June 16, 1959 W. H. DEVONSHIRE ET AL 2,891,132

ELECTRIC HOIST CONTROL

Filed Dec. 13, 1955 2 Sheets-Sheet 1

FIG. 2.

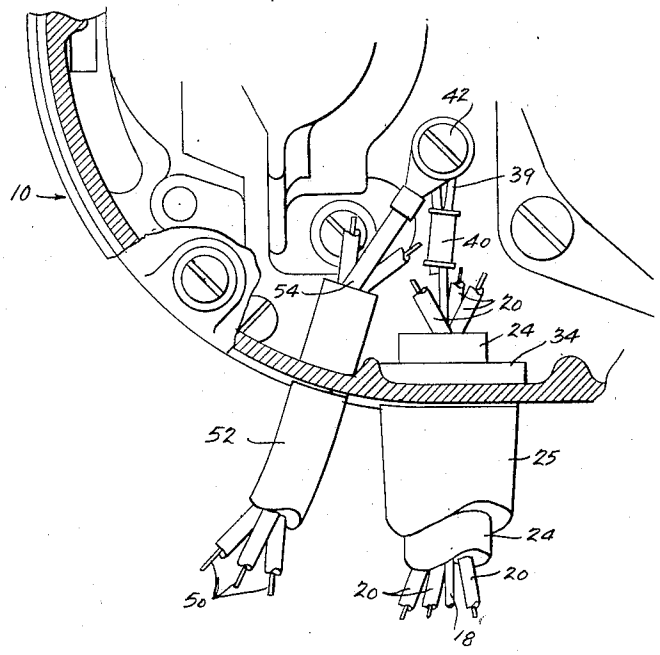

FIG. 3.

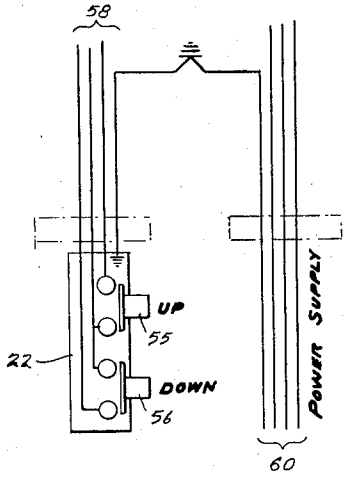

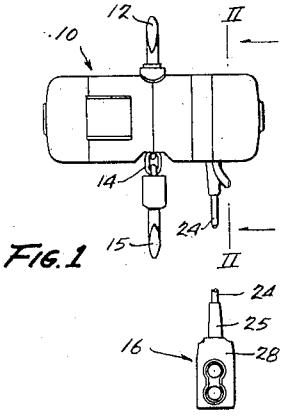

FIG. 1

INVENTORS
WILLIAM H. DEVONSHIRE
ERFORD E. ROBINS

BY

Bean, Brooks, Buckley & Bean
ATTORNEYS

June 16, 1959 W. H. DEVONSHIRE ET AL 2,891,132

ELECTRIC HOIST CONTROL

Filed Dec. 13, 1955 2 Sheets-Sheet 2

FIG. 5.

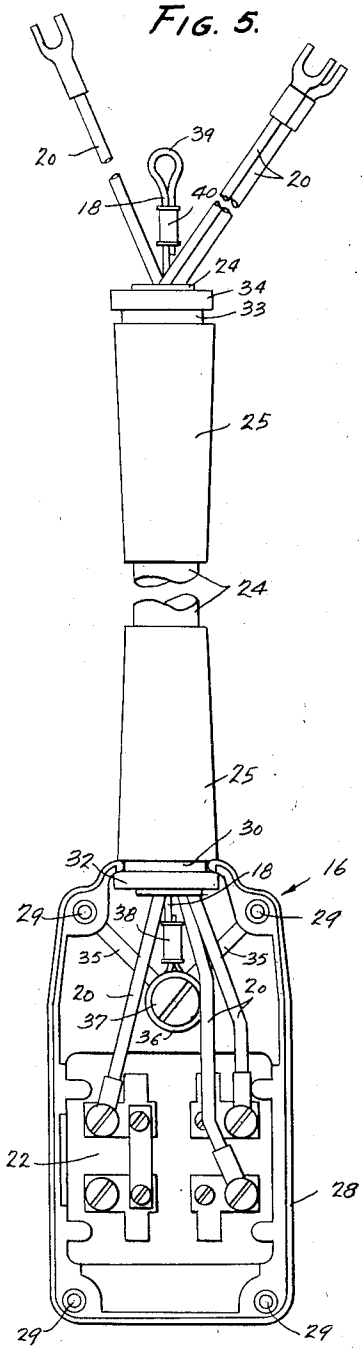

FIG. 4.

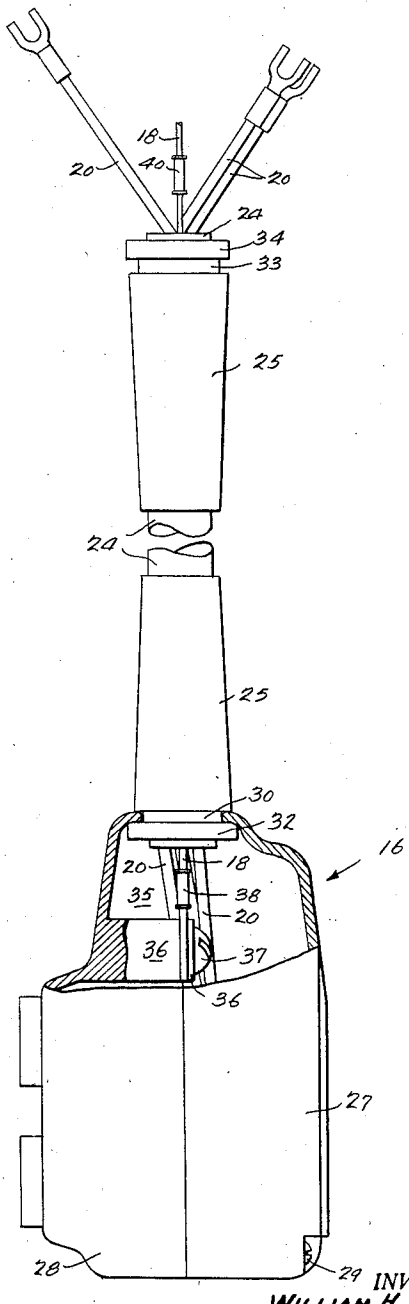

INVENTORS
WILLIAM H. DEVONSHIRE
ERFORD E. ROBINS

BY

Beau, Brooks, Buckley & Beau.
ATTORNEYS

United States Patent Office 2,891,132 Patented June 16, 1959

2,891,132

ELECTRIC HOIST CONTROL

William H. Devonshire, Williamsville, and Erford E. Robins, North Tonawanda, N.Y., assignors to Columbus McKinnon Chain Corporation, Tonawanda, N.Y.

Application December 13, 1955, Serial No. 552,936

1 Claim. (Cl. 200—168)

This invention relates to electric hoists, and more particularly to improvements in electric power supply and electric control devices and connections thereof to the hoist frame.

It is an object of the present invention to provide an improved push-button station which is suspended from the hoist frame by means of a tension member embodied interiorly of the electric control cable unit extending from the hoist frame to the push-button station.

Another object of the invention is to provide in an electric hoist improved means embodied in the hoist frame for anchoring a plurality of tension members extending from the hoist frame coincidentally with power supply and control cables as are requisite to the operation of the hoist.

Another object of the invention is to provide an improved push-button control station for electric hoists as aforesaid, embodying means for anchoring a tension device extending from the hoist frame coincidentally with electrical conductors extending between the hoist frame and the control station.

Other objects and advantages of the invention will appear from the specification hereinafter.

In the drawing:

Fig. 1 is a small scale composite elevational view of an electric hoist and push-button control station, of the type to which the present invention is applicable;

Fig. 2 is a fragmentary sectional view, on an enlarged scale, taken along line II—II of Fig. 1, illustrating the mechanism for anchoring the power supply and control cable units in the hoist frame, in accord with the present invention;

Fig. 3 is a diagrammatic view of the electric control system of the push-button control station;

Fig. 4 is a side elevational view, on an enlarged scale, with portions shown in section, of the push-button station and cable anchoring mechanism of the invention; and

Fig. 5 is a front elevational view of the device of Fig. 4 with a cover portion removed.

The invention is illustrated in the drawing herewith as being employed in conjunction with an electric hoist mechanism including a frame **10** (Figs. 1, 2) arranged to be supported by means of a suspension hook **12** and having its load lift chain **14** terminating in a load lift hook **15**. Control of the hoist operation is provided for by means of a push-button "station" or box indicated generally at **16** which is suspended from the hoist frame by means of a flexible steel wire illustrated at **18** (Figs. 2, 4, 5). Wire **18** comprises the core of a cable assembly including the insulated electrical conductors **20—20—20** which electrically interconnect the hoist control switch block **22** (Fig. 5) and the motor control circuits interiorly of the hoist frame. The cable unit is enclosed within Neoprene rubber sheathing designated **24**, and at the opposite ends of the cable this sheathing **24** is protected by means of rugged insulative sleeves **25—25**.

As shown in Figs. 4–5, the push-button station comprises generally a two-piece molded plastic box comprising rear and cover portions **27—28** respectively, which are detachably interconnected as by means of machine screws or the like as indicated at **29**. The parts **27—28** comprise cooperative shell portions within the interior of which is mounted the switch block **22**. The upper surfaces of the shell members are provided with a circular aperture snugly embracing a peripherally recessed portion **30** of the lower sleeve **25**. Thus, the enlarged end flange portion **32** of the sleeve **25** operates to lock the sleeve to the station box. In similar manner the upper sleeve **25** is locked to the hoist frame **10**; the hoist frame being also provided with a reduced diameter aperture fitting the recessed portion **33** of the upper sleeve **25** whereby the end flange portion **34** thereof locks the upper sleeve to the hoist frame.

As illustrated in Figs. 4–5, the molded plastic box piece **28** is formed with an integral continuous flange running around the sides and top and bottom of the box piece, and a pair of diagonally extending ribs **35—35** are molded integrally with the box piece to extend from the opposite upper corners thereof and diagonally downwardly in converging relation into an integrally molded post formation **36**. The post **36** is drilled and tapped to receive a machine screw **37**, and the lower end of the tension wire **18** is locked around and under the head of the screw **37**. The wire is preferably looped and fastened as indicated at **38** to provide a firm connection where it fastens to the post **36**. Similarly, at its upper end the tension wire **18** is looped as indicated at **39** and tied by means of a fastener **40** and fixed to the hoist frame by means of a machine screw as indicated at **42** (Fig. 2).

Thus, it will be appreciated that by means of the mechanisms shown in detail of Figs. 4–5, a particularly rugged control cable and push-button station unit for electric hoists is provided. This specific combination of parts provides excellent electric shock protection for the operator inasmuch as nothing metallic can possibly join him to the hoist frame. At the same time the cable reinforcement devices **25** lock to the push-button box and to the hoist frame respectively; while the steel cable firmly interconnects the hoist frame and the switch box, whereby the operator may pull upon the switch box at will without danger of damage to the box and cable mechanism, or to the electrical connections involved. As is well known in the art, it is common for operators of electric hoists mounted on traveling tracks or the like to move such hoists from place to place by simply pulling upon the control switch box suspended at the end of the control cable; and the present invention provides a mechanism particularly adapted to successfully withstand such treatment.

As shown in Fig. 2, the hoist motor power supply cable, comprising conductors **50** enclosed in an insulative sheathing **52** may also be equipped with a strain relief steel wire core as indicated at **54** which may also be fastened to the screw **42** or to some other fixed portion of the hoist frame to provide firm locking of the power cable to the hoist frame. Fig. 3 illustrates diagrammatically a typical wiring system such as may be used in conjunction with the arrangement of the invention as explained hereinabove; wherein the control station provides a pair of "up" and "down" push-buttons **55—56** arranged to control conductors **58** leading to the hoist motor which is illustrated to be supplied by power conductors **60**. However, it will of course be appreciated that the invention will accommodate any other required type of switch mechanisms and control means.

Whereas, only one form of the invention has been shown and described herein, it will be apparent to those skilled in the art that the invention is not so limited but that various changes may be made therein without de-

parting from the spirit of the invention or the scope of the appended claim.

What is claimed is:

An electric hoist and operation control device comprising in combination an electric hoist frame having an aperture formed through a wall thereof, a first anchor post rigidly supported within said hoist frame adjacent said aperture, a control cable comprising a sheath of electrical insulating material, a plurality of electrical conductors enclosed within said sheath, and a pair of reinforcement sleeves mounted on said sheath adjacent opposite ends of said cable, each of said reinforcement sleeves including a peripherally recessed portion in the outer surface thereof, one of said sleeves extending through said aperture in the hoist frame and receiving adjacent portions of the hoist frame within said recessed portion, a flexible tension wire enclosed within said sheath and extending throughout the length thereof, said wire projecting within said hoist casing and being fastened to said first anchor post, the adjacent ends of one of the ends of said conductors also extending within said hoist casing and adapted to be electrically connected to hoist motor control circuitry within said hoist frame, a switch box comprising molded electrical insulating material, said switch box being hollow and having mounted therein a switch mechanism, said switch box having opening means formed therein, means extending from said switch mechanism and projecting through said opening means for manual manipulation to control the hoist operation, said switch box having an aperture formed therein, the reinforcing sleeve at the opposite end of said cable extending through said last-mentioned aperture and receiving the adjacent

portions of the switch box in the recessed portion of the sleeve, the adjacent opposite ends of said electrical conductors within the cable extending within said switch box and being electrically connected to said switch mechanism, a second anchor post rigidly secured within said switch box adjacent said last-mentioned aperture, the opposite end portion of said tension wire extending within said switch box and being attached to said second anchor post, whereby said tension wire provides a direct tension connection between the anchor post within said hoist casing and the anchor post within said switch box for facilitating pulling of the hoist casing by pulling on the switch box, said tension wire being completely insulated from the outer surface of said switch box for protecting an operator from electric shock.

References Cited in the file of this patent

UNITED STATES PATENTS

2,206,703	Lowe	July 21, 1940
2,324,791	McLaughlin et al.	July 20, 1943
2,633,519	Vance	Mar. 31, 1953
2,791,665	Baumbach	May 7, 1957

FOREIGN PATENTS

424,995	Italy	Sept. 5, 1947

OTHER REFERENCES

Publication: Robbins and Myers Bulletin No. 805A, received in U.S. Patent Office May 22, 1953, published by Robbins and Myers, Springfield 99, Ohio (pages 4–7 relied on).