May 6, 1924. 1,492,780

H. C. DAVIS

FEED WATER GREASE EXTRACTOR APPARATUS

Filed Sept. 15, 1920 2 Sheets-Sheet 1

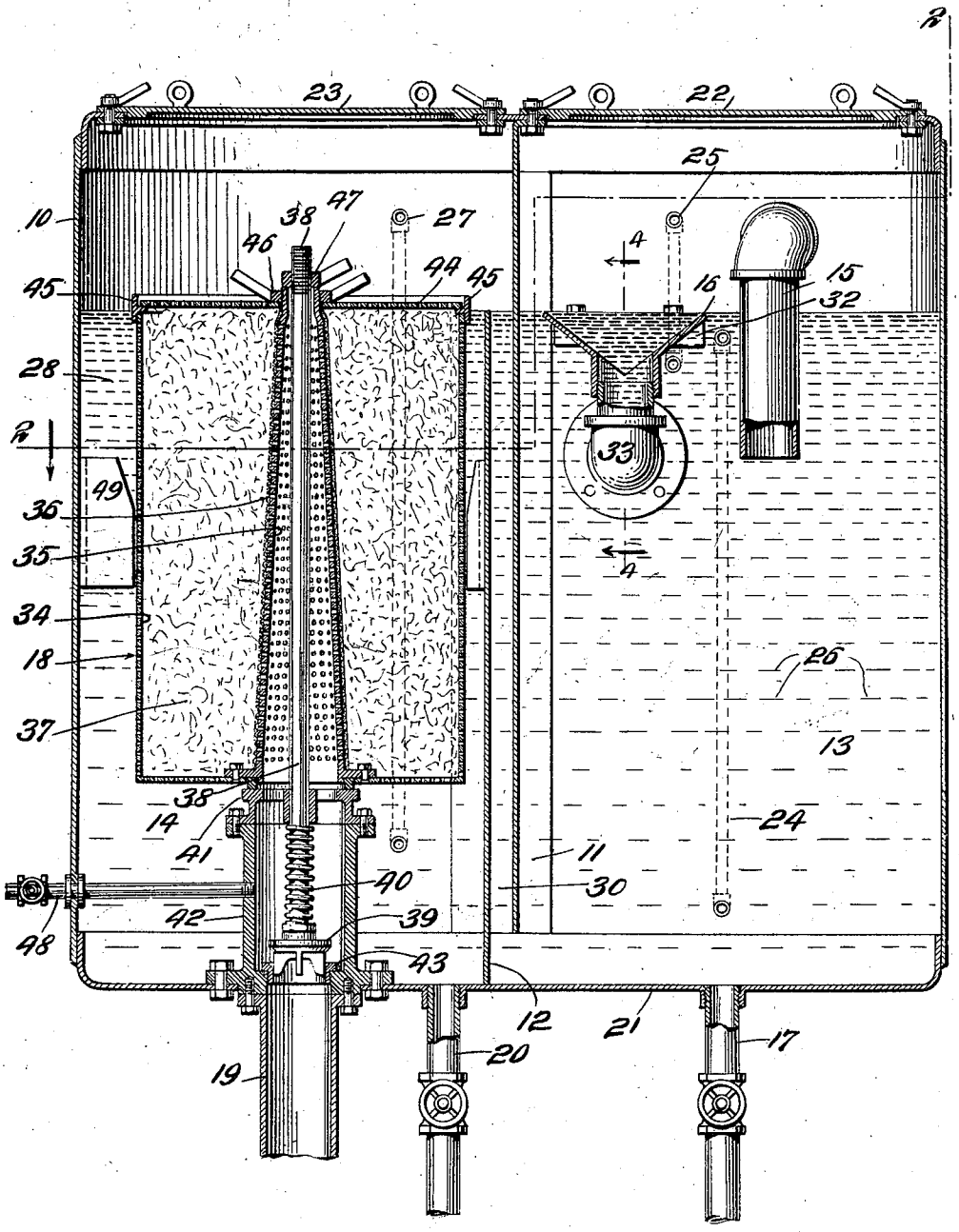

Fig. 1.

WITNESSES

Juliet H. Lutz

Arthur Marion.

INVENTOR:

HOWARD C. DAVIS,

BY

Charles C. Gill,

ATTORNEY.

May 6, 1924. 1,492,780

H. C. DAVIS

FEED WATER GREASE EXTRACTOR APPARATUS

Filed Sept. 15, 1920 2 Sheets-Sheet 2

Fig. 2.

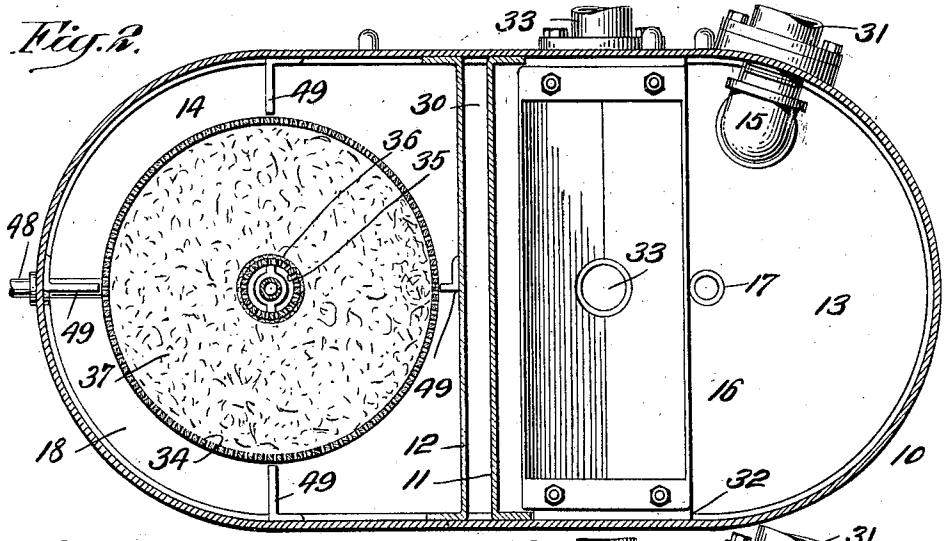

Fig. 3.

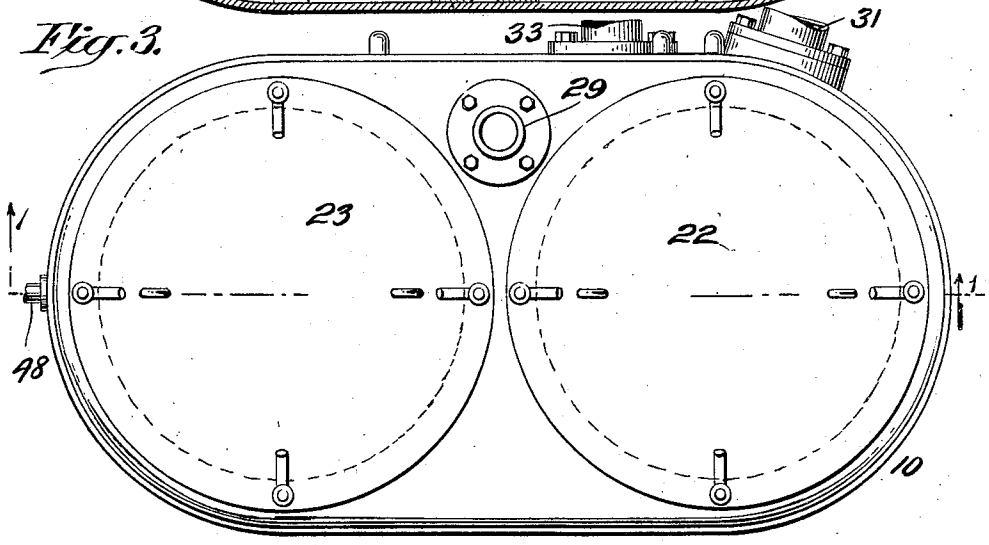

Fig. 4.

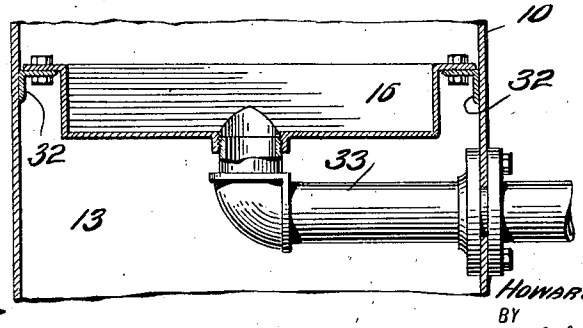

WITNESSES

Juliet Smith

Arthur Marion.

INVENTOR:

HOWARD C. DAVIS,

BY

Charles C. Gill,

ATTORNEY.

Patented May 6, 1924. 1,492,780

UNITED STATES PATENT OFFICE.

HOWARD C. DAVIS, OF ELIZABETH, NEW JERSEY, ASSIGNOR TO ROW & DAVIS, ENGINEERS, INC., OF NEW YORK, N. Y., A CORPORATION OF DELAWARE.

FEED-WATER GREASE-EXTRACTOR APPARATUS.

Application filed September 15, 1920. Serial No. 410,513.

To all whom it may concern:

Be it known that I, HOWARD C. DAVIS, a citizen of the United States, and a resident of Elizabeth, in the county of Union and State of New Jersey, have invented certain new and useful Improvements in Feed-Water Grease-Extractor Apparatus, of which the following is a specification.

It is usual on "tank steamers," so called, or oil-carrying vessels, to keep the oil in the tanks at a reasonably warm temperature by means of heater coils placed in the tanks and into and through which coils the exhaust steam from the engines or other source is caused to flow. The exhaust steam and water of condensation flowing through the heater coils become impregnated with oil or grease due to leakage or other defects in the pipes or their joints and rendered, for that reason, unsuitable for use as feed-water for the engine boilers.

One of the main objects of this invention is to extract the grease or oil from the water resulting from the steam employed in the aforesaid heater coils, so that said water may be properly used as feed-water or for other purpose. My invention involves the provision of apparatus into which the return from the aforesaid heater coils is piped and within which the grease is effectually extracted or removed from the water of condensation by mechanical means constituting portions of said apparatus, all exhaust vapor entering said apparatus being condensed therein preparatory to the removal of the grease from the resulting water of condensation. My invention prepares the water for renewed use as feed-water, and said invention, in addition to other details, comprises a receiving tank having communicating compartments, provision for gathering and removing supernatant grease from the surface of the water in one of said compartments and a special filter in the adjacent compartment through which the water flows by gravity to a suitable discharge and which completes the removal of the grease from the water.

The apparatus of my invention involves novel features of construction, arrangement and combinations of parts, and said invention will be fully understood from the detailed description hereinafter presented, reference being had to the accompanying drawings, in which:

Fig. 1 is a central vertical section, partly broken away, through an apparatus constructed in accordance with and embodying my invention, the section being on the dotted line 1—1 of Fig. 3;

Fig. 2 is a horizontal section through the same taken on the dotted line 2—2 of Fig. 1;

Fig. 3 is a top view of the same, and

Fig. 4 is a sectional view through a portion of the same on the dotted line 4—4 of Fig. 1, the shell of the tank being partly broken away.

In the drawings, 10 designates the tank or shell of the apparatus subdivided by vertical partitions 11, 12 into substantially equal communicating compartments 13, 14, the compartment 13 being an inlet compartment and provided with an inlet pipe 15, a scum pan 16 and a valved drain outlet pipe 17, and the compartment 14 being provided with a filter 18, a discharge pipe 19 therefrom and a valved drain outlet pipe 20.

The tank 10 will be made of sheet metal and it has a bottom 21 and two large removable cover plates 22, 23, respectively, one being over each compartment or chamber of the tank and the provision of which renders access to said compartments or chambers entirely convenient. The tank 10 is fitted, for the inlet compartment 13, with gauge glasses 24, 25, one being wholly below the level of the body of water 26 in said compartment, and the other being partly below and partly above said level, as shown in Fig. 1, and the purpose of this arrangement of said glasses being to afford the most accurate reading of the oil condition in said compartment. The tank 10 is also fitted, for the filter-compartment 14, with a gauge glass 27, whose reading will indicate the oil condition of the body of water 28 in said compartment and thereby also the condition of the filtering material. In the top of the tank 10 is provided a vent 29 (Fig. 3), which serves for both compartments 13, 14.

The partitions 11, 12 serve to partly separate the inlet and filter compartments 13, 14 from each other, and they are parallel with each other and reasonably close together, a passage 30 being left between them through which the water from the compartment 13 may flow upwardly and pass over the partition 12 into the compartment 14. The partitions 11, 12 are baffle plates and extend entirely across the tank 10, as shown in Fig. 2, and the partition or plate 11 extends downwardly from the top of the tank to nearly the bottom thereof, while the partition or plate 12 extends upwardly from the bottom of the tank to about the top of the filter 18 or to the horizontal plane of the water levels in both compartments, as shown in Fig. 1.

The inlet pipe 15 extends below the water level in the inlet compartment or chamber 13, and said pipe is connected by piping 31 (Fig. 2) with the return from the heater-coils, not shown, located in the usual oil-tanks provided on a tank-steamship or oil-carrying vessel.

The scum-pan 16 is preferably of V-shape in vertical cross section and extends across the compartment or chamber 13, as shown in Figs. 2 and 4, and is supported at its ends on angle-iron brackets 32 secured to the casing of the tank 10. The pan 16 has its open top at the water level in the compartment 13, and said pan is provided at its bottom with outlet pipe connections 33 serving as a discharge from said pan to any exterior location that may be determined upon.

Portions of the grease or oil will ascend to the top of the body of water in the compartment 13 during all the time that the apparatus is in use, and this grease or oil due to the continued flow from the pipe 15 will pass over the sides of and enter the pan 16 and be carried away by the discharge pipe connections 33, thus relieving the water from a large percentage of the grease or oil and preparing the water for further treatment by the filter 18. It may be mentioned here that exhaust vapor discharging through the inlet 15 will be condensed in the body of water 26.

The additions of water to the compartment or chamber 13 will induce a flow of the water from the bottom of said compartment up through the passage 30 and over the plate 12 into the compartment 14, within which the water will be filtered and then find its escape through the outlet pipe 19 for use as feed-water or other purpose. The weir-plate 12 maintains the water-level in the compartment 13.

The filter 18 is of special construction adapting it for the purpose of my invention and its details will therefore be at once described. The filter comprises an exterior cylindrical perforated galvanized steel container 34, an inner slotted or perforated composition cone 35 which is hollow and covered with fine mesh wire gauze 36 and a bed of cocoanut fibre 37 which fills the container 34 exterior to the cone and possesses a high affinity for oil. The container 34 will preferably be of such size that the outer strata of cocoanut fibre therein will equal more than three hundred times the area of the inlet pipe 15. The wire gauze 36 is provided to prevent any of the cocoanut fibre from passing through the cone 35 with the filtered water. The cone 35 is bolted to the perforated bottom of the container 34 over a central opening therein and houses a vertical valve stem 38 which carries on its lower end a valve 39 and a coiled spring 40 which exerts a closing force against the valve 39 and is confined between said valve and a top housing 41 therefor and through which housing the valve stem 38 passes, as shown in Fig. 1. The filtered water also passes through the housing 41, which is bolted upon a main hollow housing 42 which affords a commodious chamber for the flowing filtered water and also for the spring 40, valve 39 and seat 43 for said valve. The housing 42 communicates with the outlet pipe 19 for filtered water and which will lead to a reserve tank or reserve tanks for the water.

The upper end of the container 34 is closed by a perforated disk or plate 44 which is seated on an inner annular flange of a band 45 secured around the upper edges of the sides of the container, as shown in Fig. 1, and said disk 44 receives at its center the upwardly projecting end of the cone 35 and is removably clamped down on its seat by a nut 46 which engages said cone.

The valve stem 38 projects upwardly above the cone 35 and receives on its threaded upper end a handle-nut 47 which engages the upper edge of said cone and when worked downwardly against said edge serves to draw the valve rod or stem 38 upwardly and thereby compress the spring 40 and hold the valve 39 in the open position in which it is shown in Fig. 1, said valve always remaining open during the operation of filtering the water. The spring 40 will also firmly hold the valve 39 on its seat when permitted so to do, as when the handle-nut 47 is worked upwardly on the upper threaded end of the valve stem or rod 38 to permit said stem or rod to descend under the expansive force of said spring. The spring 40 performs the further important duty of clamping the container 34 down upon its seat on the top housing 41. When it is necessary ultimately to refill the container 34 with the fibre or filtering media, the handle-nut 47 will be slacked off from the valve stem or rod 38 and thereupon the valve 39 will automatically close and the container may be removed through the top of the tank

if necessary, the cover plate 23 being removed for that purpose. It is desirable that a spare filter be carried to be installed in the compartment 14 whenever it should become necessary to remove the filter therefrom for the refilling of the container or for other purpose. The provision of the large cover plates 22, 23 permits ready assembly of the interior parts of the compartments 13, 14.

The drain pipes 17, 20 are provided to facilitate the cleaning out of the compartments 13, 14.

It is desirable to boil out the filtering material in the container 34 when the same becomes foul, and to this end I provide a steam connection 48 which enters the chamber of the housing 42 above the valve 39. On ceasing the filtering operation, opening the drain pipe 20 and closing the valve 39, steam may be admitted to the housing 42 and interior of the cone 35 for boiling out the filtering material, the oil or grease being forced therefrom outwardly through the perforated walls of the container 34 and finally run off through the drain pipe 20.

The compartment 14 is equipped with rigid plates 49 for centering the container 34 and aiding in maintaining the same in correct position.

The operation of the apparatus will largely be understood from the description hereinbefore presented. The compartments 13, 14 may be primarily filled with water to the proper level or this body of water may result from the water of condensation. The exhaust steam from the heater coils in the oil tanks enters the compartment 13 below the water level therein and the plate 11 serves to confine as far as possible the entrained oil or grease to the compartment 13 so that the same may ascend through the water and flow into the scum-pan 16 and be carried away through the discharge connections 33. The partly cleansed water flows over the weir-plate 12 into the compartment 14 and becomes filtered by passing through the bed of filtering media held by the container or shell 34, said water passing into the cone or equivalennt hollow perforated core 35 and flowing thence to the delivery outlet pipe 19 for filtered water.

What I claim as my invention and desire to secure by Letters Patent, is—

1. Apparatus of the character described comprising a tank containing a body of water, means for adding thereto accumulations of water arising from condensed steam, a hollow housing secured on the bottom of said tank and affording a valve seat and being connected with the discharge for filtered water, an upper housing secured on said hollow lower housing and affording a guide for a valve-rod, a valve adapted to said seat, a valve rod extending upwardly from said valve, a spring on said rod acting to force the valve to said seat, a filter submerged in said body of water and seated on said upper housing and comprising a hollow perforated core up through which said valve rod extends and from which the filtered water issues, an exterior perforated container having a bottom to which said core is secured and a removable top plate and a filling of filtering media within said container exterior to said core, and a nut on the upper end of said rod and engaging the upper end of said core for maintaining the filter on its seat and said valve normally open in opposition to the force of said spring.

2. Apparatus of the character described comprising a tank containing a body of water, means for adding thereto accumulations of water arising from condensed steam, a hollow housing secured on the bottom of said tank and affording a valve seat and being connected with the discharge for filtered water, an upper housing secured on said hollow lower housing and affording a guide for a valve-rod, a valve adapted to said seat, a valve rod extending upwardly from said valve, a spring on said rod acting to force the valve to said seat, a filter submerged in said body of water and seated on said upper housing and comprising a hollow perforated core up through which said valve rod extends and from which the filtered water issues, an exterior perforated container having a bottom to which said core is secured and a removable top plate and a filling of filtering media within said container exterior to said core, a nut on the upper end of said rod and engaging the upper end of said core for maintaining the filter on its seat and said valve normally open in opposition to the force of said spring, and a nut on the upper end of said core for clamping said top plate on said container.

3. Apparatus of the character described comprising a tank containing a body of water, means for adding thereto accumulations of water arising from condensed steam, a hollow housing secured on the bottom of said tank and affording a valve-seat and being connected with the discharge for filtered water, an upper housing secured on said hollow lower housing and affording a guide for a valve-rod, a valve adapted to said seat, a valve rod extending upwardly from said valve, a spring on said rod acting to force the valve to said seat, a filter submerged in said body of water and seated on said upper housing and comprising a hollow perforated core up through which said valve rod extends and from which the filtered water issues, an exterior perforated container having a bottom to which said core is secured and a removable top plate and

a filling of filtering media within said container exterior to said core, a nut on the upper end of said rod and engaging the upper end of said core for maintaining the filter on its seat and said valve normally open in opposition to the force of said spring, and a steam inlet to said housing for use in boiling out the filtering media when desired and when said valve is closed.

Signed at New York city, in the county of New York and State of New York, this 7th day of September, A. D. 1920.

HOWARD C. DAVIS.