(12) INTERNATIONAL APPLICATION PUBLISHED UNDER THE PATENT COOPERATION TREATY (PCT)

(19) World Intellectual Property Organization
International Bureau

(43) International Publication Date
27 December 2013 (27.12.2013)

WIPO | PCT

(10) International Publication Number
WO 2013/191714 A1

(51) International Patent Classification:
A63B 69/40 (2006.01)

(21) International Application Number:
PCT/US2012/051642

(22) International Filing Date:
20 August 2012 (20.08.2012)

(25) Filing Language: English

(26) Publication Language: English

(30) Priority Data:
61/662,551 21 June 2012 (21.06.2012) US
13/587,715 16 August 2012 (16.08.2012) US

(72) Inventor; and
(71) Applicant : **ADEMA, Wayne P.** [US/US]; 771 Old Country Rd. PP, Sheboygan Falls, WI 53085 (US).

(74) Agent: **GARRELS, Mandy T.**; 529 Ontario Ave., Ste SN2, Sheboygan, WI 53081 (US).

(81) Designated States *(unless otherwise indicated, for every kind of national protection available)*: AE, AG, AL, AM, AO, AT, AU, AZ, BA, BB, BG, BH, BN, BR, BW, BY, BZ, CA, CH, CL, CN, CO, CR, CU, CZ, DE, DK, DM, DO, DZ, EC, EE, EG, ES, FI, GB, GD, GE, GH, GM, GT, HN, HR, HU, ID, IL, IN, IS, JP, KE, KG, KM, KN, KP, KR, KZ, LA, LC, LK, LR, LS, LT, LU, LY, MA, MD, ME, MG, MK, MN, MW, MX, MY, MZ, NA, NG, NI, NO, NZ, OM, PE, PG, PH, PL, PT, QA, RO, RS, RU, RW, SC, SD, SE, SG, SK, SL, SM, ST, SV, SY, TH, TJ, TM, TN, TR, TT, TZ, UA, UG, US, UZ, VC, VN, ZA, ZM, ZW.

(84) Designated States *(unless otherwise indicated, for every kind of regional protection available)*: ARIPO (BW, GH, GM, KE, LR, LS, MW, MZ, NA, RW, SD, SL, SZ, TZ, UG, ZM, ZW), Eurasian (AM, AZ, BY, KG, KZ, RU, TJ, TM), European (AL, AT, BE, BG, CH, CY, CZ, DE, DK, EE, ES, FI, FR, GB, GR, HR, HU, IE, IS, IT, LT, LU, LV, MC, MK, MT, NL, NO, PL, PT, RO, RS, SE, SI, SK, SM, TR), OAPI (BF, BJ, CF, CG, CI, CM, GA, GN, GQ, GW, ML, MR, NE, SN, TD, TG).

Declarations under Rule 4.17:

— *as to applicant's entitlement to apply for and be granted a patent (Rule 4.17(ii))*

— *as to the applicant's entitlement to claim the priority of the earlier application (Rule 4.17(iii))*

— *of inventorship (Rule 4.17(iv))*

— *as to non-prejudicial disclosures or exceptions to lack of novelty (Rule 4.17(v))*

Published:

— *with international search report (Art. 21(3))*

WO 2013/191714 A1

(54) Title: A SOCCER TRAINING DEVICE, METHOD OF USE AND SYSTEM

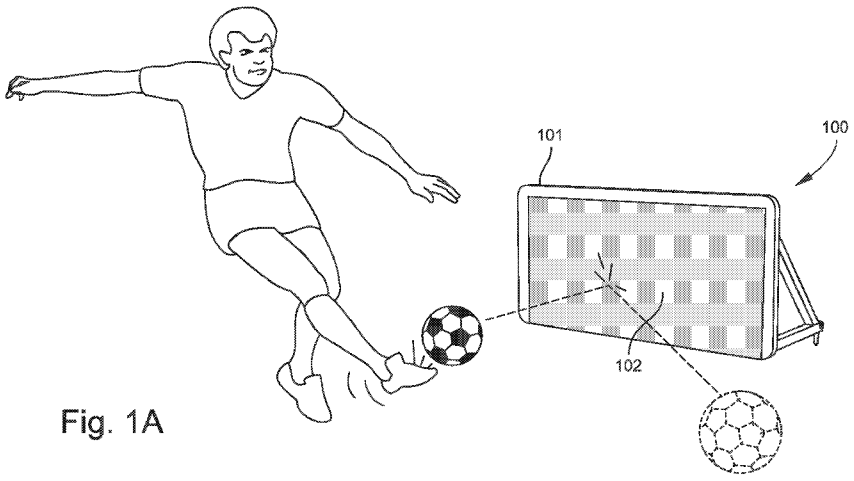

Fig. 1A

(57) Abstract: An invention directed to a soccer training device, module training system and method of use. The device is a deflection wall that may be portable or permanently affixed to a ground surface. The wall having a larger and smaller embodiment, mimicking the silhouette of a soccer goal or an average player of a given age range from a far distance at simulated closer range. The inventive features of the wall intended to enhance quantity, quality, speed, and accuracy of interaction and perception between the user, the ball and the wall according to professional quality and professional level training techniques.

A SOCCER TRAINING DEVICE, METHOD OF USE AND SYSTEM

INVENTOR:

Wayne P. Adema
771 Old County Rd. PP
Sheboygan Falls, WI 53085

Citizenship: UNITED STATES

A SOCCER TRAINING DEVICE, METHOD OF USE AND SYSTEM

By Wayne Adema

FEDERALLY SPONSORED RESEARCH OR DEVELOPMENT

[0001] Not applicable.

CROSS REFERENCE TO RELATED APPLICATIONS

[0004] This non-provisional utility patent application incorporates by reference the earlier filed provisional patent application, Application No. 662,551, in its entirety. This non-provisional patent application claims benefit of said copending provisional patent application, effectively filed on June 21, 2012, pursuant to 35 U.S.C. 119(e) and 37 C.F.R. 1.78 (a)(4) – (a)(6) and all other relevant sections of the law not referred to herein.

REFERENCE TO SEQUENCE LISTING, A TABLE, OR A COMPUTER LISTING APPENDIX

[0012] Not applicable.

COPYRIGHT NOTICE

[0015] A portion of the disclosure of this patent document contains material that is subject to copyright protection. The copyright owner has no objection to the facsimile reproduction by anyone of the patent document or patent disclosure as it appears in the Patent and Trademark office, patent file or records, but otherwise reserves all copyright rights whatsoever.

BACKGROUND OF THE INVENTION

FIELD OF THE INVENTION

[0023] The present inventive subject matter relates to a soccer training device, a soccer training system and a method of use.

BACKGROUND

[0030] Mastering the game of soccer requires the mastery of one's own body and eye coordination. It is a contact sport where a player's entire body must be intuitively responsive to the ball on the field at any particular time or location. The player's muscles must react reflexively to the field and all things within as though they are extensions of his own body. Professional soccer players spend tremendous amounts of time conditioning their bodies to achieve a level of muscle memory and intuition that makes their movement on the field second nature and fluid. While actual practice is the only way a player can improve his or her skill, the quality and amount of practice determines the rate of actual improvement. In order for any individual to propel themselves to the next level of skill in the game of soccer, they must dedicate sufficient time on the field and off the field to constant muscle training. Soccer being a high contact sport requires equipment and training techniques that simulate a multi-player environment that provides constant dynamic contact.

[0042] Mastery of the game requires repetitive training to develop speed and control over the ball and the player's ever changing environment. Improvement of skill requires exposure to new complex variables and the opportunity to practice controlling and overcoming such variables. Variables in the game may be any element in the environment that changes the position of the ball, the player or the team's advantage. Variables may become more complex as more players are involved in a particular game. They may still be complex between fewer players if the skill level of each player enables them to each possess greater control over the ball. It is the aspiration of any soccer player to develop advanced level of skill such that the individual can act and strategize offensively or defensively to capture and maintain control over the ball in any fast paced scenario. To achieve this beyond a team training effort, through individual training, a player must be able to simulate realistic multi-player conditions to create the types of variable challenges encountered on the field during a fast paced game. For a player to develop his or her skills at professional quality level, the player must train and hone his or her skills to the true parameters of the game. High amounts of repetitious training in a simulated dynamic environment will enable any individual player to develop professional level precision, speed and agility that can be translated onto the field in any live match.

[0059] The ideal training device and system should be true to the parameters and dimensions of the game. Such parameters include but are not limited to the following: spatial limitations, area of control over the ball within the player's environment, high paced interaction between multiple players, dynamic changing environment from high speed movement of players on the field, intense competition between players to control the soccer ball, spatial spread of players on a field in the course of a game, necessary levels of accuracy in aim for passing and shooting the ball, standard positioning of soccer field components such as the goal posts or other players, quality and types of interaction between the player and different elements on the field (spinning the ball, passing the ball between players, etc.), material composition of equipment (rubber soles of shoes and the ball), visual effects from the field environment and components within (white or metallic soccer goals, green sod for outdoor soccer field, tan wooded floors of indoor soccer arena), etc. The ideal training device and system would manage and control the scope of variables so that the user can recreate and repeat training, or scale the variables down to focus on specific sets of variables. The device and system would evolve with the user by enabling the user to introduce new challenges or variables at various stages of improvement. All the while, such a device should remain useful and relevant to users of all skill level. The ideal device should enable an individual user to achieve high amounts of repetitious contact with the ball, achieve high speed multidirectional movement and tight ball control, train to the true parameters of the game, and develop multiple skills in tandem as would be expected from a multi-player training environment.

[0079] Current products in the market that offer individualized repetitive training fail to reflect real parameters and challenges experienced on the field specific to the sport of soccer. These products are easily outgrown due to their limited usefulness relative to the long term needs of aspiring soccer players. The following summarizes current soccer rebound devices designed primarily for kick training. Their deficiencies and limitations are inherent in their designs, offering limited practical use to serious trainers. U.S. Patent No. 5556104 provides a training device with multiple functions on multiple sides. The problem is that each functional side interferes with the usefulness of the other feature during training. Further, the device is not constructed in a manner that when positioned on the ground with the board surface side facing forward, would maintain stability against frequent high impact contact with a soccer ball.

[0090] U.S. Patent No. 4650189 is a rebound net assembly intended for softball or baseball pitch training. Not only are there too many parts to this device making it difficult to transport, but the net feature is not ideal for soccer training purposes since it cannot replicate a deflection similar in feel and quality to that of a professional soccer player. Further, the surrounding frame protrudes from the overall wall surface, creating interaction with the ball that is not otherwise experienced in reality. The device also lacks a self-stabilizing component that allows it to withstand the full impact of repeated impact of a high speed soccer ball.

[0098] U.S. Patent Application No. 2005012125A1 provides a device with multiple paneled sides that requires assembly to be functional. The design of this device prevents it from being staked or anchored to the ground for added stability. The weight of water or sand filling its cavity is insufficient to stabilize the device against frequent high impact of a soccer ball by serious trainers. Further, the size and shape of the device does not reflect the natural coverage of an opposing player's silhouette. Thus accuracy and precision of the player would be disproportionately skewed to the disproportionate size of the device over time and use.

[0106] The device of U.S. Patent Application No. 20020022540 A1 takes up a great amount of space on the field with its multi-panel construction. This device is very one dimensional in that, despite the multi-panels involved and the ability to have multiple users train at once, players are restricted to using one panel at a time and cannot train interactively with other players.

[0111] U.S. Patent No. 7909330 comprises a hollow base requiring filler, such as water or sand, to create stabilizing weight. As stated before, the design is inconvenient and unstable for the quality and amount of ball to wall impact sought to be achieved by serious trainers.

[0115] U.S. Patent No. 6935971 provides another rebound panel made of netting. A great deal of assembly is required and the device is not easily transportable. As with other netted devices, the frame surrounding the four sides of the device interferes with the ball's trajectory path and the interaction of the ball with the rebound surface.

[0119] U.S. Patent No. 4284277 describes a kick ball game and apparatus kit that may be used indoor or outdoor, played similarly to soccer or hockey but does not require special skills from the

players. This patent provides for an interesting method of arranging players of the game with predefined rules of operation. This patent is not intended as a soccer training method or apparatus and does not function as such.

[0125] A considerable need remains for inventive solutions that improve upon the quality of soccer training devices, methods and systems. All patents and applications referred herein are incorporated by reference in their entirety. Furthermore, where a definition or use of a term in a reference, which is incorporated by reference herein, is inconsistent or contrary to the definition of that term provided herein, the definition of that term provided herein applies and the definition of that term in the reference does not apply.

SUMMARY OF THE INVENTION

[0133] The invention herein achieves a quality and type of professional grade training never seen before for individualized soccer training. The award winning professional level skill and experience of the inventor as both a lifetime soccer athlete and coach has enabled the inventor to gain the proper insight to develop a device and system that offers these combined training features in an elegant and effective way. The goal of this invention is to enable an individual user to achieve high amounts of repetitious foot training, practice high speed multi-directional movement while maintaining tight control over a soccer ball, develop accurate aim, perception and intuition for the true parameters of the game, and eventually learn to strategize and control both the ball and the player's unpredictable environment. These goals are achieved by the unique design and training method described as follows.

[0144] The invention herein makes optimal use of material and design by improving on the following features: choice of material composition of the device to enhance realistic simulated interaction between the ball and user, effective use of exposed surfaces on the device to maximize interaction, ergonomic design to avoid unwanted secondary interactions (e.g., no protruding attachments from the wall such as nuts and bolts to avoid unnatural deflection of the ball from the wall, no extra framing, etc.), dimensional considerations so as to simulate true distance and size parameters between the players on a field, compressed dimensional features to encourage high speed proximate interaction, choice of color to condition the user's depth and peripheral perception,

minimization of secondary distractions not natural to the game (such as loose rattling or reverberation), simulation of multi-player environment by modularizing the device which encourages high speed multidirectional interaction and control, consideration of distance between devices within a given module specifically to train passing techniques according to best practice for professional quality soccer training, adjustability of modules to control complexity and allow for personalized training.

[0159] The device described herein is a soccer deflection wall. Each wall is comprised of one or more panel and a supporting unit. Each said panel may be embodied in the shape of either a square or rectangle but is not limited to these described shape embodiments. The panels having rounded exposed corners to minimize wear and tear on a deflecting ball and to mimic the interaction of a ball against the curve of a player's foot. The word exposed hereinafter will mean any surface that is open and unobstructed from the general field environment such that said surface may have direct contact with a traversing ball approaching or deflecting from said surface. All exposed surfaces of the device that may serve to deflect the soccer ball should be completely even without protrusion, introverted contours, recesses, cracks or crevices, holes, extensions, etc. Protrusions from exposed surfaces such as bolts and frame attachments or crevices and cavities could cause unnatural deflection of the ball and risk expensive damage to the impacting ball. The dimension of the wall (vertical length and horizontal width) should simulate the proportional perspective of a far distant silhouette of a player of a given age range or goal post from close proximity. The device may be scaled up or down to the relative size of the user to achieve the intended purpose. For example, infant children approximately three years of age may require smaller versions of the device to achieve the same goals achievable by this invention. The reason for this preferred size dimension is to encourage accuracy of aim and perception within a compressed environment but to the true dimensions of opposing players at a distance on the field.

[0178] Each panel should have an exposed main surface, a back surface and side edge surfaces. The surfaces are substantially smooth with no attachments or cavities on the exposed portions. The main surface should have a perimeter border that is preferably white or metalic in color, the total combined surface area of the perimeter border comprising less than fifty percent of the surface area of said exposed main surface. The remaining interior portion should have a color similar to a standard soccer field or arena. The typical color of a standard outdoor soccer field is green for sod

grass, typically beige for indoor wooded floor panels and occasionally green for painted indoor soccer arenas. The reason for this color combination and pattern is to train the user's sense of perception and intuition to the standard effects of the game.

[0188] The exterior panel surface is comprised of a semi-viscous and semi-flexible material similar to rubber, latex or neoprene to create a dampening and gripping effect that is consistent in wet and dry conditions. The slight gripping effect or viscosity of the rubber like substance on the surface of the panel enables the user to manipulate the ball against the panel to create unique deflection and aim that may be recreated between multiple live players. The gripping effect is similar in texture and durability to a typical soccer player's shoes. The interior material composition of each panel would preferably be comprised primarily of wood, wood composite (or stiff organic fiber material such as bamboo) for its hardness and unique low reverberation effect. Reverberating sound from a surface upon impact can be a distracting element leading to unwanted sensory conditioning. Alternative solid material may be used interchangeably and should be sufficiently dense to enhance the quality of deflection from the panel surface while having minimal reverberation upon impact. The slight dampening effect particularly achieved by wood fiber material will also help limit wear and tear on the ball from extended use. Composition of the wall panel may include any of the following material and is not limited to metal, wood, foam, plastic, combinations of these materials or any future unknown material that achieves the described intended quality and purpose.

[0204] The wall is embodied in two sizes, a larger and a smaller size. The smaller size embodiment is intended to train passing skills and will be referred to as a passing wall. The larger size embodiment is intended to train shooting techniques and will be referred to as a shooting wall. A passing wall scaled to the size of an average adult player in ready position (standing with legs spread apart) would preferably have a height that is between two to three feet and a width that is approximately three and a half feet to four and a half feet. The size of the shooting wall may range between three to four feet in height and approximately six to eight feet in width, proportional to a long distance perspective of a standard goal post from within ten yard of the player. The dimensions however may be proportionally smaller in alternative embodiments to accommodate the average dimensions of very young players.

[0215] The deflection panel is connected to a support assembly for purposes of stabilizing the panel on the ground and maintaining the device in an erect vertical position during use. The support assembly may be detachable and portable or permanently affixed to the device and the ground by an anchor. Material composition of the support assembly may comprise of and is not limited to weather resistant metal, organic or inorganic fiber material or plastic.

[0221] An anchored support assembly would be connected to the panel and further connected to an anchor that is embedded beneath the field surface. The piece that connects the panel to the anchor may be detachable such that the position for the panel would be permanently fixed but the panels themselves may be removed to avoid theft or weather. When in use, the separate components of the anchor support and panel connect together to create a tight rigid immovable connection. The sturdiness and rigidity should have no secondary affect (i.e. rattling, budging movement, etc.) upon rapid frequent high impact on the panels.

[0229] A portable support assembly provides for a panel that is connected to a support unit, the support unit further connected to a portable fixturing means (i.e. spike, stake, pad, suction, pin, etc.) such that the device would not be permanently positioned in any location but may be moved and positioned anywhere feasible. Material composition of the support and fixturing means may include any of the following durable and weather resistant material such as galvanized metal, organic or inorganic fiber, plastic, etc. A preferred embodiment of the fixturing means comprising a ring or hinge connected to a flat stake (preferably triangular and flat in shape) which swivels around the axis of an axle. The axle may be a detachable rod separately connected to the ring or it may be a portion of the ring itself. The axle (essentially a thin rod) is a means for keeping the stake attached to the support to minimize spare parts. The rotating or swivel feature of the axle and stake allows the stake to swivel into position for anchoring while remaining connected to the fixture unit. The continual connection between the axle and the stake allows the fixture to remain unitarily connected to the device as it is being used and in between use during transport. The swivel feature further allows the stake to flip away from the ground surface should the device be dragged along the ground during transport, minimizing damage to the field. The fixturing means may be removable from the support assembly such that when removed, the device may be staged or stationed within an indoor arena. When in use, fixturing means would be attached to the support assembly and the stake would be inserted into the ground. The stake would rotate or flip downward towards the solid support. Upon

abutting the solid support, the stake is prevented from further movement. The abutment will occur and remain in place after the stake has penetrated into the ground surface. This stabilizes the panel and holds the entire device in rigid form against forceful frequent impact from the ball. No secondary affects (rattling, budging, etc.) should result from this manner of fixture.

[0252] Multiple units of two or more may be erected and staged oppositely in modularized fashion. The opposing distance between any two passing walls should be approximately ten yards or less for purposes of simulating true spatial parameters of the game in a compressed environment. Any distance beyond ten yards will begin to take on qualities of shooting and becomes less practical for training passing skills. The adjacent distance between the side edges of neighboring passing walls should be no less than two yards to mimic the standard minimum spread between players in the game. These distance parameters follows best practice in the industry for training professional soccer skills but have been adjusted to accommodate individual training in a compressed environment. The manipulated dimensions of the module and device is engineered and designed to react to the individual user and create a simulated effect of high speed competitive interaction between players from close proximity. Additional walls may be positioned at an angle from the parallel rows of each module. Each added device will increase complexity by introducing new variables.

[0266] Multiple modules may be staged adjacent to each other to create a personalized soccer training system. Players are able to control amount of complexity by adjusting the devices within a particular module. As the user masters a particular set of challenges within a given module, the newly acquired skills are further put to the challenge in a new environment. Progressive and controlled training through this type of modular system allows the user to become intimately familiar with otherwise unpredictable variables. This helps develop intuition in movement, speed, aim and accuracy. Mastering these basic skills allow the user to begin developing strategic control techniques. The results of which allow the user to remove some element of unpredictability from the game.

[0276] A complete modular training system may be erected within forty square yards or less, maximizing use of space and having a very small foot print on any field or arena. Portability of the

device allows anyone to design a personalized modular training system and quickly position it in any location. The shape of the device further allows for manufacturability by extrusion method.

[0281] The training device, method of use and modular training system provided herein does not exist in the art at this time. Current products within the market lack the embodiment and capability to encourage the type of professional skill development that is achievable with this invention. Other features, advantages, and object of the present invention will become more apparent and be more readily understood from the following detailed description, which should be read in conjunction with the accompanying drawings.

BRIEF DESCRIPTION OF THE DRAWINGS

[0289] The present invention is illustrated by way of example, and not by way of limitation, in the figures of the accompanying drawings and in which like reference numerals refer to similar elements. Unless otherwise indicated illustrations in the figures are not necessarily drawn to scale.

[0293] FIG. 1A A front view of a panel of the device according to one embodiment of the invention described herein, the device not drawn to exact scale or perspective.

[0296] FIG. 2 A side view of a panel of the device comprising two panels and a support according to one embodiment of the invention described herein, the device not drawn to exact scale or perspective.

[0300] FIG. 3 A side view of an alternative embodiment of the device described herein, the device not drawn to exact scale or perspective.

[0303] FIG. 4 A three dimensional view from the back of an alternative embodiment of the device comprising one panel and bracket support assembly, the device not drawn to exact scale or perspective.

[0307] FIG. 5A, 5B, 5C A three dimensional exploded view of the fixturing means of the support mechanism of the invention described herein, the device not drawn to exact scale or perspective.

[0309] FIG. 6A, 6B A three dimensional exploded side view of the fixturing means of the support mechanism of the invention described herein, the device not drawn to exact scale or perspective.

[0312] Fig. 6C A three dimensional side view of one embodiment of the invention according the description herein, the device not drawn to exact scale or perspective.

[0315] FIG. 7A A front view of the device in a generic embodiment according the description herein, the illustration is not drawn to exact scale or perspective.

[0318] FIG. 7B A side view of a preferred embodiment of the device according the description herein, the illustration is not drawn to exact scale or perspective.

[0321] FIG. 7C A side view of a preferred embodiment of the device according the description herein, the illustration is not drawn to exact scale or perspective.

[0324] FIG. 8A A three dimensional perspective view of a module according to the description herein, the illustration is not drawn to exact scale or perspective.

[0327] Fig. 8B A three dimensional perspective view of a module according to the description herein, the illustration is not drawn to exact scale or perspective.

[0330] Fig. 9 A three dimensional perspective view of a module according to the description herein, the illustration is not drawn to exact scale or perspective.

[0333] Fig. 10 A top plan view of a module according to the description herein, the illustration is not drawn to exact scale or perspective.

[0336] Fig. 11 A top plan view of a module according to the description herein, the illustration is not drawn to exact scale or perspective.

[0339] Fig. 12 A top plan view of a module according to the description herein, the illustration is not drawn to exact scale or perspective.

[0341] Fig. 13 A top plan view of a complete modular training system according to the description herein, the illustration is not drawn to exact scale or perspective.

DETAILED DISCRIPTION OF THE PREFERRED EMBODIMENTS

[0346] Reference will now be made in detail to exemplary aspects of the present invention which are illustrated in the accompanying drawings. Wherever possible, the same reference numbers will be used throughout the drawings to refer to the same or like parts.

[0350] Figs. 1A and 1B provide a general embodiment of the device, a deflection wall. The device in Fig. 1A and 1B is not drawn to scale and represents a generic illustrated description of the claimed features. Fig. 1A is a front view of the device, a deflection wall 100 comprising one panel 101 and having a preferred rectangular shape. Fig. 1A illustrates an exposed front surface 102 of the panel. The front surface 102 being flat and smooth, containing no attachments or cavities that would interfere with the interaction with the ball. Fig. 1B illustrates a side view of the panel, having an exposed front surface 102 with greater surface area than the exposed side surface of the surrounding edge 103a, b. The corners 104 of the panel would preferably be soft and curved such that deflection of a ball from said corner would closely simulate a ball being kicked from the curve of a person's padded shoe as opposed to a hard jagged surface. The curved or rounded corners 104 further minimize wear and tear on a ball typically experienced with sharp or jagged edges.

[0362] As stated above, the device may be embodied in two preferred sizes. A larger size according to Fig. 2B defined as a shooting wall 200, and a smaller size according to Fig. 2A defined as a passing wall 201. The shooting wall having a dimension proportional in perspective to a standard soccer goal post frame from a far distance; preferably between three to four feet high 202 and approximately six to eight feet wide 203. The passing wall would preferably be approximately two to three feet high 204 and three and a half feet to four and a half feet wide 205, simulating the silhouette of an average adult soccer player standing in ready position with legs spread apart. The two sizes may be scaled down to the proportional dimensions of average users of a particular age range such as shorter youth players or smaller infant-children players. The panel is placed on its widest side surface 103a directly on and perpendicular to the ground during use. The panel surface is comprised of a thick, semi-flexible and semi-viscous material similar to rubber or neoprene. The

panel surface may be textured to enhance grip over the ball but should not have substantial grooves, cavities or raised features otherwise interfering with simulated ball interaction. The interior of the panel, substantially comprised of any solid material such as but not limited to wood, plastic, glass, metal, foam, carbon fiber or any combination each. The interior composition of the preferred embodiment would be comprised of wood or wood composite material.

[0379] Fig. 2 illustrates an alternative embodiment of the deflection wall 200 having two panels 201. Each panel according to this side view illustration having one exposed front or main surface 202, a substantially exposed side edge surface 203 (all but the bottom which is in contact with the ground) and an obstructed back surface 204 (facing a central stabilizing unit and the second panel). This alternative embodiment is fully usable from both sides 202 of the device. As stated above, the device may have one or more panels 201, each panel having one or more exposed surface 202. Therefore, the device may have a multiplicity of panels 201 or exposed surfaces 202. Fig. 2 illustrates the device relying on an anchor support assembly 205 (generally illustrated in the drawings).

[0389] Fig. 3 illustrates an alternative embodiment of the device 300 having one panel 301 attached to an anchor 302 support assembly (generally illustrated in the drawings). Fig. 3 illustrates a side view of this embodiment of the device demonstrating the support 302 connected to the back surface 303 of the panel 301, the support detachably connected to an anchor portion below the ground surface (not shown) such that the panel 301 is stabilized in an erect position above ground and ready for use. One or more support or support components 302 may be connected to a particular panel 301. The need for more would depend on the size and composition of the panel design or the ground surface composition. The embodiment of Fig. 3 illustrates one of many potential manner of construction known in the art and should not be read in a limiting fashion.

[0399] Fig. 4, 5A and 5B illustrates another embodiment of the device 400 having one panel 401 attached to a support assembly 402. Fig. 4 illustrates a side view of this embodiment of the device in which the support comprises two angled brackets 403 each bracket connected to a fixturing means 404. The angled bracket 403 may comprise any hard weather resistant material such as but not limited to stainless or galvanized steel, durable plastic, carbon fiber or any combination of such material. The bracket may be adjustable folding towards the panel's back surface in the collapsed

position for ease of transport or be detachable from the panel piece as a separate component for transport. The support assembly 402 is not limited to an angled bracket means 403 but may include any similar manner of structural and stabilizing support of the panel 401 in a vertical upright position over a soccer field or arena.

[0410] Preferably the supporting assembly 402 would be attached to the panel 401 without holes or protrusion through any exposed surfaces of said panel 401, such as but not limited to nails and screws. Further, the connection between parts of the device 400 in whole and upon fixture to the ground surface for intended use should be substantially sturdy and having minimal movement or noise, particular upon forceful impact. Unwanted sounds or deflection interaction arising from the wall upon impact may negatively affect psychological aspects of training, resulting in secondary unwanted habits or else simply interfering with the overall focus of training. The choice of material, composition and design of attachment features, many of which are already known in the art, can be chosen to minimize this unwanted effect.

[0420] Fig. 4 illustrates the back side 405 view of an embodiment having two triangular brackets 403 attached to the back surface 405 of a panel 401. Each angled bracket 403 recessed approximately seven to ten inches inward from the edges 406a of the panel sides so as to minimize obstruction to a soccer ball trajectory path. The angled bracket 403 having a horizontal piece 407 resting above the ground surface and extends perpendicularly from the bottom edge 406b of the back surface 405 in a vertical direction. The horizontal piece 407 and a vertical piece 408 are connected by a tangential piece 409. The connection between the back wall surface 405, the horizontal piece 407 and the tangential piece 409 creating a triangular shape as illustrated in the drawings. The horizontal 407 and tangential 409 pieces preferably comprised of weather resistant metal. Fig. 6C further illustrates a portable detachable version of the angled support brackets 651 wherein the brackets 651 may be attachable and detachable by a spring lock or clip mechanism 652.

[0432] A fixturing means 500 according to Figs. 5A, 5B and 5C is connected to the joint end 501 where the horizontal piece 502 and tangential piece 503 meets. An exploded view of the fixturing means 500 as illustrated in Figs. 5A, 5B and 5C comprising a flat triangular wedge 504 whose wider end 505 contains a hollowed sleeve or tubular portion 506 (shown in part) within whereby a link or thin axle rod (or any equivalent thereof) (not shown) is slid through said sleeve such that the wider

side of the wedge swivels around the link or rod 507. The fixturing means 500 is connected to the horizontal piece 502 at the joint end 501 such that it may swivel around the axis of the horizontal piece. When in use according to Figs. 6A and 6B, the pointed end 601 of the flat wedge 602 is positioned downward perpendicular to the ground surface and perpendicular to the cross section of the horizontal piece 603 at the joint end 604. The wedge is then driven into the ground with the flat side buttressing or abutting a blunt end (see Fig. 5A, 509) of the horizontal piece 603. The abutment of the flat wedge 504 against the blunt end 509 of the horizontal piece 502, as illustrated in Fig. 5A, prevents the wedge from rotating further along the axle rod thus stabilizing the device against forceful impact.

[0447] Fig. 7A, 7B and 7C illustrating the exposed front or main surface 703 of a preferred embodiment of the device 700, 701, 702. Figs. 7B and 7C illustrating a larger 702 and smaller 701 sized version of the panel device 700. The devices are not drawn to exact scale but are drawn to relative scale as intended for an adult user and a standard goal post. The exposed front panel 703 having soft rounded or curved corners 704, a white colored border 705 comprising less than fifty percent of the surface area of the exposed main surface 703, the central area or portion 706 of the exposed main surface within the perimeter of the white border 705 having a color mimicking a real soccer field or arena such as tan, beige, brown or green.

[0456] Fig. 8A illustrates a soccer training module 800 comprising two smaller passing walls 801 wherein each respective exposed main or front surface 802 is positioned directly opposite from each other. Figure 8B illustrates an alternative embodiment of a two passing wall 801 module 805 that is spaced further apart. Variations in the distance between passing walls will vary but should be ten yards distance or less as a rule for purposes of mimicking actual distance between players within close practical passing range according to standard practice in the game of soccer. This range of distance further facilitating and encourage rapid, high repetition passing interaction between the player and the passing walls. Figures 8A and 8B are not drawn to scale or perspective.

[0465] Fig. 9 illustrates a more complex soccer training module 900 having three passing walls 901and one shooting wall 902, whose exposed main surfaces 903 are centrally facing wherein the combination of panels are oriented to create a rectangular or square pattern. This configuration and

other module configurations may be embodied in permanent attachments to the ground surface by way of an anchor support assembly or system. Fig. 9 is not drawn to scale or perspective either.

[0472] Fig. 10 illustrates an even more complex embodiment of a soccer training module 150 having eight permanently positioned devices 151a, b, c with two additional portable devices 152 in angled positions. This embodiment of the module having three pairs of passing walls 151b, c and one pair of shooting walls 151a, simulating a complete multiplayer game environment. The three pairs of passing walls 151b, c are positioned opposite to each other in parallel form, with two rows of three passing walls 151b, c. The pair of shooting walls 151a is positioned opposite each other between the two rows of passing walls 151b, cand at each ends of the two rows. The eight walls 151a,b,c forming a rectangular shaped module 150. The distance between the exposed main surfaces of the two rows of passing walls 151a,b,c (along the length of the rectangle between exterior surfaces of the two opposing walls) is approximately eight yards. The distance between the exposed main surface 154 of the opposing shooting walls 151a is approximately 32 yards. The distance between adjacent passing walls within a given row (from side edge 155 to side edge 155) is approximately two yards or greater. Fig. 11 illustrates an alternative embodiment of a complete field module 250 with six permanently fixed devices 251a,b,c and two portable devices 252 in an angled position. The distance between side edges 253 of the passing walls within the same row 250a,c remains at least two yards of separation at a minimum, mimicking the natural minimum spread between players in actual play according to standard practice and training of the game.

[0490] Fig. 12 illustrates three circular modules 350, each module containing eight passing walls 351, the exposed front surface of each passing wall 352 centrally facing the same central radial point to form a substantially circular or oval pattern. The distance between side edges 353 of the passing walls remains at least two yards of separation at a minimum, mimicking the minimum natural spread between players in actual play according to standard practice and training of the game.

[0496] Fig. 13 illustrating one embodiment of a complete soccer training system 450 having nine sets of modules (451, 452, 453, 454, 455, 456, 457, 458, 459 of progressive levels of complexity. The first six sets of modules (451, 452, 453, 454, 455, 456) representing the least complex types, each containing two passing walls. The distance between the exposed front surface of the opposing passing walls within each of the first six modules are as follows: Module 1 (451) = 10 yard; Module

2 (452) = 9; Module 3 (453) =8; Module 4 (454) = 7; Module 5 (455) = 6; Module 6 (456) = 5. These distances reflect the closest range of separation between players in passing position in actual play according to standard practice and training within the game of soccer. Any distance further than 10 yard would require shooting of the ball and detract from training passing techniques.

[0507] Modules 6 (457) and 8 (458) of Fig. 13 represents the next progressing levels of modular complexity. These two sets each contain four permanent devices with three passing walls and one shooting wall. Both module units contain three passing walls and one shooting wall. The dimensional requirements of Module 7 & 8 are as follows: two passing walls in opposing position with the respective exposed surfaces separated by approximately seven yards distance; one passing wall perpendicularly positioned 460 between the two passing walls at approximately two yards distance between side edges 461; a shooting wall perpendicularly positioned relative to the two opposing shooting walls on the opposite end from the perpendicular passing wall 460; the shooting wall separated from the perpendicularly positioned passing wall 461 at approximately 14.13 yards distance. Portable devices or walls may be added to existing permanent modules to increase complexity of training.

[0519] The last module 9 (459) of this system 450, is substantially similar to the complete field module described in Figs. 10 or 11. Alternative modular embodiments, such as the type described in Fig. 12, may be added or substituted for any of the modules described within Fig. 13. The described training system and modules described above may be reconfigured to add extra levels of complexity by adding more devices at desired position on an existing modular environment. Alternative embodiments of the system may comprise less numbers of module units or fewer training levels. The described training system and module units may be permanently affixed onto a dedicated field or may be transported and movable anywhere along a field. The claimed device may be manufactured with either manner of construction in mind.

[0529] Having fully described at least one embodiment of the present invention, other equivalent or alternative methods according to the present invention will be apparent to those skilled in the art. The invention has been described by way of summary, detailed description and illustration. The specific embodiments disclosed in the above drawings are not intended to be limiting. Implementations of the present invention with various different configurations are contemplated as

within the scope of the present invention. The invention is thus to cover all modifications, equivalents, and alternatives falling within the spirit and scope of the following claims.

CLAIMS

What is claimed is:

1. A soccer training device in which the device is a soccer deflection wall unit comprising
   one or more rigid panel structures,
   each panel having a width, a height and a thickness,
   each panel having external surfaces that are exposed such that the external surface is substantially open and unobstructed from the trajectory and deflection of a ball,
   each panel having exposed side edges,
   each panel having curved, rounded or soft exposed corners,
   each panel piece having a larger exposed main surface that is substantially flat and smooth,
   all exposed surfaces of each panel being smooth and having no protrusions or recesses,
   the external surface of each panel having a viscous texture with some elasticity or flexibility similar to rubber or latex,
   the panel is substantially rigid, hard, durable and weather resistant,
   the perimeter around the exposed main surface of each panel having a color similar to the frame of a goal post such as white or metallic silver,
   said white perimeter or border comprising less than fifty percent of the total surface area of the main surface,
   the remaining area within the white border of the main surface comprising a substantially green or substantially beige color scheme similar to the typical color of a standard outdoor grassy field or an indoor wood surface arena,
   the panel comprising a larger and a smaller size,
   one or more panels detachably connected to a support such that when in erect position, the exposed main surface of the panel is held upright in a substantially vertical position over the ground surface and the lineal vector direction of the panel's height bisecting the horizontal plane of the ground surface.
2. The device of Claim 1 is portable.
3. The soccer training device of Claim 1 having two categories of panel dimensional sizes, a smaller size and a larger size

the height of each smaller sized panel is substantially the height of an average user of a specified age range between the horizontal plane of said user's mid-thigh section to the horizontal plane of the ground surface.

the width of each smaller sized panel is substantially the width of an average user's silhouette with legs spread apart in a ready stance position, specifically an average user of a specified age range

the height and width dimension of each large panel simulating the far distant silhouette of a standard soccer goal post on a standard soccer field from a proximate ten yard distance to the user.

4. The soccer training device of Claim 3 wherein the larger sized panel having a dimension proportional in perspective to a standard soccer goal post frame from a far distance, preferably between three to four feet high and approximately six to eight feet wide,
5. The soccer training device of Claim 3 wherein the smaller sized panel approximately two to three feet high and three and a half feet to four and a half feet wide, simulating the silhouette of an average adult soccer player standing in ready position with legs spread apart.
6. The panel of Claim 1 substantially comprising a material having an inherent low reverberating quality such that upon forceful impact, the panel emits minimal vibration.
7. The soccer training device of Claim 1 wherein the support is made of rigid, durable weather resistant material or material composite that is rigid, durable and weather resistant in quality.
8. The soccer training device of Claim 1 wherein each support is detachably connected to one or more panels.
9. The soccer training device of Claim 1 wherein each panel is detachably connected to one or more fixturing means either by direct contact with said fixturing means or by indirect contact with said fixturing means by way of a support.
10. Fixturing means of Claim 9 selected from a group consisting of anchor, screw, stake, spike, section devices, frictional padding, and clamps.
11. A fixturing means comprising a rotating hinged stake

the hinged stake comprising a thin triangular wedge connected to a thin rod or axle such that an angle of the triangular wedge protrudes way from the axle and in which

the width or the widest portion of the triangular wedge freely rotates around the axis of said axle

the wedge inserts into or releases from a pliable ground surface while remaining attached to the axle

during rotation of the wedge around the axle, the flat surface of the triangular wedge buttresses an adjacent surface which prevents complete three hundred and sixty degree rotation around the axle

the buttress between the triangular wedge and said adjacent surface is rigid and inflexible against high forceful impact

12. The separate panel and support components of Claim 1, 8 and 9 are detachable for compact storage but may be transported or moved in its connected position for ease of portability.
13. The fitting between detachable components of the device of Claim 12 when connected having minimum to no loose spacing such that when erected and in use, the device is sturdy and will not rattle or create secondary noise upon forceful impact.
14. An individual repetitious soccer training system that is multi-dimensional and simulates real soccer game conditions wherein two or more substantially rigid vertical panels for the deflection of a soccer ball are oppositely or adjacently staged in predetermined pattern relative to each other in either a parallel, perpendicular or angled fashion forming a training module unit, multiple module units adjacently positioned to create a modular training system.
15. The training module unit of Claim 14 containing two or more deflection panels positioned or staged in a predetermined orientation relative to each other.
16. The training module unit of Claim 14 wherein additional deflection panels may be added to existing pre-established module units and oriented in either parallel, perpendicular or angled fashion relative to and between preexisting panels within the respective module unit to increase level of complexity within said unit.
17. Training module units of Claim 14 wherein the deflection panels are comprised of small device units, large device units or a combination of either types as described in Claim 2
18. Training module units of Claim 14 wherein

the maximum distance of separation between any two directly opposing small devices within a module unit is ten yards or less from the exposed main surface of one device to the exposed main surface of the opposing second device

19. The training module units of Claim 14 wherein the minimum separating distance between adjacent small device units positioned side by side within a module is at least two or more yards from the exposed side edge of one device to the exposed side edge of the neighboring or adjacent device
20. The modularized training system of Claim 14 wherein multiple module units of progressing levels of complexity are positioned adjacent to each other to form a progressive multi-level modularized soccer training system for individual repetitious skill development in a multi-dimensional environment simulating real conditions of professional level soccer playing.
21. A modularized training system according to Claims 20 wherein a complete progressive multi-level soccer training system for individual repetitious training simulating real game environment comprising multiple nine module units of varying levels of complexity as follows:

    the first six modular levels each containing two opposing small device units wherein the exposed main surface of the opposing small device units directly and oppositely faces each, the distances between the exposed main surfaces of each opposing small device unit of each two device modules ranging between three yards to ten yards in separation,

    the seventh and eighth modular units containing three small device units and one large device unit wherein the four device units are positioned in a rectangular pattern with two smaller device units positioned seven yards apart directly opposite each other, the remaining small device unit positioned adjacent to and at a perpendicular angle from one exposed side edge of either opposing small device units, the remaining larger device unit positioned adjacent to and at a perpendicular angle from a second exposed side edge of either opposing small device units, the remaining smaller and larger device units directly opposing each other by fourteen yard and one foot distance,

    the final level module unit comprising a simulated full soccer course with compressed dimensions containing two larger device units and six smaller device units, the eight device units of the ninth module oriented to create a rectangular silhouette, the larger device units positioned directly opposite each other separated by thirty two yard distance between their respective exposed main surfaces, the remaining six smaller device units positioned in two separate rows perpendicularly positioned by either sides of the larger

device units, each row containing three smaller device units adjacently positioned in a straight linear path, the three smaller device units of one row directly opposing the other three device units of the second row, the distance of separation between exposed main surfaces of the opposing small device units between opposing rows comprising eight yards, the distance of separation between exposed side edges of adjacent small device units within each row being a minimum of two yards.

22. A complete multi-level modular soccer training system of Claim 21 contained within forty square yards or less of substantially open space.
23. A method of using a modular soccer training unit and system of Claims 1 and 14 wherein multiple users may compete against each other according to their individual achievements progressing through each module unit and each sequential module level, individual achievements are scored according to algorithmic calculation of combined positive points for correct deflections and negative points for missed or incorrect deflections together with the length of time for completing the prescribed routines within each module unit and within the entire system in total.

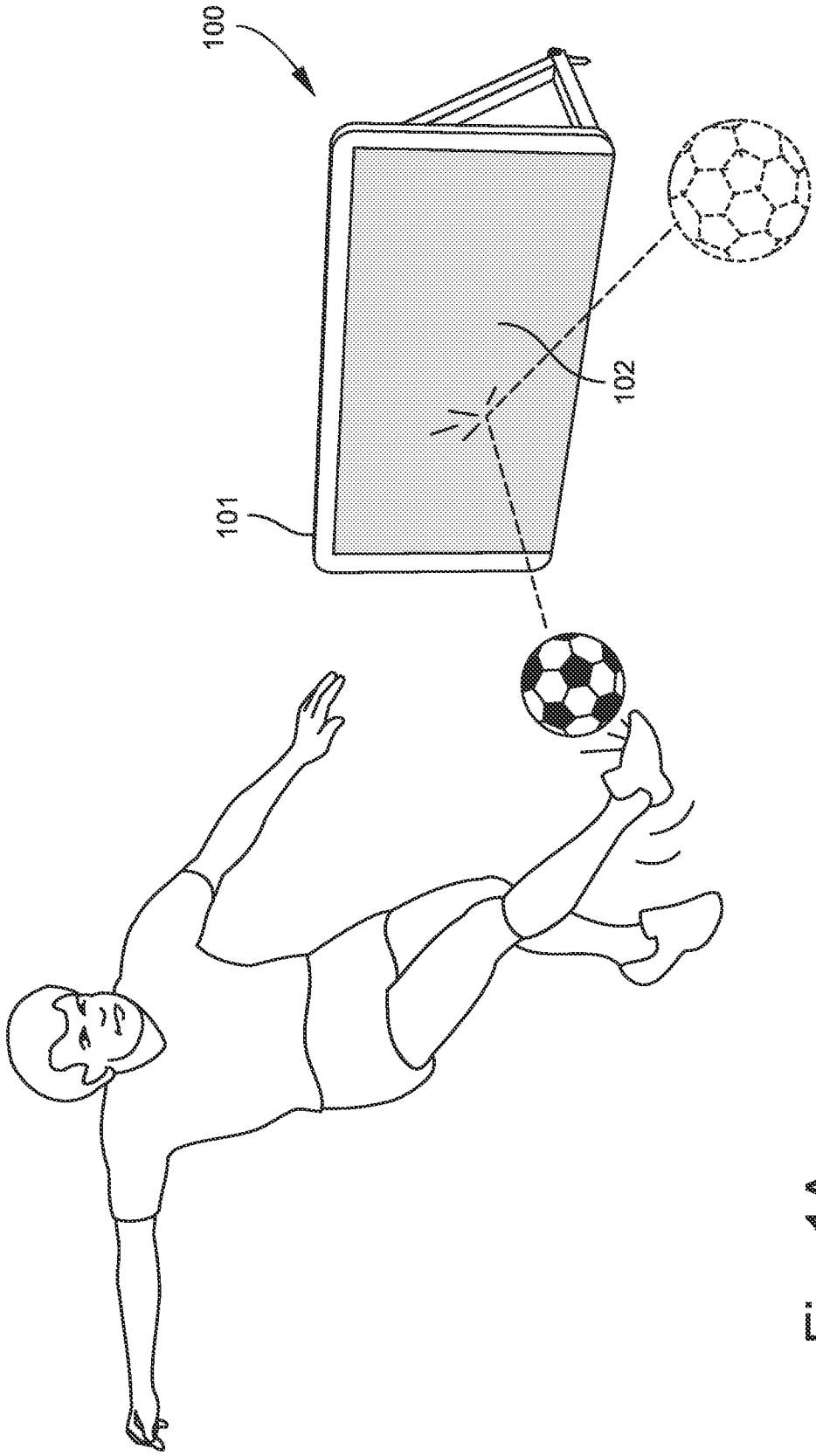

Fig. 1A

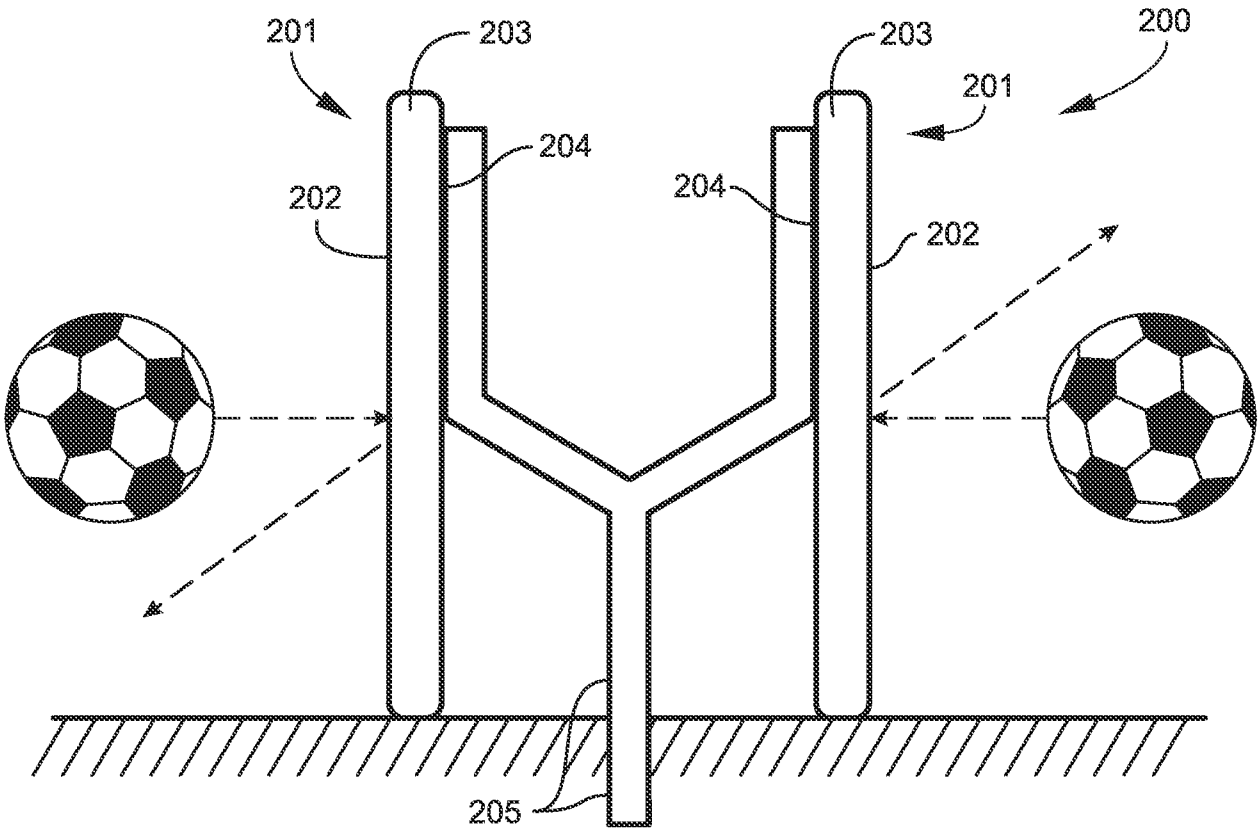

Fig.2

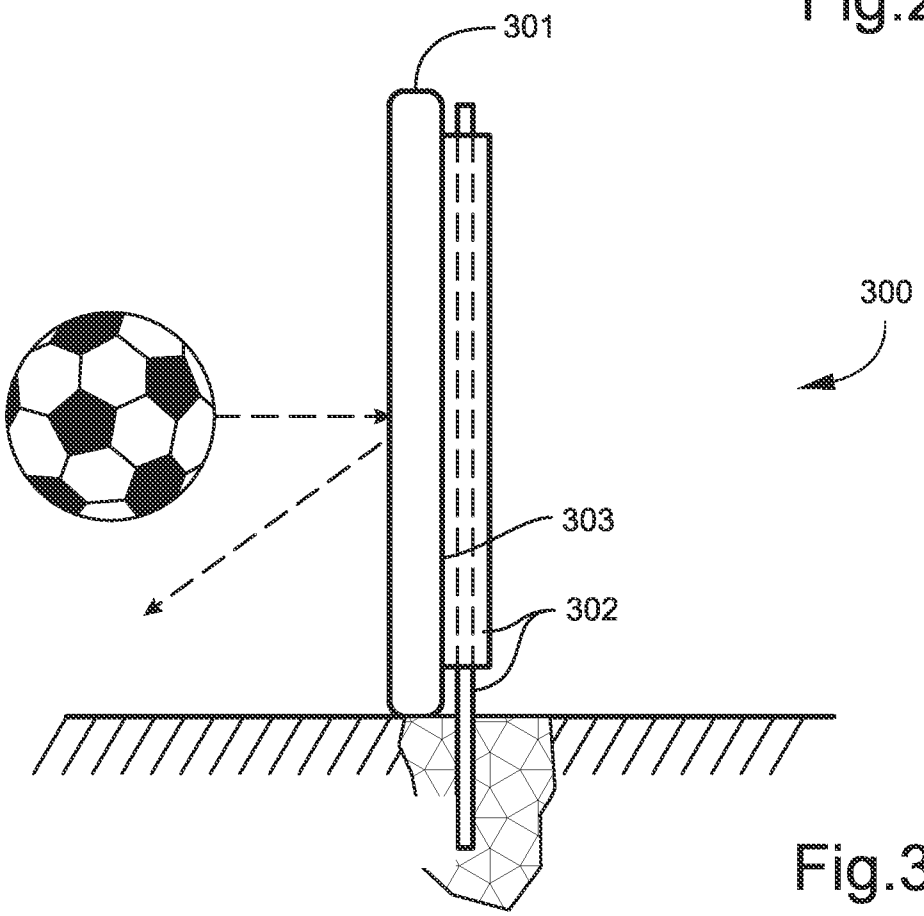

Fig.3

Fig. 4

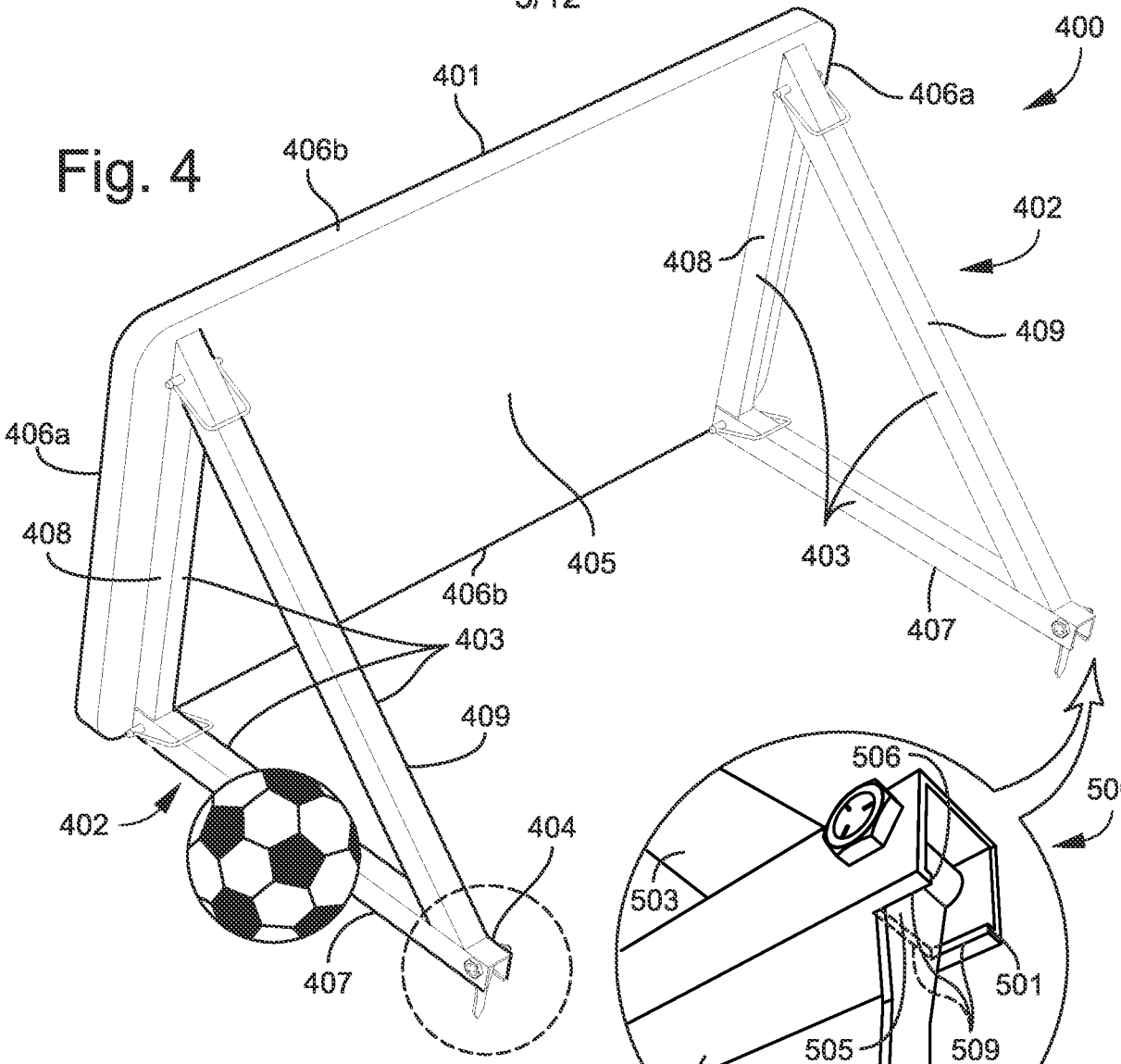

Fig. 5A

Fig. 5B

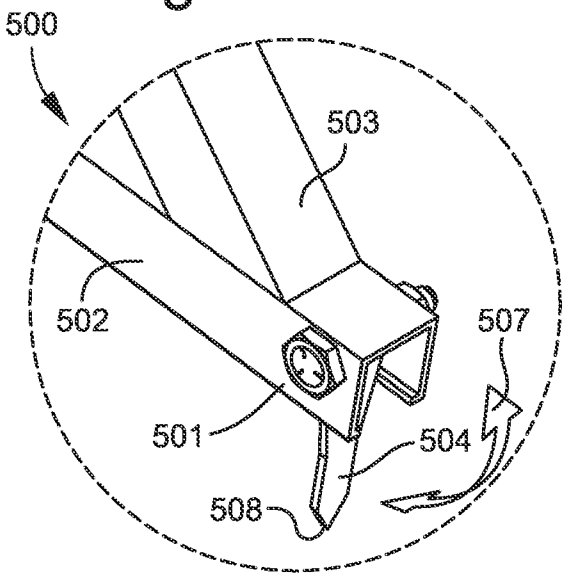

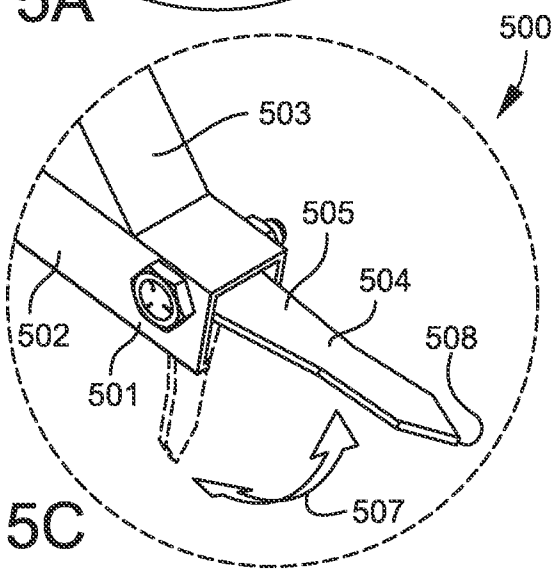

Fig. 5C

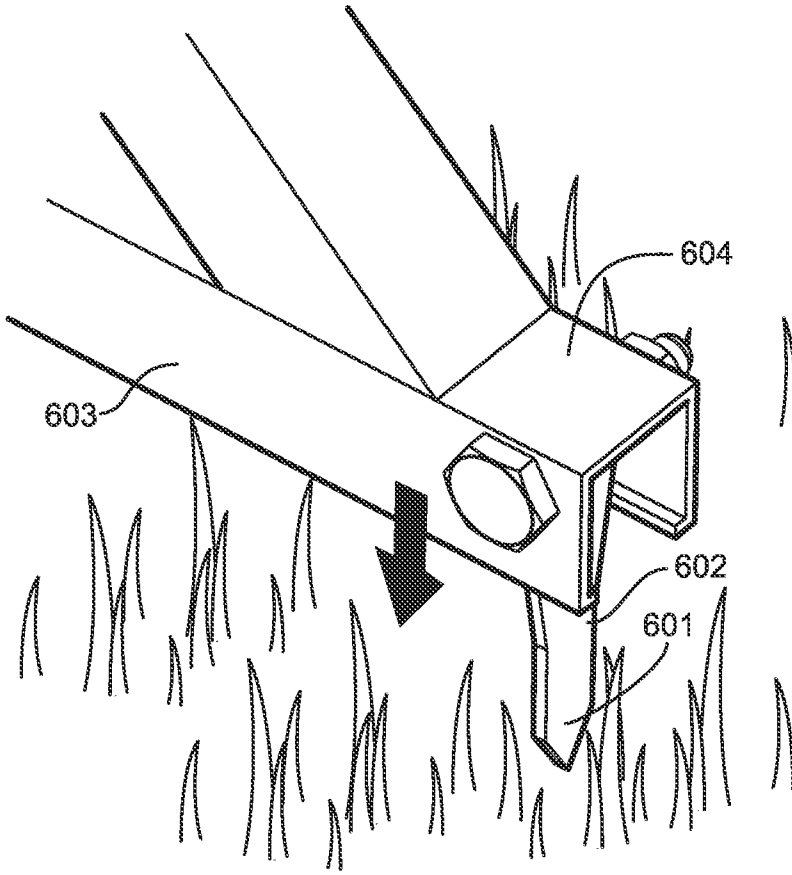

Fig. 6A

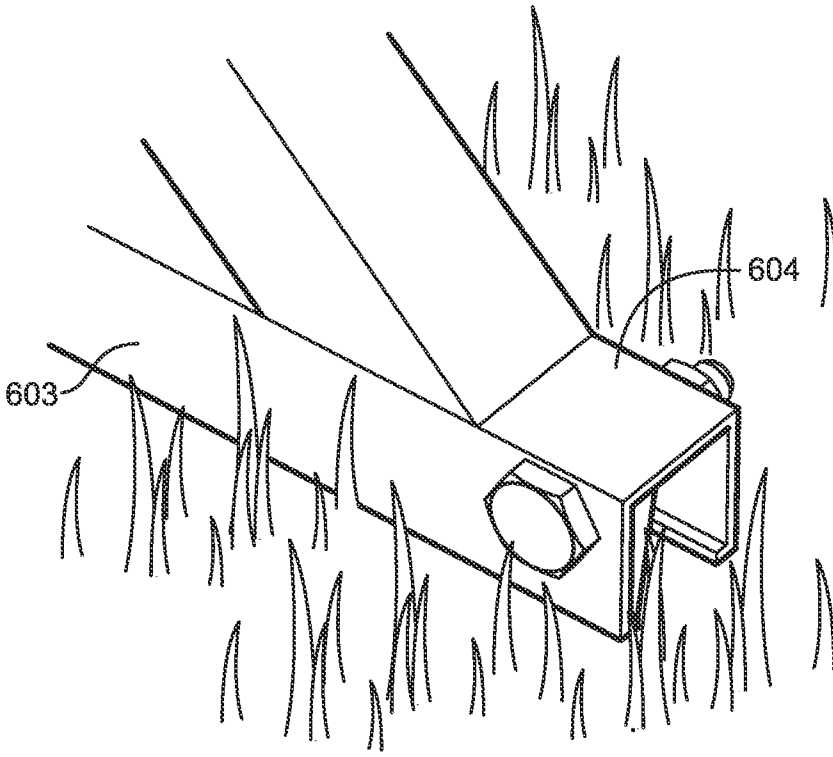

Fig. 6B

Fig. 6C

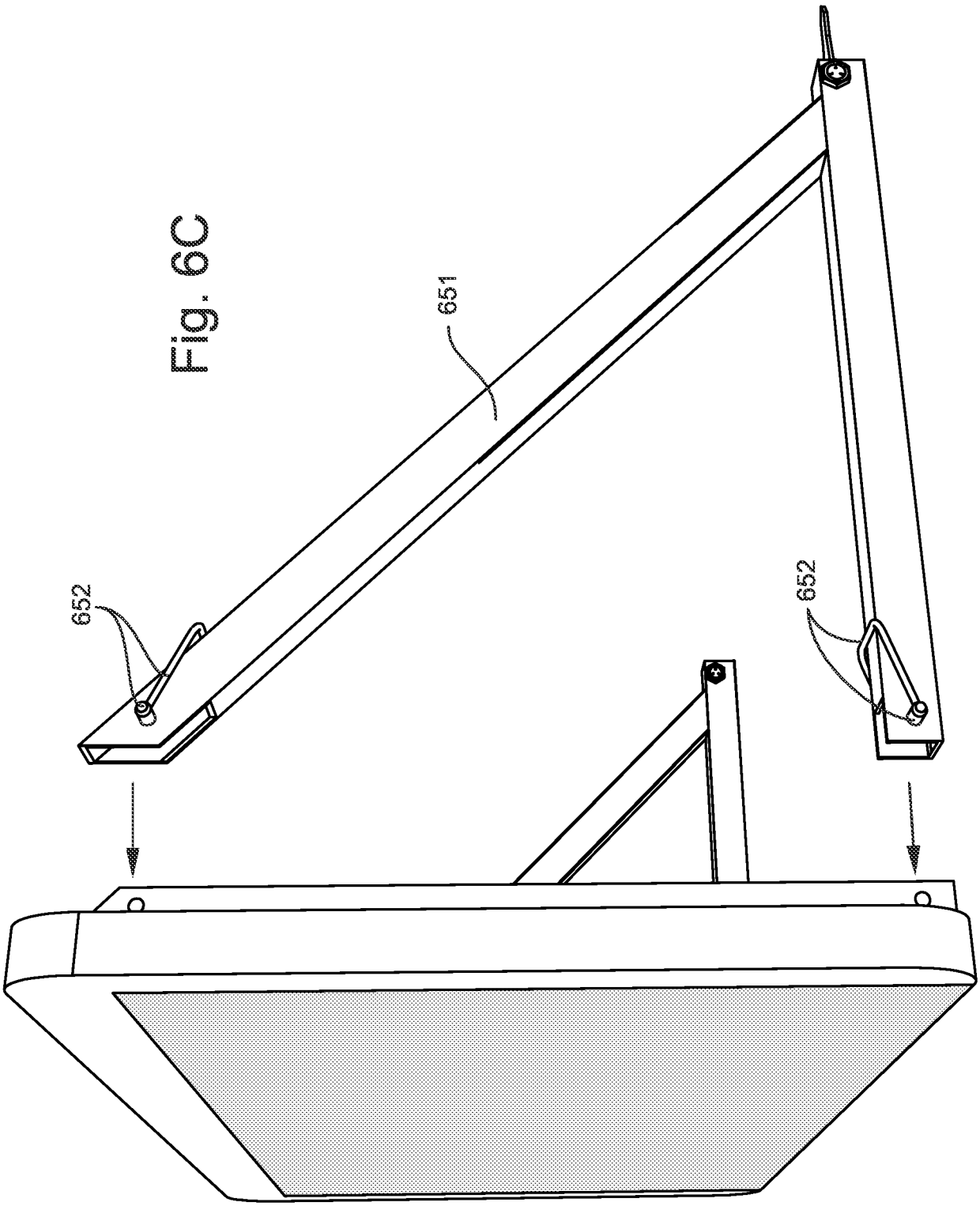

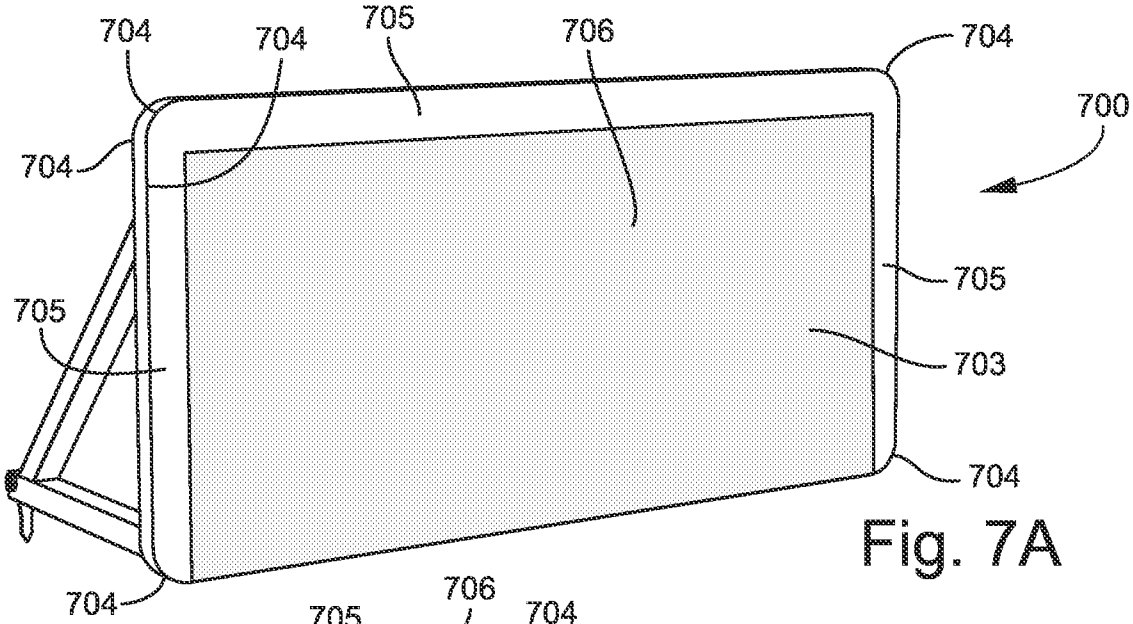

Fig. 7A

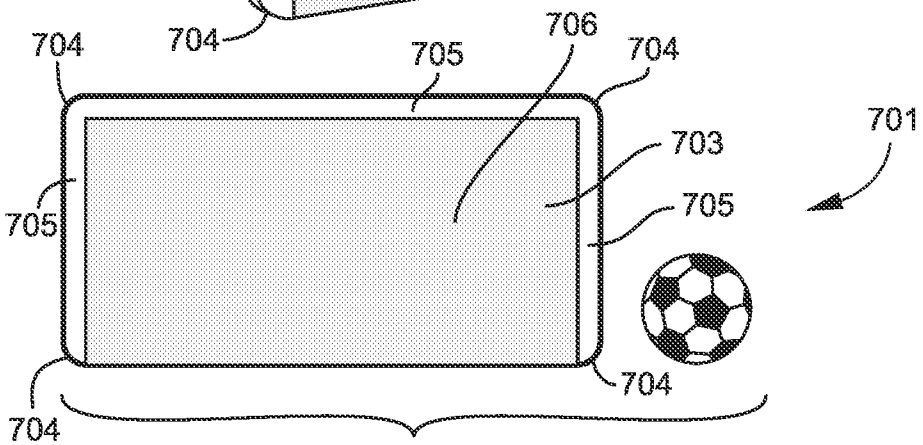

Fig. 7B

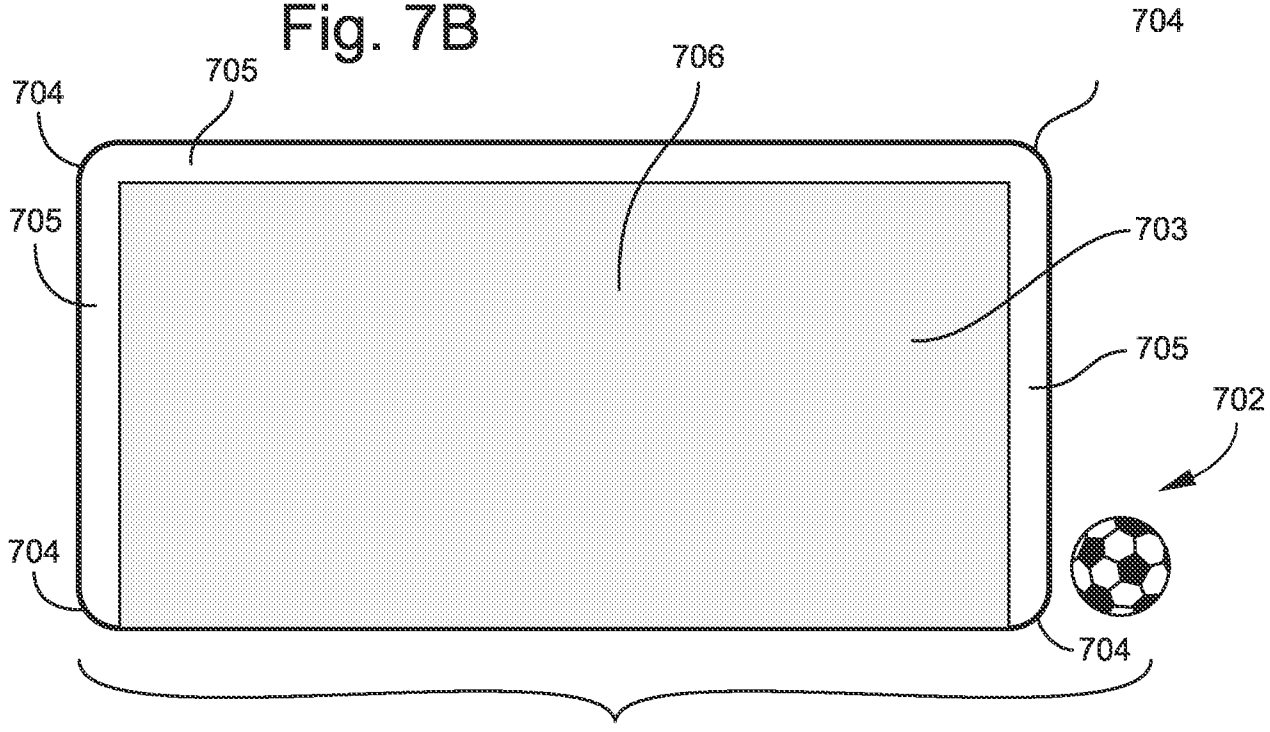

Fig. 7C

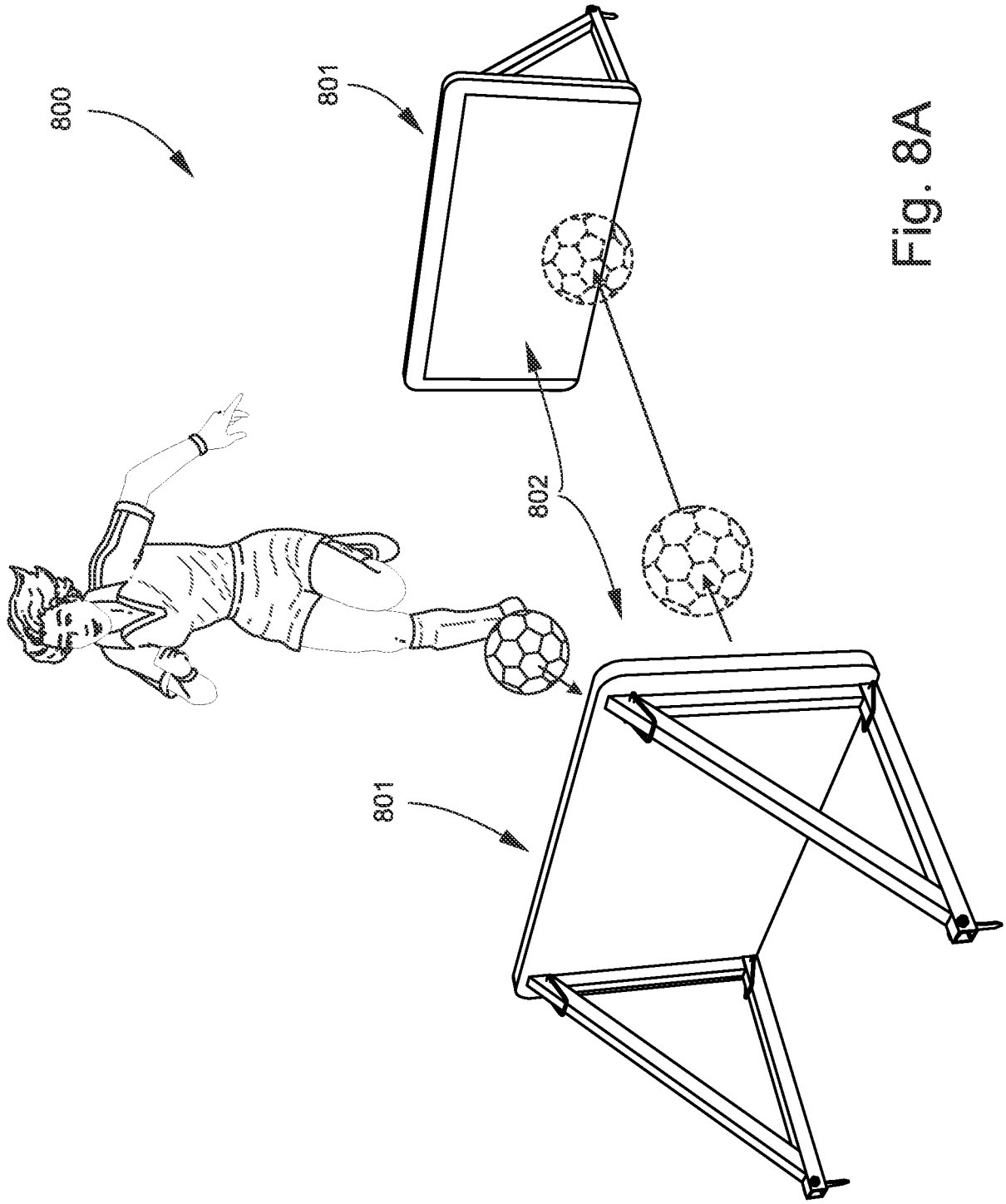

Fig. 8A

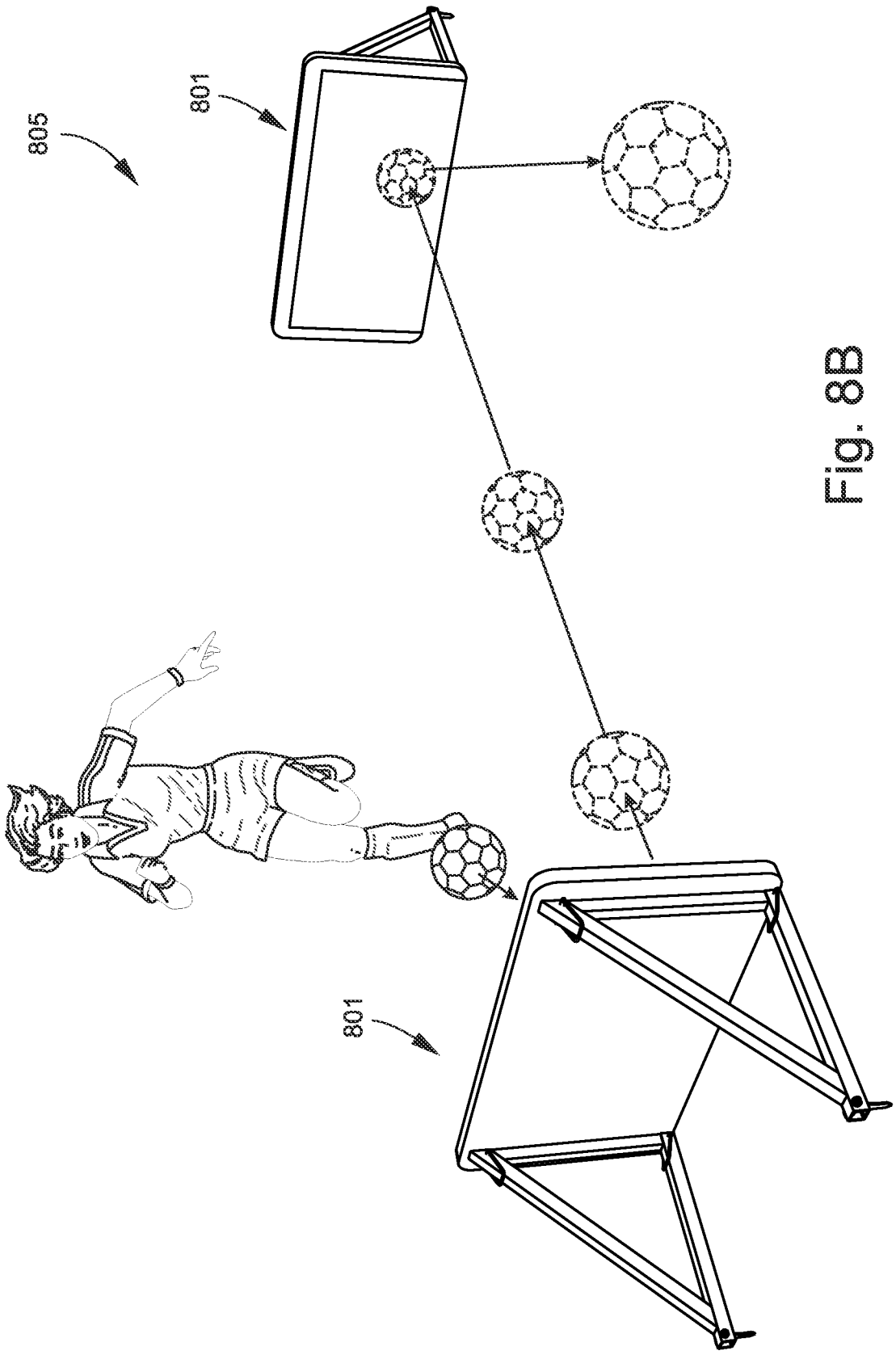

Fig. 8B

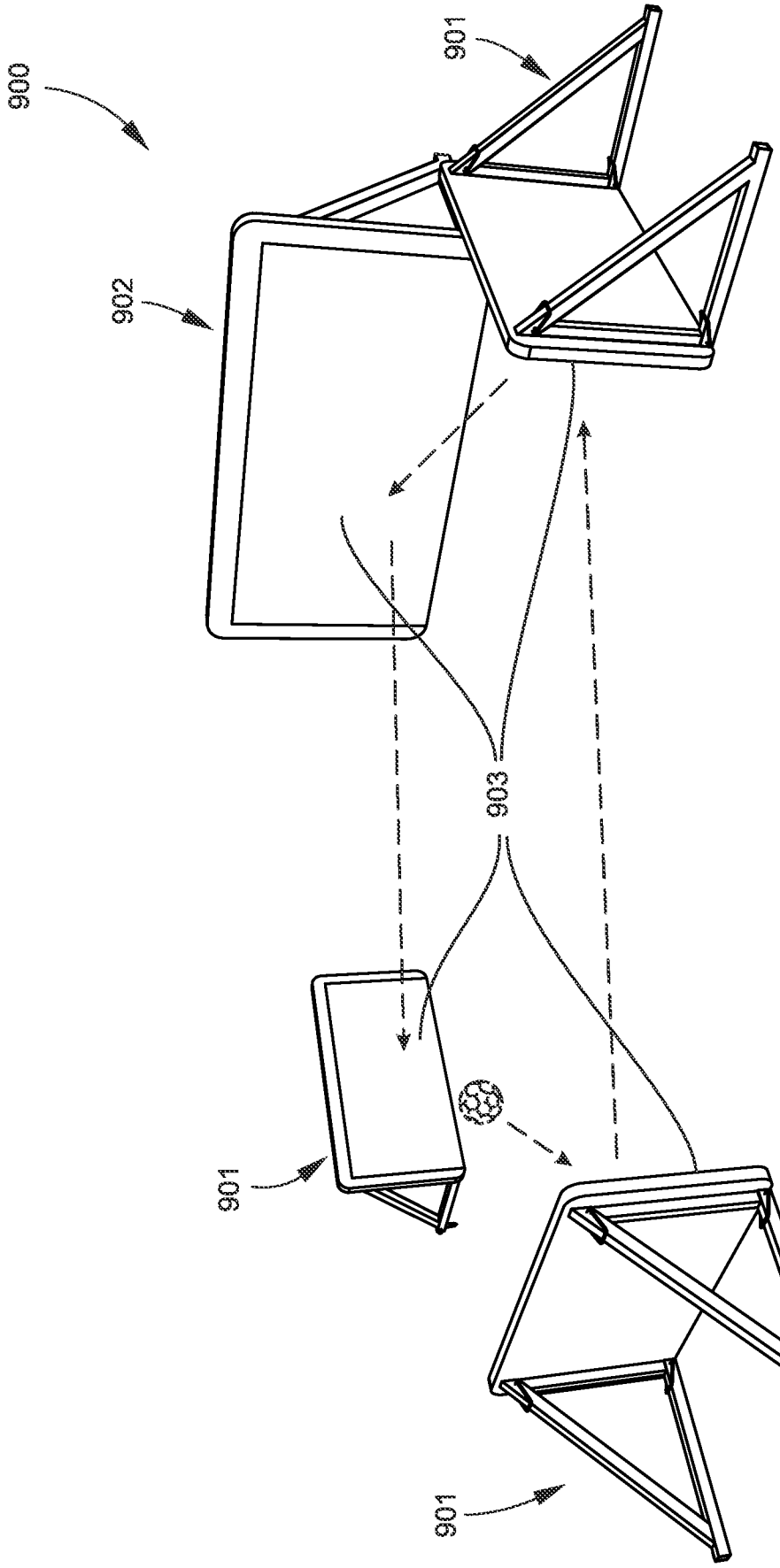

Fig. 9

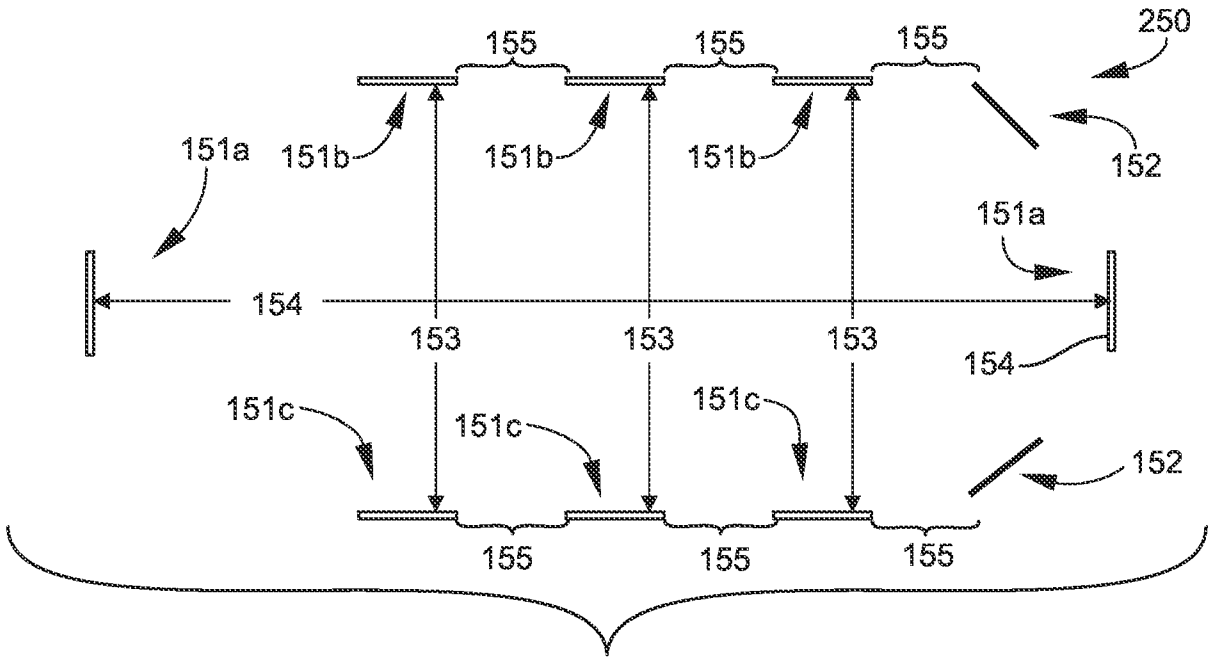
155
155
155
250
151a
151b
151b
151b
152
151a
154
153
153
153
154
151c
151c
151c
152
155
155
155

Fig. 10

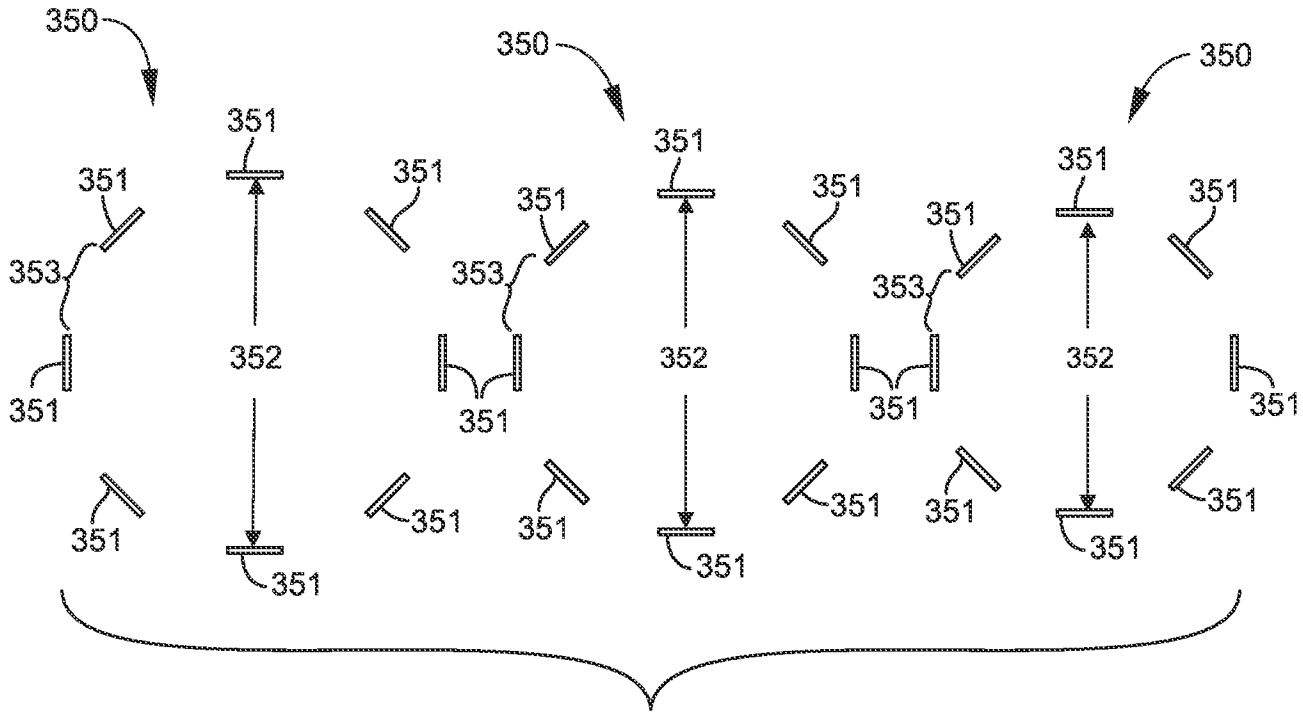
350
350
350
351
351
351
351
351
351
351
351
353
353
353
352
352
352
351
351
351
351
351
351
351
351
351
351
351
351
351

Fig. 12

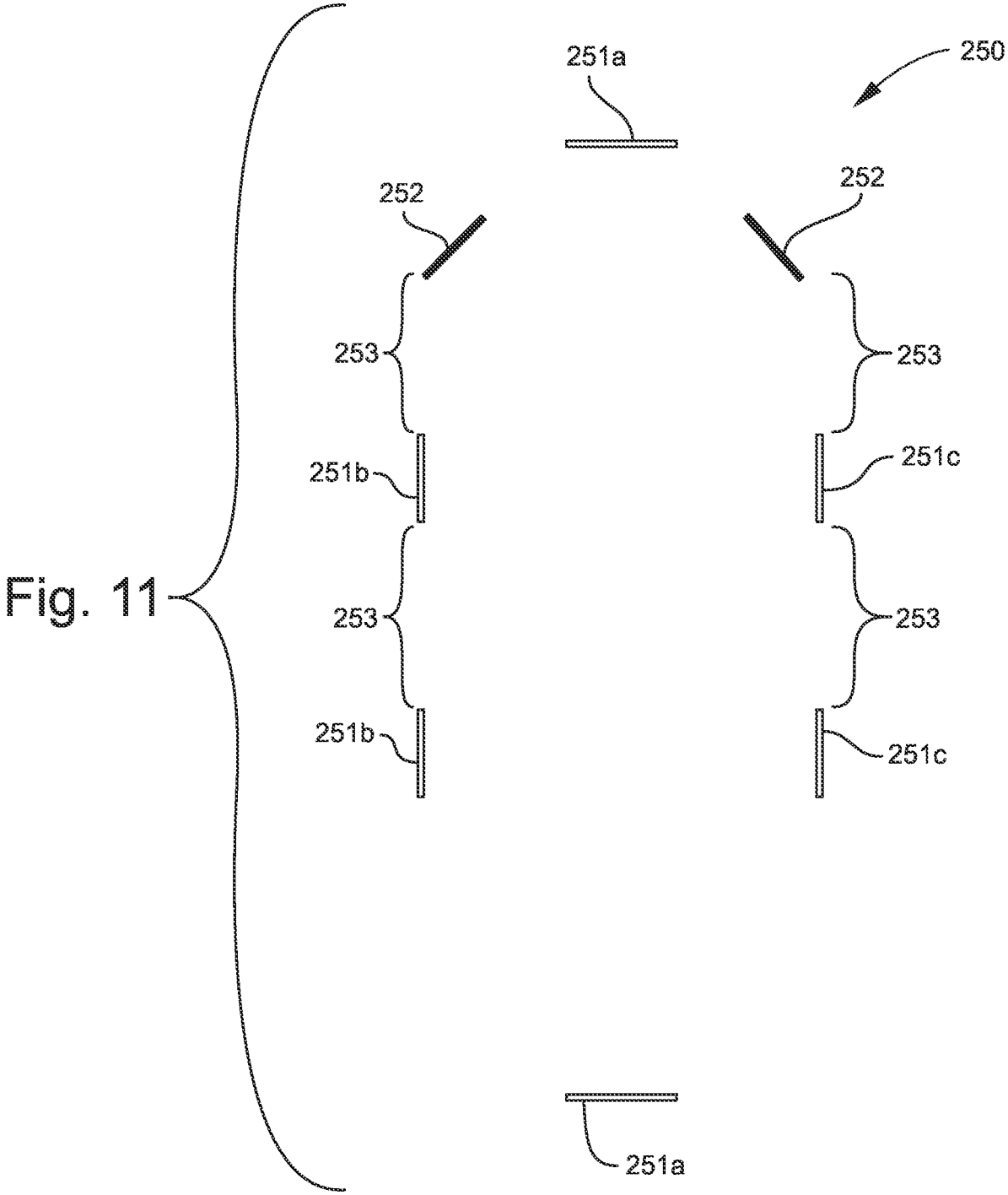

Fig. 11

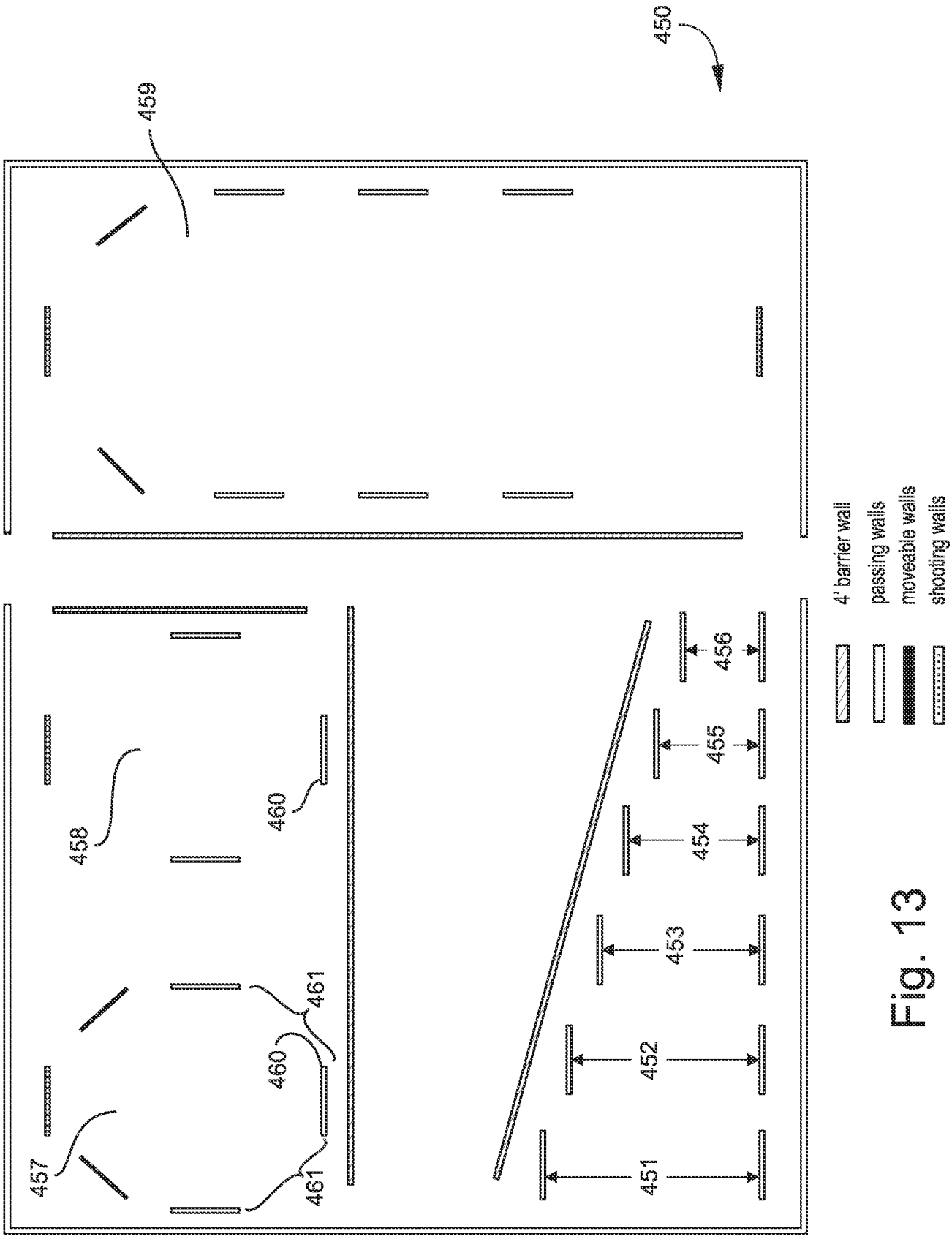
450
459
458
460
461
457
451
452
453
454
455
456
4' barrier wall
passing walls
moveable walls
shooting walls

Fig. 13

INTERNATIONAL SEARCH REPORT

International application No.
PCT/US2012/051642

A. CLASSIFICATION OF SUBJECT MATTER
IPC(8) - A63B 69/40 (2013.01)
USPC - 473/435
According to International Patent Classification (IPC) or to both national classification and IPC

B. FIELDS SEARCHED

Minimum documentation searched (classification system followed by classification symbols)
IPC(8) - A63B 63/00, 69/00, 69/40; A63F 7/06 (2013.01)
USPC - 273/108.1, 118R, 394, 396; 473/415, 422, 431, 434, 435, 446, 465, 470, 471

Documentation searched other than minimum documentation to the extent that such documents are included in the fields searched
CPC - A63B 63/00, 69/00, 69/40 (2013.01)

Electronic data base consulted during the international search (name of data base and, where practicable, search terms used)
PatBase, Google, ProQuest

C. DOCUMENTS CONSIDERED TO BE RELEVANT

Category*	Citation of document, with indication, where appropriate, of the relevant passages	Relevant to claim No.
Y	US 5,524,900 A (ALLEN) 11 June 1996 (11.06.1996) entire document	1-10
Y	US 2009/0139157 A1 (JONES) 04 June 2009 (04.06.2009) entire document	1-10
Y	US 5,556,104 A (GUILLEN, JR.) 17 September 1996 (17.09.1996) entire document	3-5
Y	US 5,857,928 A (STEWART) 12 January 1999 (12.01.1999) entire document	3-5

☐ Further documents are listed in the continuation of Box C. ☐

* Special categories of cited documents:
"A" document defining the general state of the art which is not considered to be of particular relevance
"E" earlier application or patent but published on or after the international filing date
"L" document which may throw doubts on priority claim(s) or which is cited to establish the publication date of another citation or other special reason (as specified)
"O" document referring to an oral disclosure, use, exhibition or other means
"P" document published prior to the international filing date but later than the priority date claimed
"T" later document published after the international filing date or priority date and not in conflict with the application but cited to understand the principle or theory underlying the invention
"X" document of particular relevance; the claimed invention cannot be considered novel or cannot be considered to involve an inventive step when the document is taken alone
"Y" document of particular relevance; the claimed invention cannot be considered to involve an inventive step when the document is combined with one or more other such documents, such combination being obvious to a person skilled in the art
"&" document member of the same patent family

Date of the actual completion of the international search	Date of mailing of the international search report
15 January 2013	07 FEB 2013
Name and mailing address of the ISA/US Mail Stop PCT, Attn: ISA/US, Commissioner for Patents P.O. Box 1450, Alexandria, Virginia 22313-1450 Facsimile No. 571-273-3201	Authorized officer: Blaine R. Copenheaver PCT Helpdesk: 571-272-4300 PCT OSP: 571-272-7774

INTERNATIONAL SEARCH REPORT

International application No.
PCT/US2012/051642

Box No. II Observations where certain claims were found unsearchable (Continuation of item 2 of first sheet)

This international search report has not been established in respect of certain claims under Article 17(2)(a) for the following reasons:

1. ☐ Claims Nos.:
because they relate to subject matter not required to be searched by this Authority, namely:

2. ☐ Claims Nos.:
because they relate to parts of the international application that do not comply with the prescribed requirements to such an extent that no meaningful international search can be carried out, specifically:

3. ☐ Claims Nos.:
because they are dependent claims and are not drafted in accordance with the second and third sentences of Rule 6.4(a).

Box No. III Observations where unity of invention is lacking (Continuation of item 3 of first sheet)

This International Searching Authority found multiple inventions in this international application, as follows:

See extra sheet.

1. ☐ As all required additional search fees were timely paid by the applicant, this international search report covers all searchable claims.

2. ☐ As all searchable claims could be searched without effort justifying additional fees, this Authority did not invite payment of additional fees.

3. ☐ As only some of the required additional search fees were timely paid by the applicant, this international search report covers only those claims for which fees were paid, specifically claims Nos.:

4. ☒ No required additional search fees were timely paid by the applicant. Consequently, this international search report is restricted to the invention first mentioned in the claims; it is covered by claims Nos.:
1-10

Remark on Protest

☐ The additional search fees were accompanied by the applicant's protest and, where applicable, the payment of a protest fee.

☐ The additional search fees were accompanied by the applicant's protest but the applicable protest fee was not paid within the time limit specified in the invitation.

☐ No protest accompanied the payment of additional search fees.

INTERNATIONAL SEARCH REPORT
Information on patent family members

International application No.
PCT/US2012/051642

CONTINUATION OF BOX III

This application contains the following inventions or groups of inventions which are not so linked as to form a single general inventive concept under PCT Rule 13.1. In order for all inventions to be examined, the appropriate additional examination fees must be paid.

Group I, claims 1-10, are drawn to a deflection wall unit.

Group II, claim 11 is drawn to a fixturing means.

Group III, clams 14-16, 18-22, are drawn to a soccer training system.

The inventions listed as Groups I, II, and III do not relate to a single general inventive concept under PCT Rule 13.1 because, under PCT Rule 13.2, they lack the same or corresponding special technical features for the following reasons:

The special technical features of Group I, a wall unit comprising one or more rigid panel structures, each panel having a width, a height and a thickness, each panel having external surfaces that are exposed such that the external surface is substantially open and unobstructed from the trajectory and deflection of a ball, each panel having exposed side edges, each panel having curved, rounded or soft exposed corners, each panel piece having a larger exposed main surface that is substantially flat and smooth, all exposed surfaces of each panel being smooth and having no protrusions or recesses, the external surface of each panel having a viscous texture with some elasticity or flexibility similar to rubber or latex, the panel is substantially rigid, hard, durable and weather resistant, the perimeter around the exposed main surface of each panel having a color similar to the frame of a goal post such as white or metallic silver, said white perimeter or border comprising less than fifty percent of the total surface area of the main surface, the remaining area within the white border of the main surface comprising a substantially green or substantially beige color scheme similar to the typical color of a standard outdoor grassy field or an indoor wood surface arena, the panel comprising a larger and a smaller size, one or more panels detachably connected to a support such that when in erect position, and the exposed main surface of the panel is held upright in a substantially vertical position over the ground surface and the lineal vector direction of the panel's height bisecting the horizontal plane of the ground surface, are not present in Groups II-III; the special technical features of Group II, fixturing means comprising a rotating hinged stake, the hinged stake comprising a thin triangular wedge connected to a thin rod or axle such that an angle of the triangular wedge protrudes way from the axle and in which the width or the widest portion of the triangular wedge freely rotates around the axis of said axle the wedge inserts into or releases from a pliable ground surface while remaining attached to the axle during rotation of the wedge around the axle, the flat surface of the triangular wedge buttresses an adjacent surface which prevents complete three hundred and sixty degree rotation around the axle, and the buttress between the triangular wedge and said adjacent surface is rigid and inflexible against high forceful impact, are not present in Groups I, III; and the special technical features of Group III, an individual repetitious soccer training system that is multi-dimensional and simulates real soccer game conditions wherein the deflection of a soccer ball are oppositely or adjacently staged in predetermined pattern forming a training module unit, and multiple module units adjacently positioned to create a modular training system, are not present in Groups I-II.

Since none of the special technical features of the Group I, II, or III inventions is found in more than one of the inventions, unity is lacking.