United States Patent [19]

Hershberger

[11] **3,927,791**

[45] **Dec. 23, 1975**

[54] **FUSIBLE PLUG**

[76] Inventor: **Welcome D. Hershberger,** 16135 Petro Drivel, Miswaka, Ind. 46544

[22] Filed: **Aug. 5, 1974**

[21] Appl. No.: **494,482**

[52] **U.S. Cl.** ..... **220/89 B;** 122/504.1; 138/89; 220/288

[51] **Int. Cl.**[2] **B65D 25/00;** F22B 37/46

[58] **Field of Search** ..... 220/89 B, 288, 89, 303; 138/89; 137/72; 89/30, 31; 116/106, 114.5; 122/504.1, 504.3

[56] **References Cited**

UNITED STATES PATENTS

195,367	9/1877	Hiller	220/89 B
1,557,250	10/1925	Grandfield	137/72
1,590,761	6/1926	Kennell	137/77
1,595,676	8/1926	Merkert	220/288
1,961,298	6/1934	Lundy	220/288
1,973,182	9/1934	Shaw	220/89 B
2,035,497	3/1936	Morse	220/89 B
2,461,940	2/1949	Sundstrom	220/89 B

Primary Examiner—William Price
Assistant Examiner—Allen N. Shoap
Attorney, Agent, or Firm—Olsen and Stephenson

[57] **ABSTRACT**

A fusible plug assembly adapted for use with projectiles, boilers and other apparatus which for safety purposes requires thermally responsive means for pressure release or to prevent undesired pressure buildup. The disclosed embodiment is a fusible lifting plug assembly for use in transportation and storage of ordnance projectiles and includes a fusible plug of a bismuth alloy and an insert molded in said plug to conserve the amount of the bismuth alloy that is required without altering the normal functioning of the fusible plug.

4 Claims, 6 Drawing Figures

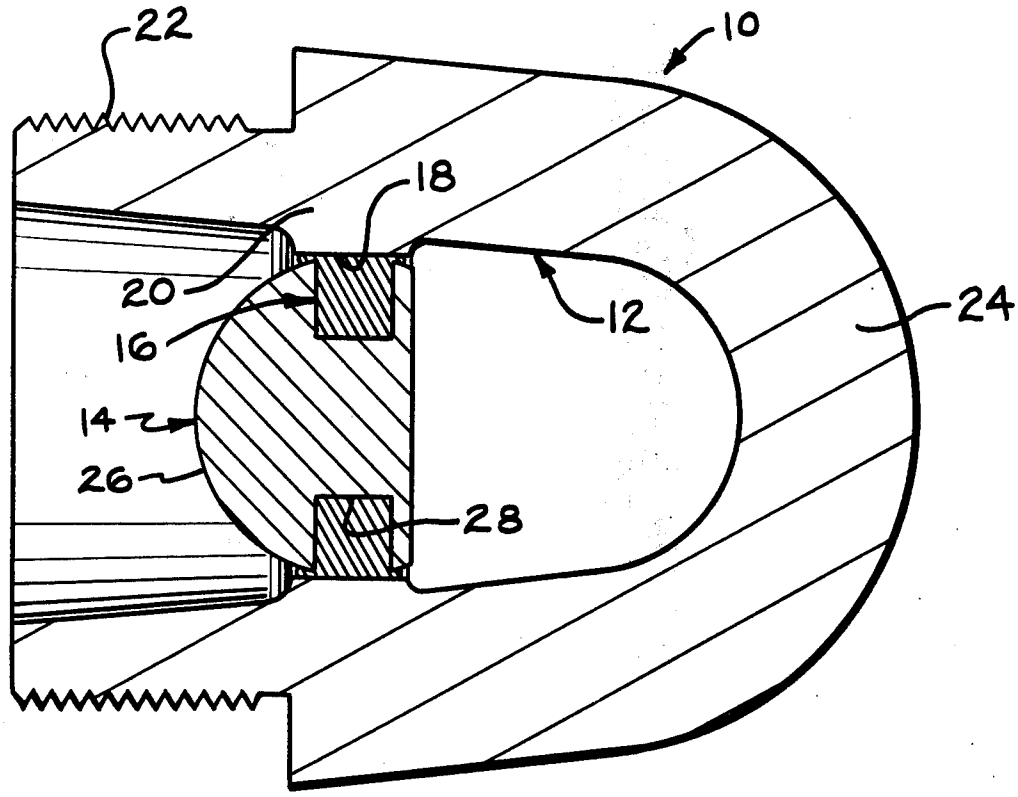

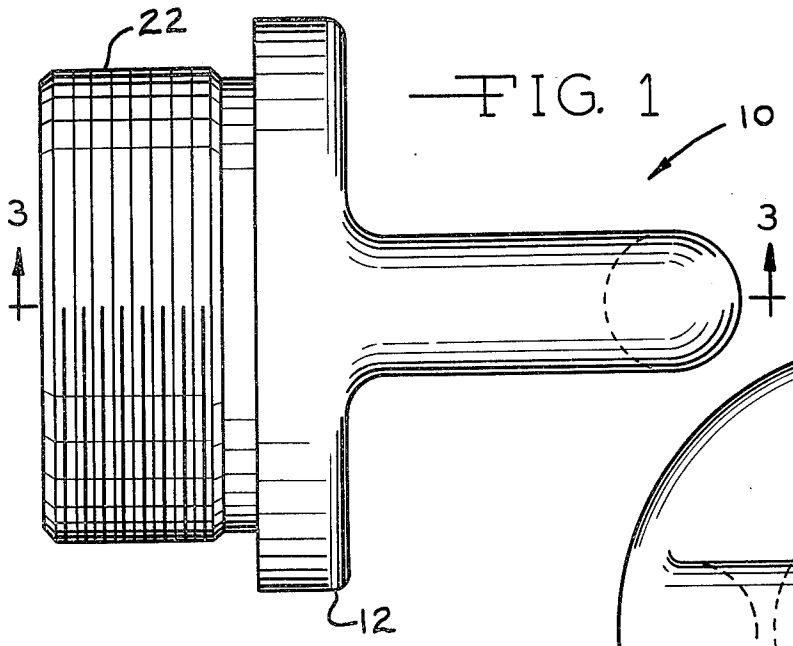

FIG. 1

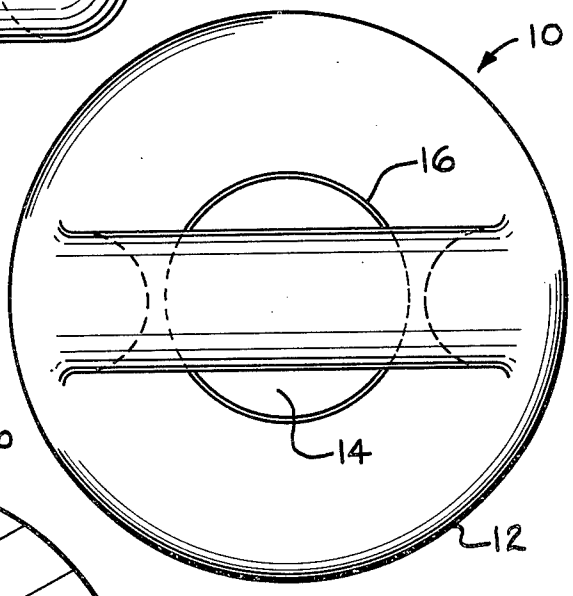

FIG. 2

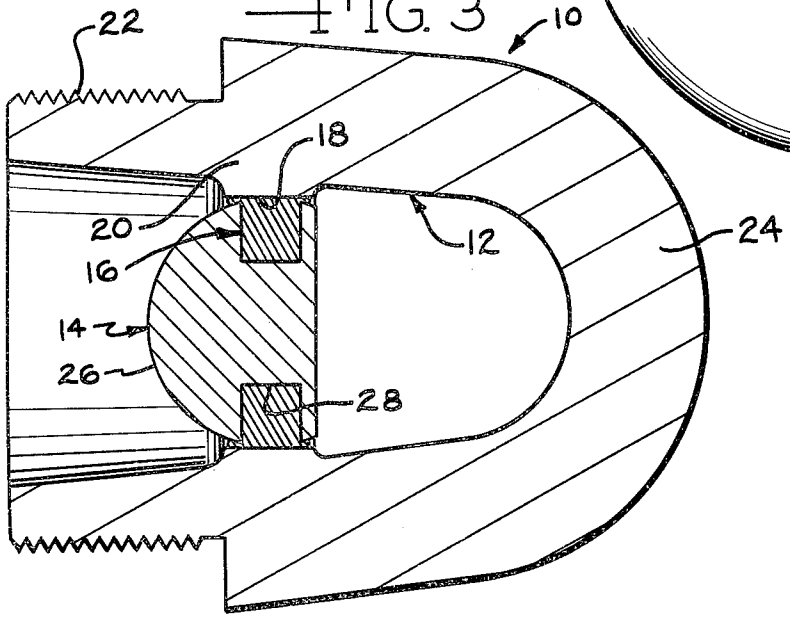

FIG. 3

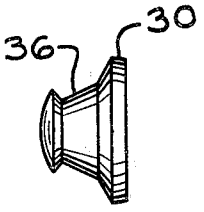

FIG. 4

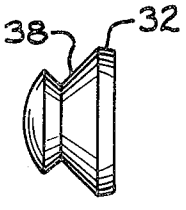

FIG. 5

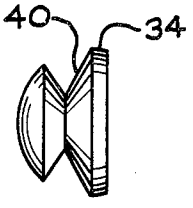

FIG. 6

FUSIBLE PLUG

BACKGROUND OF THE INVENTION

The present invention relates to a fusible plug assembly that is thermally responsive to ambient temperature to provide a vent opening to a chamber or other device if the ambient temperature becomes excessive.

It is conventional practice to provide fusible plug assemblies for safety purposes in which the plug has a fusible core of a bismuth alloy. The main component of these alloys normally is bismuth, and the alloys are known to have very low melting temperatures and low physical strength. As such they have been used in safety devices associated with sprinkler systems, compressed gas tanks, fire alarm devices, disarmed ordnance projectiles, and the like.

As a general rule, bismuth alloys of approximately **50** percent bismuth exhibit little change of volume during solidification, and alloys containing more than this amount expand while those containing less tend to shrink during solidification. Thus when used as the fusible material in a lifting plug for a disarmed ordnance projectile an alloy having bismuth in excess of 50 percent is desired, and a very suitable alloy is one which contains approximately 52.5 percent bismuth, **32** percent lead and **15.5** percent tin. Lifting plugs of this character are formed by pouring molten alloy into a bore extending axially through the body of the plug and when the alloy solidifies it expands to provide a rigid seal in the bore. The alloy will melt at a temperature near 210° F to provide a vent opening for a projectile in which the lifting plug is secured if the projectile is subjected to undesired heating.

In conventional lifting plugs of the type described, approximately one-tenth of a pound of the alloy is required for each fusible lifting plug. This may appear to be a relatively small amount, but it represents a significant amount of bismuth when the aggregate numbers of projectiles that are produced are considered. Bismuth is in limited supply and its cost per pound is relatively high. Thus, there is a need for an improved fusible plug which will perform to the same standards as conventional units produced heretofore, but which will utilize substantially less bismuth.

SUMMARY OF THE INVENTION

The present invention has overcome inadequacies of fusible plugs as heretofore known and provides an improved construction whereby the quantity of bismuth required can be reduced materially without reducing the effectiveness of the plug. This has been accomplished by including an insert within the bore of the plug which is operable to displace approximately one-half of the bismuth required in each plug, and which has a configuration so that it will not become an obstruction in the bore if the bismuth alloy melts.

According to one form of the present invention, a fusible plug assembly is provided that is thermally responsive to ambient temperature so that a portion thereof will melt to provide a vent opening when a preselected temperature is reached. The assembly comprises the plug having a cylinderical bore defining a through passageway, an insert position in the bore and having around its periphery a radiallly outwardly directed groove facing the inner wall of the bore, and fusible material in the bore and said groove sealing closed the bore and adapted to fuse at the preselected

temperature to permit the material to flow from the bore and to allow the insert to pass freely through the bore. The insert has an external configuration so that its outermost surfaces conform to the shape of a sphere that has a radius smaller than the radius of the bore. By virture of this construction and arrangement, the insert cannot become caught or otherwise block the passageway after the fusible material has been melted.

To assure that a proper seal is provided during the molding of the fusible material in the plug, it is found desirable to use a bismuth alloy containing 52.5 percent bismuth, 32 percent lead and 15.5 percent tin. This alloy has the properties of expanding when it solidifies, and it has a melting point in the range of 210° F which is sufficiently low to function as a fusible material for safety devices. The insert that is molded within the fusible material is capable of displacing at least half of the bismuth alloy that normally would be used in the prior art devices, and, therefore, it serves to reduce by approximately one-half the quantity of bismuth that is required.

Thus, it is an object of the present invention to provide an improved fusible plug assembly that will meet all the standards of performance required by prior art devices, but which will reduce substantially the quantity and cost of the fusible material that is required in the plug.

Other objects of this invention will appear in the following description and appended claims, reference being had to the accompanying drawings forming a part of this specification wherein like reference characters designate corresponding parts in the several views.

BRIEF DESCRIPTION OF THE DRAWING

FIG. **1** is a side elevational view of a fusible plug assembly embodying one form of the present invention;

FIG. **2** is a top plan view of the fusible plug assembly;

FIG. **3** is a longitudinal section taken on the lines **3—3** of FIG. **1**;

FIGS. **4, 5,** and **6** illustrate modified forms of the insert that can be used in the fusible plug assembly.

DESCRIPTION OF THE PREFERRED EMBODIMENTS

Before explaining the present invention in detail, it is to be understood that the invention is not limited in its application to the details of construction and arrangement of parts illustrated in the accompanying drawings, since the invention is capable of other embodiments and of being practiced or carried out in various ways. Also, it is to be understood that the phraseology or terminology employed herein is for the purpose of description and not of limitation.

Referring not to the drawing, the invention will be described in greater detail. The fusible plug assembly **10** includes the plug **12,** the insert **14,** and the fusible material **16.**

The plug **12** in the illustrated embodiment is a metal casting, preferably of malleable iron or steel, which has a cylindrical bore **18** that extends axially through the body portion **20** to define a through passageway. The body portion is also externally threaded, as at **22,** so that it can be secured in the end of a disarmed ordnance projectile. The plug **12** also includes the eyelet which is intergrally formed with the cylinderical body portion **20** for lifting the ordnance projectile.

The insert **14** has an exterior surface **26** which conforms to the shape of a sphere which has a radius

smaller than the radius of the bore. The insert **14** also has an annular groove **28** that is radially outwardly directed so that it faces the inner wall of the bore **18.**

The fusible material fills the groove **28** and is firmly in engagement with the inner wall of the bore **18** so that it provides a rigid seal within the bore **18.** In the illustrated embodiment of the invention the fusible material **16** is a bismuth alloy having more than 50 percent bismuth so that when the molten material solidifies during formation of the fusible plug assembly, it will expand to assure that a rigid seal is provided in the bore **18.** A preferred bismuth alloy which provides a desired melting point temperature and which utilizes a minimum amount of bismuth while still providing the desired expansion during solidification is one which contains 52.5 percent bismuth, 32 percent lead, and 15.5 percent tin. The fusible plug assembly can readily be formed by placing the plug **12** in a mold, positioning the insert **14** in an appropriate position within the mold and then pouring the molten fusible material **16** into the cavity defined by the mold apparatus, the insert **14,** and the bore of the plug **12.** This fusible material has a melting point of approximately 210° F so that in the event overheating of the disarmed ordance projectile should occur, the fusible material **16** will melt at that temperature, and melted material and the insert **14** will then freely flow or fall from the bore **18** to permit venting of the disarmed ordnance projectile so that it will not be detonated.

FIGS. **4, 5,** and **6** show other forms of inserts **30, 32,** and **34** which may be used in place of the insert **14** illustrated in FIG. **3.** It will be observed that each of these modified forms of inserts have exterior surfaces which conform to the shape of a sphere so that they will pass freely through the bore **18** should the fusible material melt. These inserts also have grooves **36, 38,** and **40** in which the fusible material can flow into during the molding operation and from which they can radially expand during solidification to seal rigidly the bore **18.**

It is claimed:

1. A fusible plug assembly that is thermally responsive to ambient temperature so that a portion thereof will melt to provide a vent opening when a preselected temperature is reached, said assembly comprising a plug including a portion having a cylindrical bore defining a through passageway of uniform diameter throughout its length, an insert positioned in said bore and having around its periphery a radially outwardly directed groove facing the inner wall of said bore, and fusible material in said groove and extending into said bore in sealing relationship therewith, said material adapted to fuse at said preselected temperature to permit said insert to pass through said bore, said insert being contoured so that its outermost surfaces conform to the shape of a sphere that has a radius smaller than the radius of said bore so that when said material fuses the insert can pass freely out of either end of said passageway.

2. The fusible plug assembly that is defined in claim **1,** wherein said fusible material is a bismuth alloy containing more than 50 percent bismuth.

3. The fusible plug assembly that is defined in claim **2,** wherein said alloy contains approximately 52.5 percent bismuth, 32 percent lead and 15.5 percent tin.

4. The fusible plug assembly that is defined in claim **1** which includes a cylindrical body portion that is externally threaded at one end and through which said bore extends, and an eyelet integrally connected to the other end of the body portion.

* * * * *