(19) Europäisches Patentamt
European Patent Office
Office européen des brevets

(11) **EP 3 775 443 B1**

(12) **EUROPEAN PATENT SPECIFICATION**

(45) Date of publication and mention of the grant of the patent:
01.01.2025 Bulletin 2025/01

(21) Application number: **19716895.8**

(22) Date of filing: **11.04.2019**

(51) International Patent Classification (IPC):
E05B 3/06 *(2006.01)*

(52) Cooperative Patent Classification (CPC):
E05B 3/06; E05B 2003/006

(86) International application number:
PCT/EP2019/059227

(87) International publication number:
WO 2019/197523 (17.10.2019 Gazette 2019/42)

(54) MANUAL CONTROL DEVICE FOR A LOCK OF A DOOR OR WINDOW

HANDSTEUERUNGSVORRICHTUNG FÜR EIN SCHLOSS EINER TÜR ODER EINES FENSTERS

DISPOSITIF DE COMMANDE MANUELLE D'UN VERROU DE PORTE OU DE FENÊTRE

(84) Designated Contracting States:
AL AT BE BG CH CY CZ DE DK EE ES FI FR GB GR HR HU IE IS IT LI LT LU LV MC MK MT NL NO PL PT RO RS SE SI SK SM TR

(30) Priority: **13.04.2018 IT 201800004467**

(43) Date of publication of application:
17.02.2021 Bulletin 2021/07

(73) Proprietors:
- **Opentech S.r.l. a Socio Unico**
  25078 Nozza di Vestone (Brescia) (IT)
- **MASTERLAB S.R.L.**
  70014 Conversano (BA) (IT)

(72) Inventors:
- **LOPERFIDO, Michele**
  70013 Castellana Grotte (Bari) (IT)
- **LAFRONZA, Lorenzo**
  70126 Bari (IT)
- **LECLERCQ, Pascal**
  25017 Sedena di Lonato del Garda (Brescia) (IT)

(74) Representative: **Rapisardi, Mariacristina**
Ufficio Brevetti Rapisardi S.r.l.
Via Serbelloni, 12
20122 Milano (IT)

(56) References cited:
EP-A1- 2 966 243
EP-A2- 2 873 787
DE-A1- 102013 205 061
GB-A- 2 224 770

Note: Within nine months of the publication of the mention of the grant of the European patent in the European Patent Bulletin, any person may give notice to the European Patent Office of opposition to that patent, in accordance with the Implementing Regulations. Notice of opposition shall not be deemed to have been filed until the opposition fee has been paid. (Art. 99(1) European Patent Convention).

EP 3 775 443 B1

Description

[0001] The present invention relates to a manual control device for manually controlling a lock of a door or window.

[0002] The known devices of this kind usually have a handle, a square drive pivot for driving a mechanism engaged in an axial cavity of the neck of the handle and a block for fixing the handle to a profile of the door or window.

[0003] Many of the presently known devices envisage a pre-assembly of some components which, due to the fact that it requires special tools, can be tricky and time-consuming. For this reason, sometimes it is preferable to provide the installer with a device already completely pre-assembled and ready for installation on the door or window.

[0004] In this case the installer does not have the possibility of adapting the configuration of the product from time to time to the specific door or window on which it must be mounted. In such a circumstance, for example in the case of doors or windows which differ in the length the square pivot must have for connection with the lock, it is necessary to provide products that differ only in the length of the square pivot.

[0005] It goes without saying that this considerably complicates the management of inventories and the product transport and supply logistics for the installer.

[0006] EP2966243 A1 discloses a manual control device for manually controlling a lock of a door or window according to the preamble of claim 1.

[0007] The technical task which the present invention sets itself is, therefore, to realise a manual control device for manually controlling a lock of a door or a window which makes it possible to eliminate the technical drawbacks complained of in the prior art.

[0008] Within this technical task, an object of the invention is to realise a manual control device for manually controlling a lock of a door or window which is versatile and adaptable for installation on various types of doors and windows.

[0009] Another object of the invention is to realise a manual control device for manually controlling a lock of a door or window that can be assembled in an extremely easy, quick and accurate way, even directly at the installation site.

[0010] Another object of the invention is to realise a manual control device for manually controlling a lock of a door or window that simplifies the storage and supply logistics of components.

[0011] Another object of the invention is to realise a manual control device for manually controlling a lock of a door or window that guarantees the necessary fixing stability and an appropriate balance of the forces acting on the various components.

[0012] The technical task, as well as these and other objects, according to the present invention are achieved by realising a manual control device for manually controlling a lock of a door or window, comprising a handle having a grip and an axially hollow neck, a drive pivot of the lock engaged in the axial cavity of the neck of the handle, a block that is fixable to a profile of the door or window, and a rotation bushing for rotating the handle that extends from said neck of the handle and engages a circular hole of said block into which said pivot is inserted, characterized in that said block supports a rotor module solid in rotation with said pivot and having quick locking means for extracting said pivot from said block, whereby

- after the block has initially been fixed, the drive pivot is inserted through the hole of the block and through the rotor module and then up to the achievement of engagement with the lock, and in that after removal of the handle with its rotation bushing from the drive pivot, a tool can act on the quick locking means such that the drive pivot can be extracted from the block in the opposite direction.

[0013] Preferably said rotor module has a support base supported in rotation by said block and having a passage opening for said pivot.

[0014] Preferably said support base is housed in said circular hole.

[0015] Preferably said support base is complementarily shaped with said circular hole.

[0016] Preferably said hole and said support base have mutual coupling and rotational guide means for said support base.

[0017] Preferably said quick locking means comprise at least one elastic element pivoted to said support base.

[0018] Preferably said elastic element is a square-frame shaped flat lamina inserted on said pivot, said flat lamina having at least two opposite sides in contact with two opposite sides of said pivot.

[0019] Preferably said flat lamina has an oscillation axis parallel to said two opposite sides thereof so as to vary the distance between said two opposite sides thereof in a direction that is orthogonal to said oscillation axis.

[0020] In a first embodiment of the invention said block is fixed to the profile of the door or window with screws.

[0021] In a second embodiment of the invention a housing of the end of the pivot provided on a plate of the lock supports a further rotor module solid in rotation with said pivot and having quick locking means for extracting said pivot from said housing.

[0022] Preferably said further rotor module has a support base supported in rotation in said housing and having a passage opening for said pivot, said quick locking means for extracting said pivot from said housing comprising at least one elastic element which is pivoted to said support base.

[0023] Preferably said elastic element in said further rotor module is a square-frame shaped flat lamina inserted on said pivot, said flat lamina having at least two opposite sides in contact with two opposite sides of said pivot.

[0024] Preferably said flat lamina in said further rotor module has an oscillation axis parallel to said two opposite sides thereof so as to vary the distance between said two opposite sides thereof in a direction that is orthogonal to said oscillation axis.

[0025] Further characteristics and advantages of the invention will more fully emerge from the description of a preferred but not exclusive embodiment of the manual control device of the control mechanism according to the invention, illustrated by way of non-limiting example in the accompanying figures of the drawings, in which:

figures 1 and 2 show a front and rear exploded perspective view of the device according to a first embodiment of the invention;
figure 3 shows a plan view of the block in which the rotor module of the device of figures 1 and 2 is mounted;
figure 4 shows an axial section view of a detail of the device of figures 1 and 2;
figures 5 and 6 show a front and rear exploded perspective view of the device according to a second embodiment of the invention;
figure 7 shows a plan view of the block in which the rotor module of the device of figures 5 and 6 is mounted;
figure 8 shows an axial section view of a detail of the device of figures 5 and 6;
figure 9 shows an exploded view of the setting plate of the mechanism and the further rotor element;
figure 10 shows a plan view of the plate of the lock housing the further rotor module of the device of figures 5 and 6; and
figure 11 shows the assembly of figure 10 sectioned along line A-A.

[0026] Equivalent parts in the various embodiments of the invention will be indicated with the same reference number.

[0027] With reference to the figures cited, a manual control device for manually controlling a lock of a door or window is shown, indicated in its entirety by reference number 1.

[0028] The device 1 comprises a handle 2 having a grip 8 and an axially hollow neck 7, a drive pivot 4 of the mechanism, a block 3 that is fixable to a profile of the door or window, and a rotation bushing 5 for rotating the handle 2 that extends from the neck 7 of the handle 2 and engages a circular hole 6 of the block 3.

[0029] The pivot 4, in this case a square pivot 4, is inserted in the hole 6 of the block 3 and through the rotation bushing 5 and engages in the axial cavity 9 of the neck 7 of the handle 2.

[0030] Advantageously, the block 3 supports a rotor module 10 solid in rotation with the square pivot 4 and having quick locking means for extracting the square pivot 4 from the block 3.

[0031] The rotor module 10 has a support base 11 supported in rotation by the block 3 and having a passage opening 12 for the square pivot 4.

[0032] The support base 11 is housed in the circular hole 6 in the block 3.

[0033] In particular, the support base 11 is complementarily shaped with the circular hole 6 in the block 3.

[0034] The hole 6 in the block 3 and the support base 11 have mutual coupling means that guide the rotation of the support base 11.

[0035] Such mutual coupling means comprise a peripheral circumferential groove 15 of the support base 11 and two diametrically opposing perimeter fins 13 which radially extend from the hole 6 toward the inside of the hole 6 itself and are engaged in the groove 15. The quick locking means for extracting the square pivot 4 from the block 3 comprise at least one elastic element which is pivoted to the support base 11.

[0036] The elastic element is a square-frame shaped flat lamina 14 inserted onto the square pivot 4.

[0037] The flat lamina 14 has at least two opposite sides 14', 14" in contact with two opposite sides 4', 4" of the square pivot 4.

[0038] The flat lamina 14 has an oscillation axis parallel to the two opposite sides 14', 14" thereof.

[0039] For this purpose, one of the two opposite sides 14', 14" of the flat lamina 14, in particular the side 14", is constrained to a hinge 16 provided on the support base 11.

[0040] As a result of the variation of their distance in a direction orthogonal to the oscillation axis of the two opposite sides 14', 14" of the flat lamina 14, depending on the direction of oscillation, they respectively loosen or tighten against the corresponding sides of the square pivot 4 to accommodate the insertion or respectively prevent the extraction of the square pivot 4 from the block 3.

[0041] The bushing 5 has quick locking means for locking the extraction of the square pivot 4. The quick locking means for locking the extraction of the square pivot 4 from the bushing 5 comprise an elastic element constrained to a plane 17 which is inclined with respect to the axis of the bushing 5.

[0042] The elastic element is once again a square-frame shaped flat lamina 18 inserted onto the square pivot 4.

[0043] The flat lamina 18 has at least two opposite sides 18', 18" in contact with the two opposite sides 4', 4" of the square pivot 4.

[0044] The flat lamina 18 has an oscillation axis parallel to the two opposite sides 18', 18" thereof.

[0045] More precisely, through a helical spring 19 suitably positioned in the bushing 5 and inserted onto the square pivot 4, the flat lamina 18 is constrained with one of the two opposite sides 18, 18", in particular with the side 18', to a side 17' of the inclined plane 17 which thus defines the oscillation axis of the flat lamina 18.

[0046] As a result of the variation of their distance in a direction orthogonal to the oscillation axis of the two

opposite sides 18', 18" of the flat lamina 18, depending on the direction of oscillation, they respectively loosen or tighten against the corresponding sides of the square pivot 4 to accommodate the insertion or respectively prevent the extraction of the square pivot 4 from the bushing 5.

[0047] For the fixing of the bushing 5 in the neck 7 of the handle 2 at least one anti-extraction screw 20 is provided, engaged in a hole 21 defined by grooves 22, 23 matching the cylindrical outer perimeter surface of the bushing 5 and the cylindrical inner perimeter surface of the neck 7 of the handle 2.

[0048] The rotation of the bushing 5 in the neck 7 of the handle 2 is also prevented by specific coupled interference elements 24, 25 that extend radially from the cylindrical outer perimeter surface of the bushing 5 and, respectively, from the cylindrical inner perimeter surface of the neck 7 of the handle 2.

[0049] The hole 6 and the bushing 5 also have interacting indexing means of the angular position of the handle 2.

[0050] The indexing means comprise depressions 26 on the outer perimeter of the bushing 5 and elastically yielding protrusions 27 on the perimeter of the hole 6.

[0051] The depressions 26 extend along axial generatrices of the bushing 5.

[0052] The protrusions 27 are obtained from the material of the body of the block 3 and/or are separate and independent parts fixed to the block 3.

[0053] In the illustrated case the protrusions 27 are formed either by tabs of the material of the body of the block 3 delimited on the long sides by reliefs 28 of the material of the body of the block 3, or by tabs embedded in specific seats 29 obtained in the block 3.

[0054] The block 3 is protected by a special mask having a hole 31 for the passage of the square pivot 4.

[0055] The indexing means allow the user to perceive the correct achievement of an operating state (for example, the door or window is open, closed, or lifted in the case of transom windows) when the protrusions 27 snap-engage in the depressions 26.

[0056] The provision of multiple indexed positions also contributes to increased security against burglary: if a neutral indexed position is provided between two indexed positions associated with the two operational states, the burglar must successfully pass two indexed positions to change the operating state of the door or window, and this undoubtedly lengthens the time required to break and enter the door or window.

[0057] With reference to the solution illustrated in figures 1-4, for mounting the device 1 on the door or window, holes 32 for fixing screws (not shown) are provided in the block 3 for fixing the block 3 to the profile of the door or window in the traditional manner.

[0058] The assembly of the device 1 takes place in the following way.

[0059] Initially the block 3 is fixed to the profile of the door or window through screws.

[0060] Then the square pivot 4 is inserted through the hole 6 of the block 3 and through the rotor module 10 until engaging the end of the square pivot 4 in its housing (not shown) provided in a known manner on a plate of the lock.

[0061] After insertion, the flat lamina 14 of the rotor module 10 prevents the extraction of the square pivot 4 from its housing.

[0062] Lastly the handle 2 is applied by inserting the bushing 5 in the free end of the square pivot 4 at a distance at least sufficient for the square pivot 4 to cross the flat lamina 18. After insertion, the flat lamina 18 prevents the extraction of the bushing 5 from the square pivot 4.

[0063] The disassembly of the device 1 is possible with the aid of a simple hairpin 40 with which access is given through a calibrated channel 41 to the flat lamina 18 so as to turn its lying plane in order to release the square pivot 4. Once the handle 2-bushing 5 assembly is removed, the square pivot 4 can be extracted from the housing of the lock with the use of the same hairpin 40 that acts on the flat lamina 14 this time.

[0064] Now with reference to the solution shown in figures 5-11, an alternative solution is proposed for mounting the device 1 on the door or window.

[0065] In a known manner, the lock comprises a plate 33 having a housing 34 of the end of the square pivot 4.

[0066] The housing 34 advantageously supports a further rotor module 35 solid in rotation with the square pivot 4 and having quick locking means for extracting the square pivot 4 from the housing 34.

[0067] The rotor module 35 has a support base 36 supported in rotation in the housing 34 and having a passage opening 37 for the square pivot 4.

[0068] To retain the rotor module 35 in its housing 34, a retaining plate 43 is applied to the latter through screws 42.

[0069] The quick locking means for extracting the square pivot 4 from the housing 34 comprise at least one elastic element which is pivoted to the support base 36.

[0070] Also in this case, the elastic element is a square-frame shaped flat lamina 38 inserted onto the square pivot 4.

[0071] The flat lamina 38 has at least two opposite sides 38', 38" in contact with the two opposite sides 4', 4" of the square pivot 4.

[0072] The flat lamina 38 has an oscillation axis parallel to two opposite sides 38', 38" thereof so as to vary the distance between the two opposite sides 38' 38" thereof in a direction that is orthogonal to the oscillation axis.

[0073] For this purpose, one of the two opposite sides 38', 38" of the flat lamina 38, in particular the side 38", is constrained to a hinge 39 provided on the support base 36.

[0074] As a result of the variation of their distance in a direction orthogonal to the oscillation axis of the two opposite sides 38', 38" of the flat lamina 38, depending on the direction of oscillation, they respectively loosen or

tighten against the corresponding sides of the square pivot 4 to accommodate the insertion or respectively prevent the extraction of the square pivot 4 from the housing 34.

[0075] The assembly of the device 1 takes place in the following way.

[0076] Initially the square pivot 4 is inserted through the rotor module 35 until engaging the end of the square pivot 4 in its housing 34.

[0077] After insertion, the flat lamina 38 of the rotor module 35 prevents the extraction of the square pivot 4 from its housing 34.

[0078] At this point, the block 3 can be inserted in the square pivot 4 until it crosses the flat lamina 14 of the rotor module 10 and abuts against the profile of the door or window. After insertion, the flat lamina 14 of the rotor module 10 prevents the extraction of the block 3 from the square pivot 4.

[0079] Lastly the handle 2 is applied by inserting the bushing 5 in the free end of the square pivot 4 at a distance at least sufficient for the square pivot 4 to cross the flat lamina 18. After insertion, the flat lamina 14 prevents the extraction of the bushing 5 from the square pivot 4.

[0080] The disassembly of the device 1 is possible with the aid of a simple hairpin 40 with which access is given through a calibrated channel 41 to the flat lamina 18 so as to turn its lying plane in order to release the square pivot 4. Once the handle 2-bushing 5 assembly is removed, the block 3 can be extracted from the square pivot 4 with the use of the same hairpin 40 that acts this time on the flat lamina 14, and finally the square pivot 4 can be removed from the housing 34 with the use of the same hairpin 40 that acts on the flat lamina 38 this time.

[0081] The manual control device according to the invention advantageously has a structure which can be easily and quickly assembled and disassembled.

[0082] The position of the square pivot can also be adjusted in a versatile manner directly at the installation site according to the specific door or window on which the device is installed. Finally, the manual control device according to the invention can advantageously be installed on only one side of the door or window or on both sides of the door or window. The manual control device as conceived herein is susceptible of numerous modifications and variants, all falling within the scope of the invention as defined by the claims.

[0083] In practice the materials used, as well as the dimensions, can be any according to the needs and the state of the art.

Claims

1. A manual control device (1) for manually controlling a lock of a door or window, comprising a handle (2) having a grip (8) and an axially hollow neck (7), a drive pivot (4) engaged in the axial cavity (9) of the neck (7) of the handle (2), a block (3) that is fixable to a profile of the door or window, and a rotation bushing (5) for rotating the handle (2) that extends from said neck (7) of the handle (2) and engages a circular hole (6) of said block (3) into which said pivot (4) is inserted, **characterized in that** said block (3) supports a rotor module (10) solid in rotation with said pivot (4) and having quick locking means for extracting said pivot (4) from said block (3), and **in that**, after the block (3) has initially been fixed, the drive pivot (4) is inserted through the hole (6) of the block (3) and through the rotor module (10) and then up to the achievement of engagement with the lock, and **in that** after removal of the handle (2) with its rotation bushing (5) from the drive pivot (4), a tool can act on the quick locking means such that the drive pivot (4) can be extracted from the block (3) in the opposite direction.

2. The manual control device (1) according to claim 1, **characterized in that** said rotor module (10) has a support base (11) supported in rotation by said block (3) and having a passage opening (12) for said pivot (4).

3. The manual control device (1) according to the preceding claim, **characterized in that** said support base (11) is housed in said circular hole (6).

4. The manual control device (1) according to the preceding claim, **characterized in that** said support base (11) is complementarily shaped with said circular hole (6).

5. The manual control device (1) according to the preceding claim, **characterized in that** said hole (6) and said support base (11) have mutual coupling and rotational guide means for said support base (11).

6. The manual control device (1) according to any one of claims 2 to 5, **characterized in that** said quick locking means comprises at least one elastic element pivoted to said support base (11).

7. The manual control device (1) according to the preceding claim, **characterized in that** said elastic element is a square-frame shaped flat lamina (14) inserted on said pivot (4), said flat lamina (14) having at least two opposite sides (14', 14") in contact with two opposite sides (4', 4") of said pivot (4).

8. The manual control device (1) according to the preceding claim, **characterized in that** said flat lamina (14) has an oscillation axis parallel to said two opposite sides (14', 14'') thereof so as to vary the distance between said two opposite sides (14', 14'') thereof in a direction that is orthogonal to said oscillation axis.

9. The manual control device (1) according to any preceding claim, **characterized in that** said bushing (5) has quick locking means for locking the extraction of said pivot (4) from said bushing (5).

10. The manual control device (1) according to any preceding claim, **characterized in that** said engaging hole (6) and said bushing (5) have interacting indexing means (26, 27) of the angular position of said handle (2) comprising depressions (26) on the outer perimeter of said bushing (5) and of the elastically yielding protrusions (27) on the perimeter of said engaging hole (6).

11. The manual control device (1) according to the preceding claim, **characterized in that** said protrusions (27) are obtained from the material of the body of said block (3) and/or are separate and independent parts fixed to said block (3).

12. The manual control device (1) according to any preceding claim, **characterized in that** said lock comprises a plate (33) having a housing (34) of the end of the pivot (4), said housing (34) supporting a further rotor module (35) solid in rotation with said pivot (4) and having quick locking means for locking the extraction of said pivot (4) from said housing (34).

13. The manual control device (1) according to the preceding claim, **characterized in that** said further rotor module (35) housed in said plate (33) has a support base (36) supported in rotation in said housing (34) and having a passage opening (37) for said pivot (4), said quick locking means for extracting said pivot (4) from said housing (34) comprising at least one elastic element pivoted to said support base (36).

14. The manual control device (1) according to the preceding claim, **characterized in that** said elastic element in said further rotor module (35) is a square-frame shaped flat lamina (38) inserted on said pivot (4), said flat lamina (38) having at least two opposite sides (38', 38'') in contact with two opposite sides (4', 4") of said pivot (4).

15. The manual control device (1) according to the preceding claim, **characterized in that** said flat lamina (38) in said further rotor module (35) has an oscillation axis parallel to said two opposite sides (38', 38") thereof so as to vary the distance between said two opposite sides (38', 38") thereof in a direction that is orthogonal to said oscillation axis.

16. A door or window **characterized in that** it has a manual control device (1) of the lock according to any preceding claim.

Patentansprüche

1. Eine manuelle Steuervorrichtung (1) zur manuellen Steuerung eines Schlosses einer Tür oder eines Fensters, die einen Griff (2) mit einem Griffbereich (8) und einem axial hohlen Hals (7) umfasst, einen Antriebszapfen (4), der in den axialen Hohlraum (9) des Halses (7) des Griffs (2) eingesetzt ist, einen Block (3), der an einem Profil der Tür oder des Fensters befestigbar ist, und eine Drehlagerbuchse (5) zum Drehen des Griffs (2), die sich von dem Hals (7) des Griffs (2) erstreckt und ein kreisförmiges Loch (6) des Blocks (3) greift, in das der Antriebszapfen (4) eingeführt ist, **dadurch gekennzeichnet, dass** der Block (3) ein Rotormodul (10) trägt, das drehfest mit dem Antriebszapfen (4) verbunden ist und Schnellverriegelungsmittel zum Herausziehen des Antriebszapfens (4) aus dem Block (3) aufweist, und dass, nachdem der Block (3) zunächst befestigt wurde, der Antriebszapfen (4) durch das Loch (6) des Blocks (3) und durch das Rotormodul (10) eingeführt wird und bis zum Erreichen des Eingriffs mit dem Schloss geführt wird, und dass nach dem Entfernen des Griffs (2) mit seiner Drehlagerbuchse (5) vom Antriebszapfen (4) ein Werkzeug auf die Schnellverriegelungsmittel einwirken kann, so dass der Antriebszapfen (4) in die entgegengesetzte Richtung aus dem Block (3) herausgezogen werden kann.

2. Die manuelle Steuervorrichtung (1) nach Anspruch 1, **dadurch gekennzeichnet, dass** das Rotormodul (10) eine Trägerbasis (11) aufweist, die drehbar von dem Block (3) getragen wird und eine Durchgangsöffnung (12) für den Antriebszapfen (4) aufweist.

3. Die manuelle Steuervorrichtung (1) nach dem vorangegangenen Anspruch, **dadurch gekennzeichnet, dass** die Trägerbasis (11) in dem kreisförmigen Loch (6) untergebracht ist.

4. Die manuelle Steuervorrichtung (1) nach dem vorangegangenen Anspruch, **dadurch gekennzeichnet, dass** die Trägerbasis (11) komplementär zu dem kreisförmigen Loch (6) geformt ist.

5. Die manuelle Steuervorrichtung (1) nach dem vorangegangenen Anspruch, **dadurch gekennzeichnet, dass** das Loch (6) und die Trägerbasis (11) wechselseitige Koppelungs- und Drehlagerführungsmittel für die Trägerbasis (11) aufweisen.

6. Die manuelle Steuervorrichtung (1) nach einem der Ansprüche 2 bis 5, **dadurch gekennzeichnet, dass** die Schnellverriegelungsmittel mindestens ein elastisches Element umfassen, das an der Trägerbasis (11) angelenkt ist.

7. Die manuelle Steuervorrichtung (1) nach dem vorangegangenen Anspruch, **dadurch gekennzeichnet, dass** das elastische Element eine flache, rahmenförmige Lamelle (14) ist, die auf den Antriebszapfen (4) aufgesetzt ist, wobei die flache Lamelle (14) mindestens zwei gegenüberliegende Seiten (14', 14") aufweist, die mit zwei gegenüberliegenden Seiten (4', 4") des Antriebszapfens (4) in Kontakt stehen.

8. Die manuelle Steuervorrichtung (1) nach dem vorangegangenen Anspruch, **dadurch gekennzeichnet, dass** die flache Lamelle (14) eine Schwingungsachse aufweist, die parallel zu den zwei gegenüberliegenden Seiten (14', 14") der Lamelle verläuft, sodass der Abstand zwischen den zwei gegenüberliegenden Seiten (14', 14") der Lamelle in einer Richtung variiert werden kann, die orthogonal zu dieser Schwingungsachse ist.

9. Die manuelle Steuervorrichtung (1) nach einem der vorhergehenden Ansprüche, **dadurch gekennzeichnet, dass** die Buchse (5) Schnellverriegelungsmittel zum Verriegeln des Herausziehens des Antriebszapfens (4) aus der Buchse (5) aufweist.

10. Die manuelle Steuervorrichtung (1) nach einem der vorhergehenden Ansprüche, **dadurch gekennzeichnet, dass** das Eingriffsloch (6) und die Buchse (5) miteinander wirkende Indexierungsmittel (26, 27) der Winkelposition des Griffs (2) aufweisen, die Vertiefungen (26) am äußeren Umfang der Buchse (5) und elastisch nachgebende Vorsprünge (27) am Umfang des Eingriffslochs (6) umfassen.

11. Die manuelle Steuervorrichtung (1) nach dem vorhergehenden Anspruch, **dadurch gekennzeichnet, dass** die Vorsprünge (27) aus dem Material des Körpers des Blocks (3) hergestellt sind und/oder separate und unabhängige Teile sind, die am Block (3) befestigt sind.

12. Die manuelle Steuervorrichtung (1) nach einem der vorhergehenden Ansprüche, **dadurch gekennzeichnet, dass** das Schloss eine Platte (33) umfasst, die eine Aufnahme (34) für das Ende des Antriebszapfens (4) aufweist, wobei die Aufnahme (34) ein weiteres Rotormodul (35) trägt, das drehfest mit dem Antriebszapfen (4) verbunden ist und Schnellverriegelungsmittel zum Verriegeln des Herausziehens des Antriebszapfens (4) aus der Aufnahme (34) aufweist.

13. Die manuelle Steuervorrichtung (1) nach dem vorhergehenden Anspruch, **dadurch gekennzeichnet, dass** das weitere Rotormodul (35), das in der Platte (33) untergebracht ist, eine Trägerbasis (36) aufweist, die drehbar in der Aufnahme (34) gelagert ist und eine Durchgangsöffnung (37) für den Antriebszapfen (4) besitzt, wobei die Schnellverriegelungsmittel zum Herausziehen des Antriebszapfens (4) aus der Aufnahme (34) mindestens ein elastisches Element umfassen, das an der Trägerbasis (36) angelenkt ist.

14. Die manuelle Steuervorrichtung (1) nach dem vorhergehenden Anspruch, **dadurch gekennzeichnet, dass** das elastische Element in dem weiteren Rotormodul (35) eine flache, rahmenförmige Lamelle (38) ist, die auf den Antriebszapfen (4) aufgesetzt ist, wobei die flache Lamelle (38) mindestens zwei gegenüberliegende Seiten (38', 38") aufweist, die mit zwei gegenüberliegenden Seiten (4', 4") des Antriebszapfens (4) in Kontakt stehen.

15. Die manuelle Steuervorrichtung (1) nach dem vorhergehenden Anspruch, **dadurch gekennzeichnet, dass** die flache Lamelle (38) in dem weiteren Rotormodul (35) eine Schwingungsachse aufweist, die parallel zu den zwei gegenüberliegenden Seiten (38', 38") der Lamelle verläuft, sodass der Abstand zwischen den zwei gegenüberliegenden Seiten (38', 38") der Lamelle in einer Richtung variiert werden kann, die orthogonal zu dieser Schwingungsachse ist.

16. Eine Tür oder ein Fenster, **dadurch gekennzeichnet, dass** es eine manuelle Steuervorrichtung (1) des Schlosses nach einem der vorhergehenden Ansprüche aufweist.

Revendications

1. Dispositif de commande manuelle (1) pour commander manuellement une serrure d'une porte ou d'une fenêtre, comprenant une poignée (2) ayant une prise (8) et un col axial creux (7), un pivot d'entraînement (4) engagé dans la cavité axiale (9) du col (7) de la poignée (2), un bloc (3) qui est fixable à un profilé de la porte ou de la fenêtre, et une bague de rotation (5) pour faire tourner la poignée (2) qui s'étend depuis le col (7) de la poignée (2) et engage un trou circulaire (6) dudit bloc (3) dans lequel est inséré ledit pivot (4), **caractérisé en ce que** ledit bloc (3) supporte un module de rotor (10) solidaire en rotation avec ledit pivot (4) et comprenant des moyens de verrouillage rapide pour extraire ledit pivot (4) dudit bloc (3), et **en ce qu'**après que le bloc (3) a été initialement fixé, le pivot d'entraînement (4) est inséré à travers le trou (6) du bloc (3) et à travers le module de rotor (10), puis jusqu'à l'engagement avec la serrure, et **en ce qu'**après le retrait de la poignée (2) avec sa bague de rotation (5) du pivot d'entraînement (4), un outil peut agir sur les moyens de verrouillage rapide de sorte que le pivot d'entraînement (4) puisse être extrait du

bloc (3) dans la direction opposée.

2. Le dispositif de commande manuelle (1) selon la revendication 1, **caractérisé en ce que** ledit module de rotor (10) comporte une base de support (11) supportée en rotation par ledit bloc (3) et ayant une ouverture de passage (12) pour ledit pivot (4).

3. Le dispositif de commande manuelle (1) selon la revendication précédente, **caractérisé en ce que** ladite base de support (11) est logée dans ledit trou circulaire (6).

4. Le dispositif de commande manuelle (1) selon la revendication précédente, **caractérisé en ce que** ladite base de support (11) est formée de manière complémentaire avec ledit trou circulaire (6).

5. Le dispositif de commande manuelle (1) selon la revendication précédente, **caractérisé en ce que** ledit trou (6) et ladite base de support (11) comportent des moyens d'accouplement et de guidage en rotation pour ladite base de support (11).

6. Le dispositif de commande manuelle (1) selon l'une quelconque des revendications 2 à 5, **caractérisé en ce que** lesdits moyens de verrouillage rapide comprennent au moins un élément élastique articulé à ladite base de support (11).

7. Le dispositif de commande manuelle (1) selon la revendication précédente, **caractérisé en ce que** ledit élément élastique est une lame plate en forme de cadre carré (14) insérée sur ledit pivot (4), ladite lame plate (14) ayant au moins deux côtés opposés (14', 14'') en contact avec deux côtés opposés (4', 4'') dudit pivot (4).

8. Le dispositif de commande manuelle (1) selon la revendication précédente, **caractérisé en ce que** ladite lame plate (14) a un axe d'oscillation parallèle auxdits deux côtés opposés (14', 14") de celle-ci de manière à faire varier la distance entre lesdits deux côtés opposés (14', 14") dans une direction orthogonale audit axe d'oscillation.

9. Le dispositif de commande manuelle (1) selon l'une quelconque des revendications précédentes, **caractérisé en ce que** ladite bague (5) comporte des moyens de verrouillage rapide pour bloquer l'extraction dudit pivot (4) de ladite bague (5).

10. Le dispositif de commande manuelle (1) selon l'une quelconque des revendications précédentes, **caractérisé en ce que** ledit trou d'engagement (6) et ladite bague (5) comportent des moyens d'indexation interactifs (26, 27) de la position angulaire de ladite poignée (2), comprenant des dépressions (26) sur le périmètre extérieur de ladite bague (5) et des saillies à élasticité déformable (27) sur le périmètre dudit trou d'engagement (6).

11. Le dispositif de commande manuelle (1) selon la revendication précédente, **caractérisé en ce que** lesdites saillies (27) sont obtenues à partir du matériau du corps dudit bloc (3) et/ou sont des pièces séparées et indépendantes fixées audit bloc (3).

12. Le dispositif de commande manuelle (1) selon l'une quelconque des revendications précédentes, **caractérisé en ce que** ladite serrure comprend une plaque (33) ayant un logement (34) pour l'extrémité du pivot (4), ledit logement (34) supportant un autre module de rotor (35) solidaire en rotation avec ledit pivot (4) et comportant des moyens de verrouillage rapide pour bloquer l'extraction dudit pivot (4) dudit logement (34).

13. Le dispositif de commande manuelle (1) selon la revendication précédente, **caractérisé en ce que** ledit autre module de rotor (35) logé dans ladite plaque (33) comporte une base de support (36) supportée en rotation dans ledit logement (34) et ayant une ouverture de passage (37) pour ledit pivot (4), lesdits moyens de verrouillage rapide pour extraire ledit pivot (4) dudit logement (34) comprenant au moins un élément élastique articulé à ladite base de support (36).

14. Le dispositif de commande manuelle (1) selon la revendication précédente, **caractérisé en ce que** ledit élément élastique dans ledit autre module de rotor (35) est une lame plate en forme de cadre carré (38) insérée sur ledit pivot (4), ladite lame plate (38) ayant au moins deux côtés opposés (38', 38'') en contact avec deux côtés opposés (4', 4") dudit pivot (4).

15. Le dispositif de commande manuelle (1) selon la revendication précédente, **caractérisé en ce que** ladite lame plate (38) dans ledit autre module de rotor (35) a un axe d'oscillation parallèle auxdits deux côtés opposés (38', 38") de celle-ci de manière à faire varier la distance entre lesdits deux côtés opposés (38', 38") dans une direction orthogonale audit axe d'oscillation.

16. Une porte ou une fenêtre **caractérisée en ce qu'**elle comporte un dispositif de commande manuelle (1) de la serrure selon l'une quelconque des revendications précédentes.

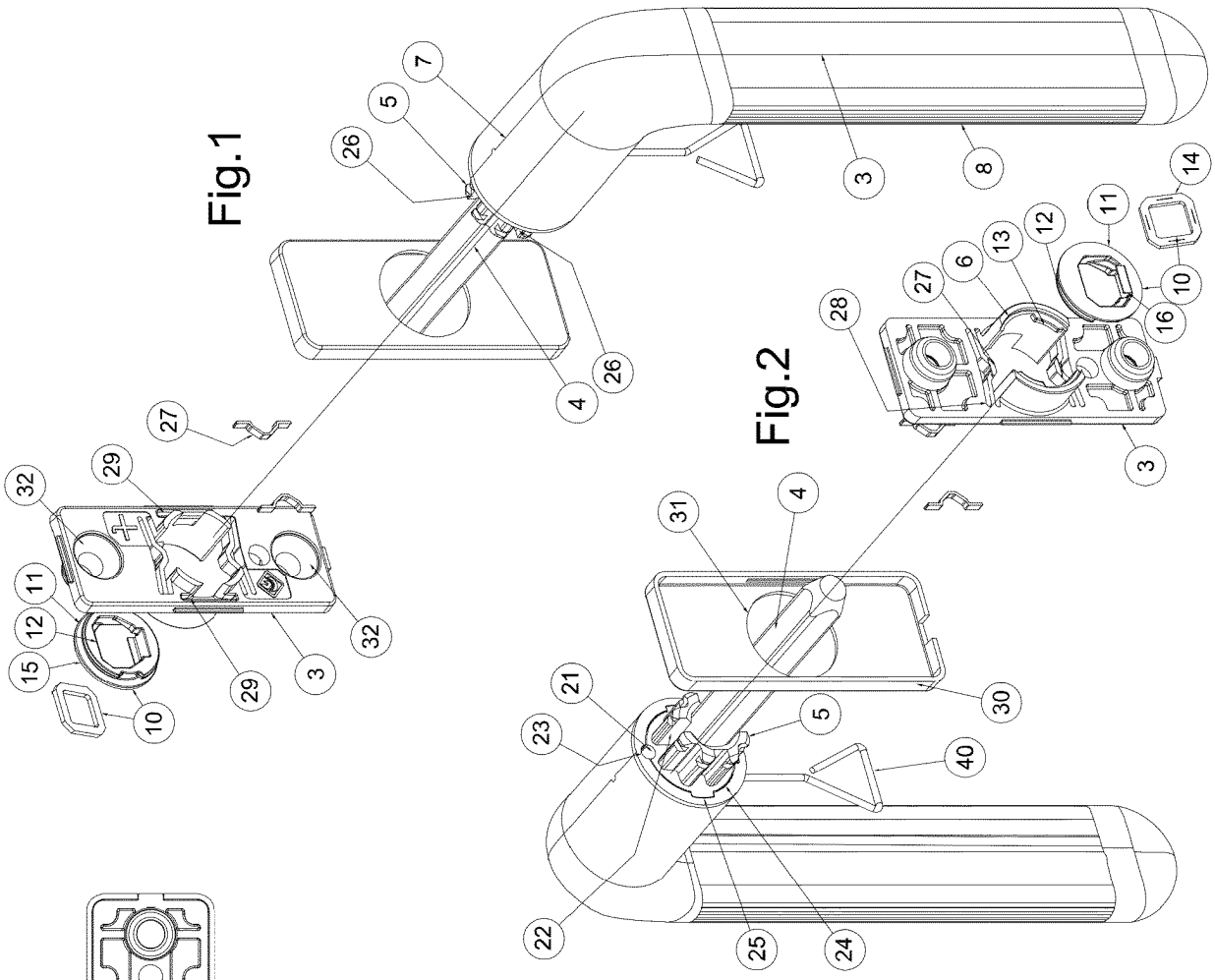
Fig.1
Fig.2
Fig.3
Fig.4

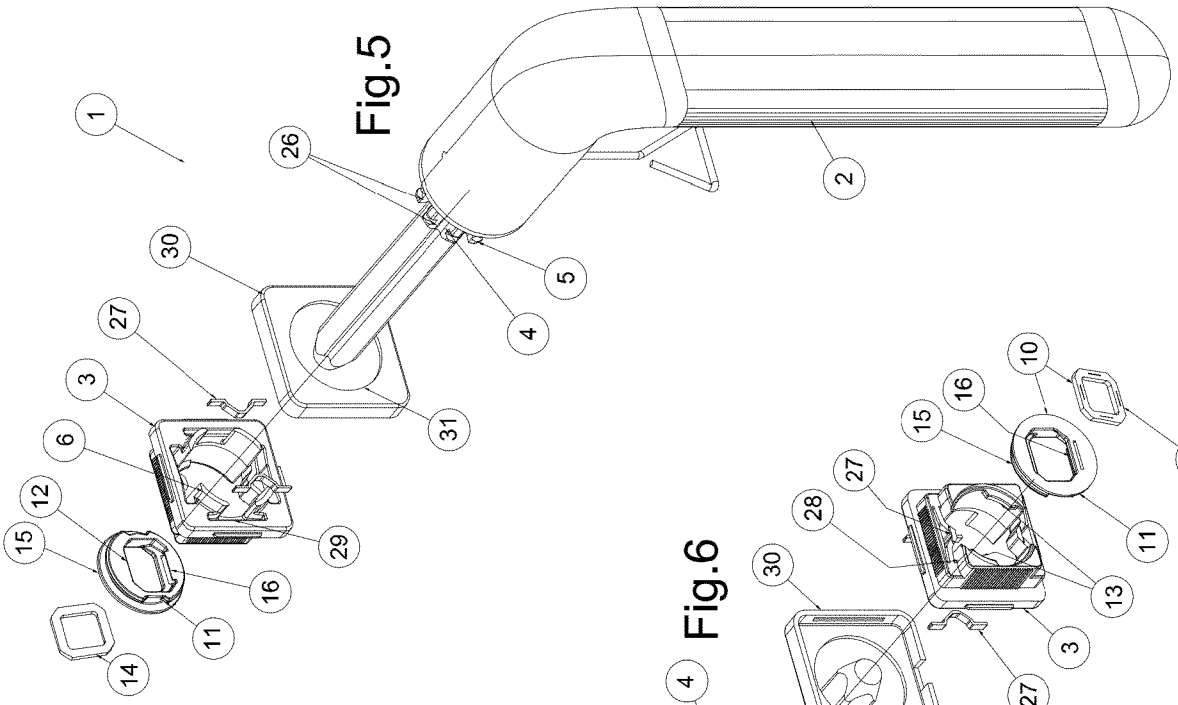

Fig.5

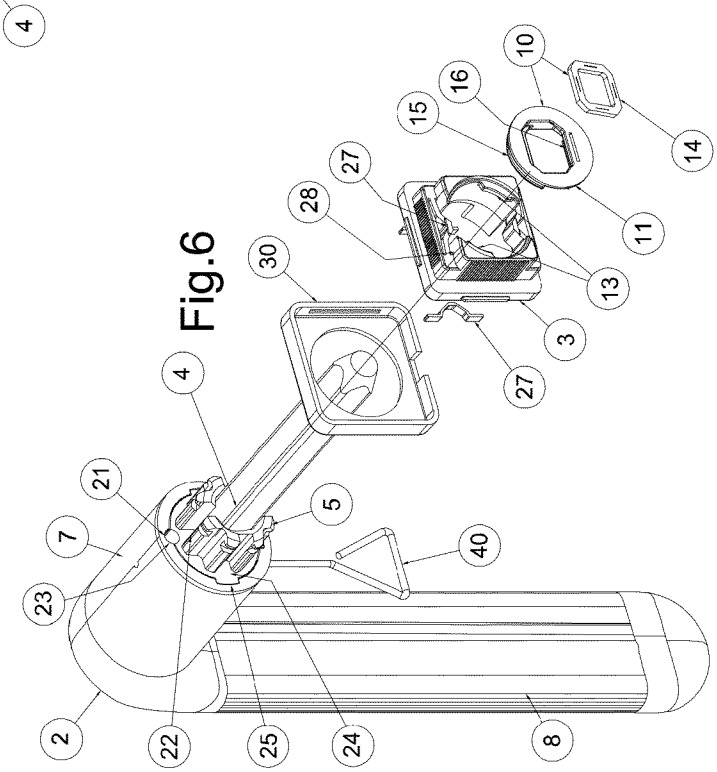

Fig.6

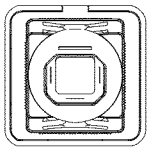

Fig.7

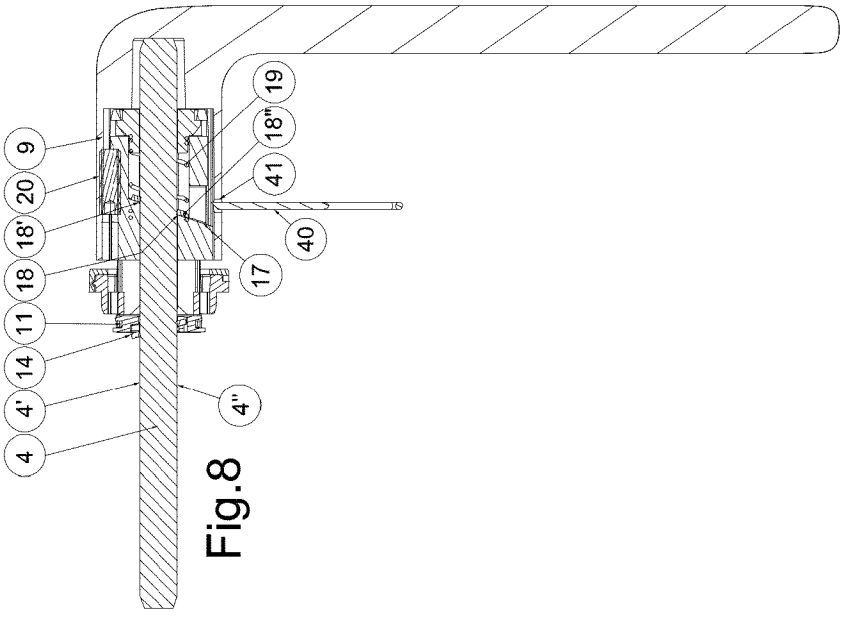

Fig.8

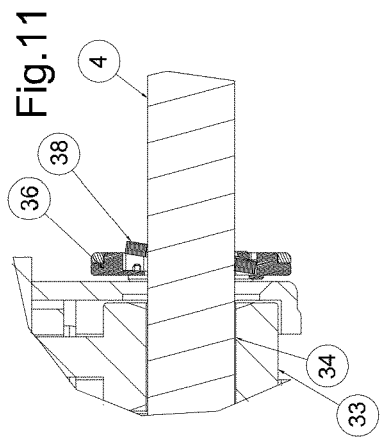

Fig.11

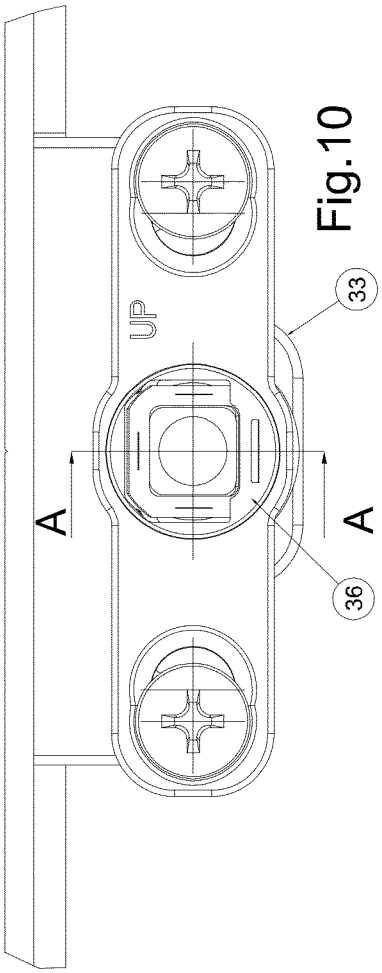

Fig.10

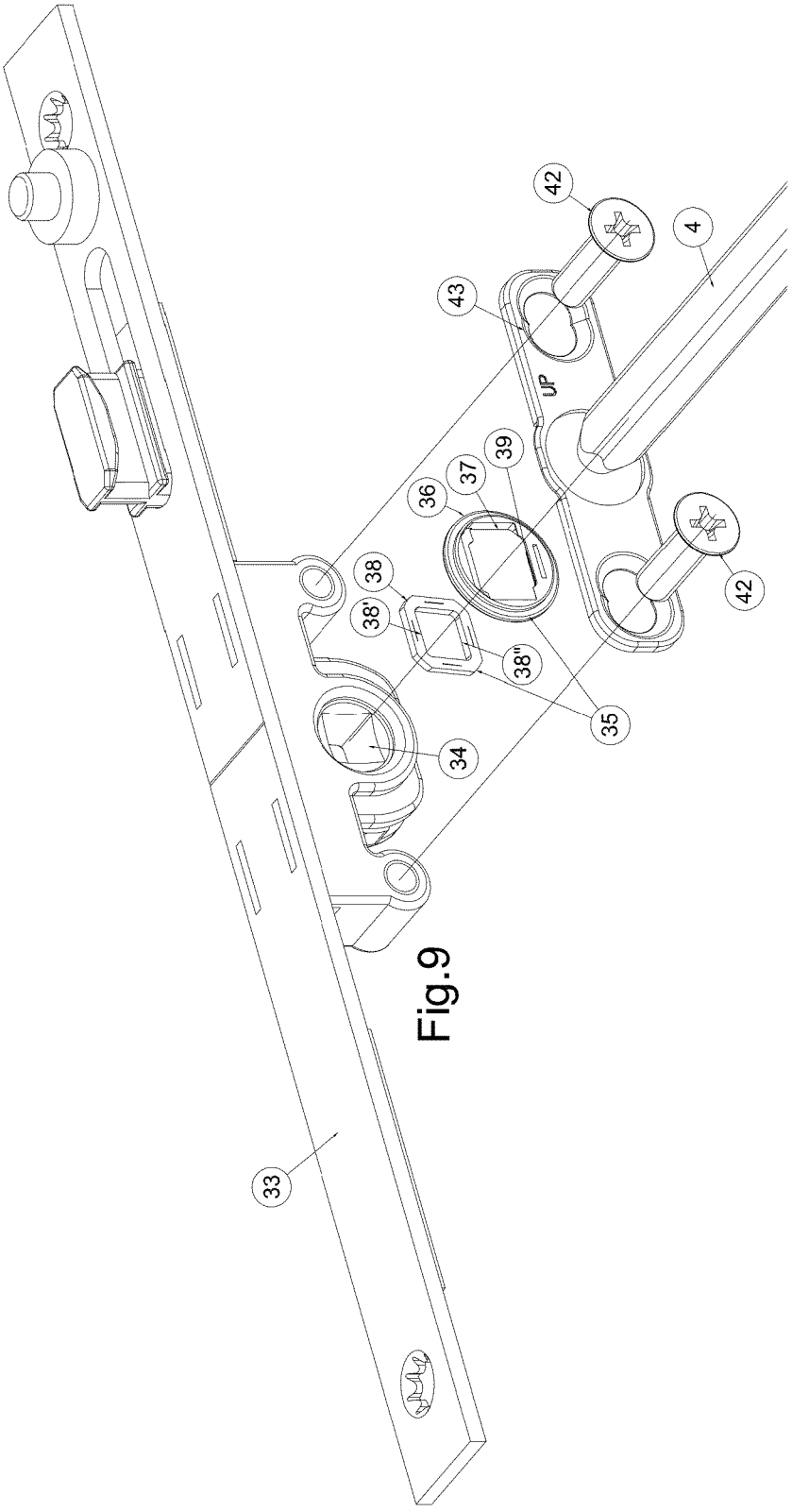

Fig.9

REFERENCES CITED IN THE DESCRIPTION

This list of references cited by the applicant is for the reader's convenience only. It does not form part of the European patent document. Even though great care has been taken in compiling the references, errors or omissions cannot be excluded and the EPO disclaims all liability in this regard.

Patent documents cited in the description

- EP 2966243 A1 **[0006]**