June 3, 1941. R. PATERAS PESCARA 2,244,215

FREE PISTON MACHINE

Filed Feb. 16, 1939

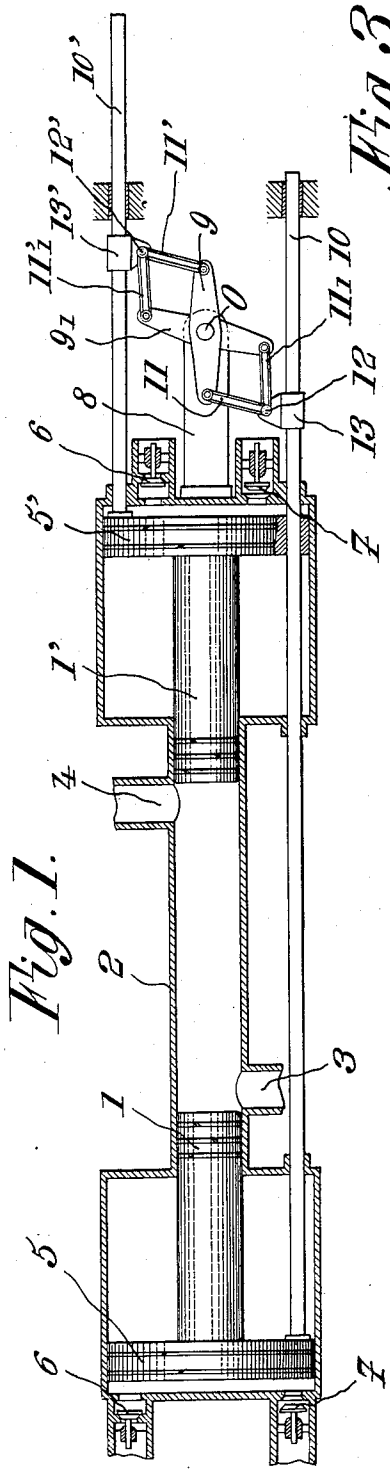

Fig. 1.

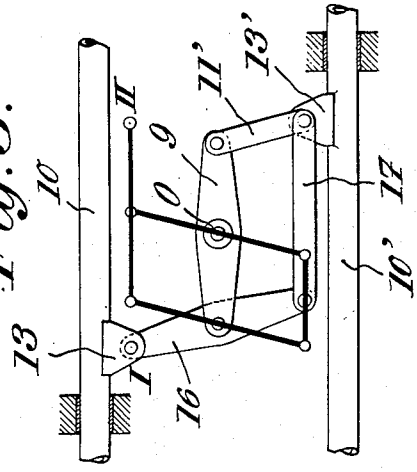

Fig. 3.

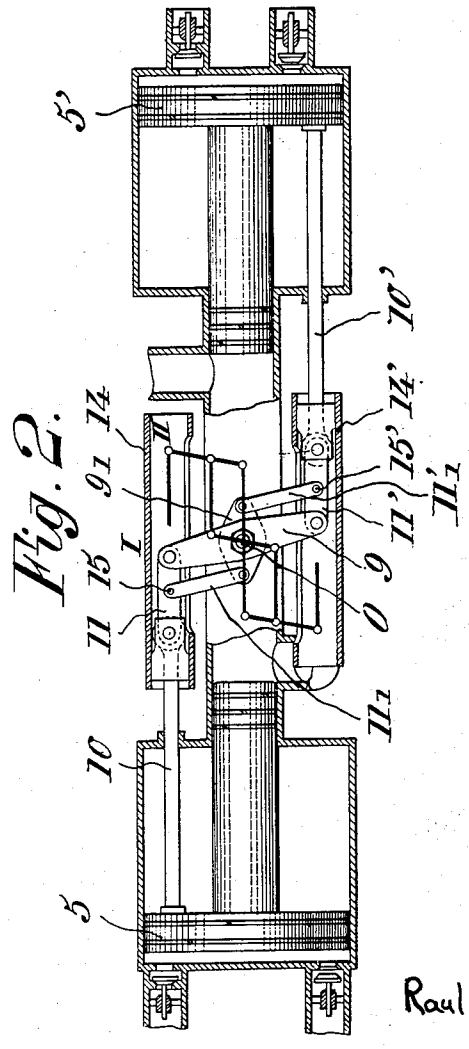

Fig. 2.

Raul Pateras Pescara
Inventor

Bailey & Larson
Attorneys

Patented June 3, 1941 2,244,215

UNITED STATES PATENT OFFICE

2,244,215

FREE PISTON MACHINE

Raul Pateras Pescara, Paris, France, assignor of one-fifth to Societe d'Etudes et de Participations Eau, Gaz, Electricite, Energie S. A., Geneva, Switzerland, a society of Switzerland

Application February 16, 1939, Serial No. 256,751
In Luxemburg February 19, 1938

13 Claims. (Cl. 74—110)

The present invention relates to mechanisms for synchronizing the displacements of the parts, moving in a reciprocating manner in opposite directions, of a free piston machine, that is to say of a machine the pistons of which can have variable strokes.

It is known to constitute such mechanisms by connecting the reciprocating parts in question, which are to be synchronized, to the ends of oscillating levers, through the medium of simple connecting rods, said oscillating levers being generally disposed on either side of the machine, respectively, and being either of parallel directions or of crossed directions, as the case may be.

But this structure produces, during the working of the machine, inertia forces directed at right angles to the direction of the displacements of the reciprocating parts. These inertia forces create, in the case of a machine provided with oscillating levers parallel to each other, an alternating torque which tends to produce an oscillation of the machine about a transverse axis, and, in the case of a machine the oscillating levers of which are of crossed arrangement, instantaneous torques which tend to rotate the reciprocating parts in question about their axis.

It has been suggested, in order to avoid this drawback, to interconnect the reciprocating parts which are to be synchronized through the medium of kinematic systems known as "lazy tongs," in which systems the detrimental reactions compensate one another. These systems were then pivoted about a fixed axis passing through their center of symmetry, but their points of fixation to the reciprocating parts of the machine were so located that the axis of symmetry of said systems remained constantly parallel to the axis of the machine.

In other words, the longitudinal displacements of said reciprocating parts could take place only owing to the deformation of the balanced kinematic mechanisms. Therefore it was necessary, with this construction, to give these balanced mechanisms relatively important dimensions, and therefore masses, which was disadvantageous for the obtainment of high rates of operation of the machine, if it was desired to make possible normal maximum displacements of these reciprocating parts.

The chief object of the present invention is to provide a mechanism of the type above described which is better adapted to meet the requirements of practice than similar mechanisms made up to this time and, in particular, free from the disadvantages above set forth.

According to the present invention, in order to reduce the volume and the mass of the mechanism in question, it is constituted by a kinematic system which is devised in such manner as to comply with either of the two following conditions:

a. The reactions normal to the path of movement of the reciprocating parts compensate one another in the mechanism itself, at any time of the operation thereof, said mechanism being then arranged to oscillate about a fixed axis;

b. Or, alternately, the reactions normal to the path of travel of the reciprocating parts are transmitted to at least one rigid element arranged in such manner as to undergo simultaneously the reactions of opposed direction, so as to balance them on said element.

Other features of the present invention will result from the following detailed description of some specific embodiments thereof.

Preferred embodiments of the present invention will be hereinafter described, with reference to the accompanying drawing, given merely by way of example, and in which:

Fig. 1 diagrammatically shows, in axial sectional view, a free piston machine the reciprocating parts of which are synchronized through a mechanism made according to a first embodiment of the present invention;

Fig. 2 is a view, similar to Fig. 1, showing another embodiment, of the same kind as that of Fig. 1;

Fig. 3 shows, in diagrammatic sectional view, a modification of the synchronizing means of Fig. 2.

In the following description, the invention will be set forth as applied to a free piston machine made in any suitable conventional manner. For instance, as shown by Fig. 1, this machine is a motor-compressor including, on the one hand, two motor pistons 1 and 1' mounted in a cylinder 2 the wall of which is provided with inlet ports 3 and outlet ports 4 which are opened, respectively by said pistons 1 and 1', when are moving close to the ends of their outward strokes, and on the other hand, compressor pistons 5 and 5', respectively rigid with said pistons 1 and 1' and adapted to coact with cylinders provided with suction valves 6 and discharge valves 7.

The object of the invention is to provide a device for synchronizing the displacements, in opposed directions, of the reciprocating parts of said machine.

According to the present invention, I proceed as follows:

First, according to one embodiment of my invention, I interconnect the displacements of the reciprocating parts of said machine through a kinematic system which is balanced (that is to say a system in which the normal reactions of opposed directions which take place during the operation of the system destroy each other at any time) and which is pivotally connected to said reciprocating parts at points chosen in such manner that the whole of said system oscillates about a fixed axis during the operation of the machine.

With such an arrangement, it is possible to make this kinematic system of dimensions considerably smaller than those which were necessary when said system worked merely by deformation as in the prior arrangements.

This is due to the fact that the displacements of the reciprocating parts in question are made possible:

a. Partly by the oscillating movement of the whole of the balanced system, and

b. Partly by the deformation of said balanced system.

The dimensions of said balanced system, which determine the maximum amplitude of its deformations, can therefore be chosen lower than those of a system of this kind the deformations of which would correspond to the whole of the stroke of the reciprocating parts of the machine.

Then, advantageously, as it will be supposed in the following description, said balanced system is constituted by two similar elements disposed on either side of the machine.

Of course, there are many possible practical embodiments of this system, but I have found that it is advantageous, in practice, to make use of one of the following embodiments, in which the kinematic system constitutes a "lazy tongs" mechanism, or an equivalent mechanical system.

According to the first of these embodiments, each of said systems is constituted by an assembly of oscillating connecting rods and levers, adapted to pivot about a fixed axis **0** and constituting a "lazy tongs" system the ends of which are pivoted to pieces respectively rigid with each of the reciprocating parts of the machine, at points of said pieces located on opposite sides of the plane, parallel to the paths of movement of said reciprocating parts, passing through axis **0**.

An embodiment complying with these conditions is shown by way of example by Fig. 1.

The pivot axis **0** is carried by an arm **8** fixed in line with the frame of the machine.

On this pivot axis are pivoted two crossed oscillating levers **9** and 9_1, and the ends of these oscillating levers are connected to sliding rods **10** and **10'**, rigid respectively with the reciprocating parts of the machine through connecting rods forming deformable parallelograms with said oscillating levers. For instance, oscillating lever **9** is connected to sliding rods **10** and **10'** through connecting rods **11** and **11'** and oscillating lever **9'** is connected to sliding rods **10** and **10'** through connecting rods 11_1 and $11'_1$. The connecting rods corresponding to each of said sliding rods are pivoted about a common axis **12** or **12'** carried by a piece **13** or **13'**, rigidly fixed on the corresponding rod.

According to a second embodiment of the present invention, which is illustrated by Fig. 2 of the drawing, the synchronizing means are housed in the median part of the machine.

Advantageously, in this case, the fixed axis **0** is arranged in such manner that it projects on either side of the cylinder.

The respective inner faces of the compressor pistons **5** and **5'** carry sliding rods **10** and **10'** the ends of which project from the corresponding compressor cylinders and are, preferably, guided at least by one slide way, for instance slideways **14** and **14'**, said sliding rods being arranged in such manner that their ends occupy at any time symmetrical positions with respect to axis **0**.

The displacements of the ends of said sliding rods are combined, in such manner as to synchronize them, respectively through connecting rods **11** **11'**, with those of the ends of an oscillating lever **9** adapted to oscillate about axis **0**.

In order to balance the perturbing normal reactions, the mechanism further includes a second oscillating lever 9_1, of shorter length than oscillating lever **9**, the ends of which are respectively connected to connecting rods **11** and **11'** through small connecting rods **11'** and $11'_1$, respectively, in such manner that oscillating levers **9** and **9'**, connecting rods **11** and **11'** and connecting rods 11_1 and $11'_1$ form symmetrical deformable parallelograms. Connecting rods 11_1 and $11'_1$ are pivoted to connecting rods **11** and **11'** through axes **15** and **15'**, preferably positioned between the extreme pivoting axes of said connecting rods.

Such a mechanism, in which the normal reactions balance each other at any time of its operation, can come to occupy, according as the reciprocating parts of the machine are at the outer ends of their strokes or at their inner ends, either position I shown in the usual manner on the drawing, or position II diagrammatically illustrated by solid black lines.

It should be noted that, in the first case, the stresses are transmitted wholly through oscillating lever **9**, while in the second case (where they are higher due to the fact that the volume of the combustion chamber is minimum) they are transmitted through oscillating lever 9_1, which must consequently be made, same as the corresponding connecting rods, in such manner as to be able to transmit more important stresses than said oscillating lever **9**.

According to the embodiment which has just been described, the synchronizing mechanisms are pivoted to the respective ends of rods **10** and **10'** and some portions of said mechanism move along paths which intersect the directions of said rods.

Now, it may be of advantage, in some cases, to arrange that the displacements of the synchronizing mechanisms take place wholly between rods **10** and **10'**, which permits, in particular, of pivoting them to any point of said rods.

For this purpose, and, for instance, as shown by Fig. 3, I mount on fixed axis **0** an oscillating lever **9** one of the ends of which is pivotally connected to one end of a connecting rod **11'** the other end of which is pivoted to a piece **13'** rigid with rod **10'**. The other end of said oscillating lever **9** is pivotally mounted on the middle part of an oscillating lever **16** arranged parallel to connecting rod **11'**. One of the ends of said oscillating lever **16** is pivotally connected to a piece **13** rigid with sliding rod **10**, whereas its other end is linked to piece **13'** through a connecting rod **17** parallel to oscillating lever **9** and

which is pivoted to said piece 13' about the same axis as connecting rod 11'.

I have shown at I and II the extreme positions of such a mechanism. In position I, the efforts are transmitted through oscillating lever 16 and connecting rod 17, and, in position II, they are transmitted through oscillating lever 9, connecting rod 11' and one half of oscillating lever 16.

It should be noted that, advantageously, in all the cases which have been above mentioned and when the free piston machine is fed through an injection pump, said pump should be connected to those of the elements of the synchronization mechanism the velocity of which is higher when the parts are close to the inner end of the piston stroke.

The solution above described permits of eliminating the perturbing reactions on the inside of the moving parts of the synchronizing mechanism of the machine.

In all cases, whatever be the particular embodiment that is chosen, the operation and advantages of the synchronizing device according to the invention results sufficiently clearly from the above description for making it unnecessary to enter into further explanations.

Of course, while the devices above described permit of wholly eliminating the normal reactions of the reciprocating parts of the machine, the invention also applies to the cases in which these reactions are merely considerably reduced, in particular close to the extreme outer positions of the pistons, where the inertia stresses are maximum.

In a general manner, while I have, in the above description, disclosed what I deem to be practical and efficient embodiments of the present invention, it should be well understood that I do not wish to be limited thereto as there might be changes made in the arrangement, disposition, and form of the parts without departing from the principle of the present invention as comprehended within the scope of the appended claims.

What I claim is:

1. In a machine including a frame and two parts reciprocating in opposed directions along a common longitudinal axis of movement with respect to said frame, a synchronizing device which comprises, in combination, two members, each rigid with one of said parts, located on opposite sides of said longitudinal axis and at distances therefrom, and lazy tong interconnecting means interposed between said two members, pivoted at each end to one of said members and having at least one central oscillating lever pivoted to said frame about an axis perpendicular to said longitudinal axis and intersecting it.

2. In a machine including a frame and two parts reciprocating in opposed directions along a common longitudinal axis of movement with respect to said frame, a synchronizing device which comprises, in combination, two members, each rigid with one of said parts, respectively, located on opposite sides of said longitudinal axis and at distances therefrom, respectively, and lazy tong interconnecting means interposed between said two members, pivoted at each end to one of said members and including two central levers pivoted to each other and to said frame, at their middle points, about an axis at right angles to said longitudinal axis and intersecting it.

3. In a machine including a frame and two parts reciprocating in opposed directions along a common longitudinal axis of movement with respect to said frame, a synchronizing device which comprises, in combination, two rods, slidable with respect to said frame and parallel to said longitudinal axis, each rigid with one of said reciprocating parts, located on opposite sides of said longitudinal axis and at distances therefrom, and lazy tong interconnecting means interposed between said two rods, pivoted at each end to one of said sliding rods and including at least one central oscillating lever pivoted to said frame about an axis perpendicular to said longitudinal axis and intersecting it.

4. In a machine including a frame and two parts reciprocating in opposed directions along a common longitudinal axis of movement with respect to said frame, a synchronizing device which comprises, in combination, two rods slidable with respect to said frame and parallel to said longitudinal axis each rigid with one of said reciprocating parts, located on opposite sides of said longitudinal axis and at distances therefrom, and lazy tong interconnecting means interposed between said two rods, pivoted at each end to one of said sliding rods and including at least one central oscillating lever pivoted to said frame about an axis perpendicular to said longitudinal axis and intersecting it at a point thereof located outside of the interval between said two reciprocating parts.

5. In a machine including a frame and two parts reciprocating in opposed directions along a common longitudinal axis of movement with respect to said frame, a synchronizing device which comprises, in combination, two rods slidable with respect to said frame and parallel to said longitudinal axis each rigid with one of said reciprocating parts, located on opposite sides of said longitudinal axis and at distances therefrom, respectively, and lazy tongs interconnecting means interposed between said two rods, pivoted at each end to one of said sliding rods and including at least one central oscillating lever pivoted to said frame about an axis perpendicular to said longitudinal axis and intersecting it at a point thereof located between said two reciprocating parts.

6. In a machine including a frame and two parts reciprocating in opposed directions along a common longitudinal axis of movement with respect to said frame, a synchronizing device which comprises, in combination, two rods, slidable with respect to said frame and parallel to said longitudinal axis, each rigid with one of said reciprocating parts, located on opposite sides of said longitudinal axis and at distances therefrom, respectively, and lazy tong interconnecting means interposed between said two rods, consisting of two central oscillating levers and two pairs of connecting rods pivoted to one another so as to form two deformable parallelograms having a common apex at the middle points of said oscillating levers, where they are pivoted to each other and to said frame about an axis at right angles to said longitudinal axis and intersecting it, the opposed apexes of said parallellograms, respectively, being pivoted to said rods.

7. In a machine including a frame and two parts reciprocating in opposed directions along a common longitudinal axis of movement with respect to said frame, a synchronizing device which comprises, in combination, two rods, slidable with respect to said frame and parallel to said longitudinal axis, each rigid with one of said reciprocating parts, located on opposite sides of said longitudinal axis and at distances there-

from, respectively, and lazy tong interconnecting means interposed between said two rods, consisting of two central oscillating levers and two pairs of connecting rods pivoted to one another so as to form two deformable parallellograms having a common apex at the middle points of said oscillating levers, where they are pivoted to each other and to said frame about an axis at right angles to said longitudinal axis and intersecting it at a point thereof located outside of the interval between said two reciprocating parts, the opposed apexes of said parallellograms, where said connecting rods are respectively pivoted to each other, being located on said rods.

8. In a machine including a frame and two parts reciprocating in opposed directions along a common longitudinal axis of movement with respect to said frame, a synchronizing device which comprises, in combination, two rods slidable with respect to said frame and parallel to said longitudinal axis, each rigid with one of said reciprocating parts, located on opposite sides of said longitudinal axis and at distances therefrom, respectively, and lazy tong interconnecting means interposed between said two rods, consisting of two central oscillating levers pivoted to each other and to said frame about an axis at right angles to said longitudinal axis and intersecting it, two connecting rods interposed between the ends of one of said levers, respectively, and said respective rods and parallel to the other lever, and two other connecting rods, interposed between the ends of the second lever, respectively and intermediate points of said first mentioned connecting rods, so as to be constantly parallel to the first mentioned lever.

9. In a machine including a frame and two parts reciprocating in opposed directions along a common longitudinal axis of movement with respect to said frame, a synchronizing device which comprises, in combination, two rods slidable with respect to said frame and parallel to said longitudinal axis, each rigid with one of said reciprocating parts, respectively, located on opposite sides of said longitudinal axis and at distances therefrom, respectively, and lazy tong interconnecting means interposed between said two rods, consisting of two central oscillating levers pivoted to each other and to said frame about an axis at right angles to said longitudinal axis and intersecting it at a point thereof located between said two reciprocating parts, two connecting rods interposed between the ends of said levers, respectively, and said respective rods and parallel to the other lever, and two other connecting rods, interposed between the ends of the second lever, respectively, and intermediate points of said first mentioned connecting rods, so as to be constantly parallel to the first mentioned lever.

10. In a machine including a frame and two parts reciprocating in opposed directions along a common longitudinal axis of movement with respect to said frame, a synchronizing device which comprises, in combination, two rods, slidable with respect to said frame and parallel to said longitudinal axis, each rigid with one of said reciprocating parts, located on opposite sides of said longitudinal axis and at distances therefrom, respectively, and interconnecting lever means interposed between said two rods, including an oscillating lever pivoted to said frame about an axis perpendicular to said longitudinal axis and intersecting it, a second lever pivoted at its middle point to one end of said first mentioned lever and at one of its ends to one of said sliding rods, a connecting rod interposed between the other end of said first mentioned lever and the other sliding rod and parallel to said second mentioned lever, and a connecting rod pivoted at one end to said first mentioned connecting rod about the axis of oscillation thereof with respect to said second mentioned sliding rod and at the other end to the second end of said second mentioned lever, said second mentioned connecting rod being parallel to said first mentioned lever.

11. In a machine including a frame and two parts reciprocating in opposed directions along a common longitudinal axis of movement with respect to said frame, a synchronizing device which comprises, in combination, two members, each rigid with one of said parts, located on opposite sides of said longitudinal axis and at distances therefrom, and interconnecting lever means interposed between said two members, pivoted at each end to one of said members and having at least one central oscillating lever pivoted to said frame about an axis perpendicular to said longitudinal axis and intersecting it.

12. In a machine including a frame and two parts reciprocating in opposed directions along a common longitudinal axis of movement with respect to said frame, a synchronizing device which comprises, in combination, two rods, slidable with respect to said frame and parallel to said longitudinal axis, each rigid with one of said reciprocating parts, located on opposite sides of said longitudinal axis and at distances therefrom, and interconnecting lever means interposed between said two rods, pivoted at each end to one of said sliding rods and including at least one central oscillating lever pivoted to said frame about an axis perpendicular to said longitudinal axis and intersecting it.

13. In a machine including a frame and two parts reciprocating in opposed directions along a common longitudinal axis of movement with respect to said frame, a synchronizing device which comprises, in combination, two rods, slidable with respect to said frame and parallel to said longitudinal axis, each rigid with one of said reciprocating parts, located on opposite sides of said longitudinal axis and at distances therefrom, interconnecting lever means interposed between said two rods, pivoted at each end to one of said sliding rods and including at least one central oscillating lever pivoted to said frame about an axis perpendicular to said longitudinal axis and intersecting it, and links pivoted to said rods and to opposite ends of said lever.

RAUL PATERAS PESCARA.