Nov. 1, 1938. T. KELLEWEAY 2,134,921

PROPELLER

Filed Oct. 7, 1937

Fig. 3.

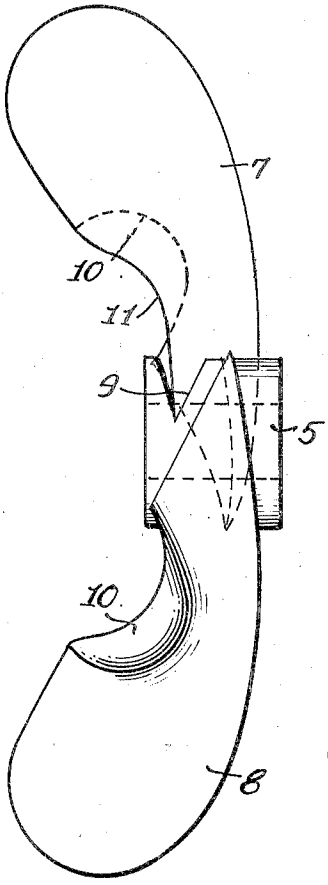

Fig. 1.

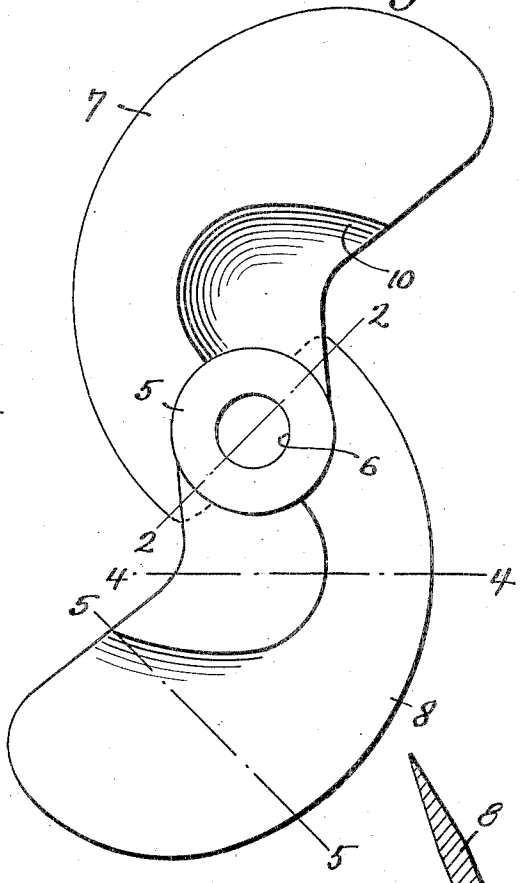

Fig. 2.

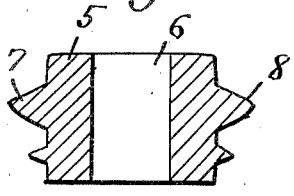

Fig. 5.

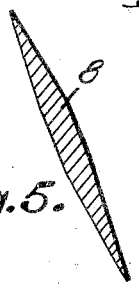

Fig. 4.

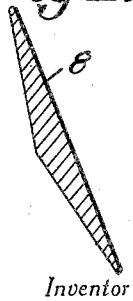

Inventor

Theodore Kelleweay

By Clarence A. O'Brien

Hyman Berman

Attorneys

Patented Nov. 1, 1938

2,134,921

UNITED STATES PATENT OFFICE

2,134,921

PROPELLER

Theodore Kelleweay, Yonkers, N. Y.

Application October 7, 1937, Serial No. 167,815

1 Claim. (Cl. 170—159)

This invention relates to new and useful improvements in propellers for turbines and various other uses.

The principal object of the present invention is to provide a propeller constructed in such a manner as to increase bearing surface, while at the same time diminishing resistance and eliminating churning action.

Another important object of the invention is to provide a propeller wherein the edge portions of the propeller blades are constructed in such a manner as to eliminate resistance and churn.

Other important objects and advantages of the invention will become apparent to the reader of the following specification.

In the drawing:

Figure 1 represents a rear elevational view of the propeller.

Figure 2 is a sectional view on line 2—2 of Figure 1.

Figure 3 is a side elevational view of the propeller.

Figure 4 is a cross-section on line 4—4 of Figure 1.

Figure 5 is a cross section on the line 5—5 of Figure 1.

Referring to the drawing, wherein like numerals designate like parts, it can be seen that numeral 5 denotes the hub having the drive shaft bore 6 therethrough.

The propeller is of the screw type and while shown with the blades 7—8, may have three, four, five, or more blades.

As is clearly shown in Figures 4 and 5, which are cross-sectional views of the blades, the blades are of arcuate shape, curving rearwardly. The blades are thickened along their intermediate longitudinal portions, and gradually change from being convex on both sides at their outer ends to being flat on their inner sides and convex on their outer sides.

The inner ends of the blades 7—8 individually extend from the hub 5 and have the spaces 9 between the same. Both blades curve in a rearward direction and each on its rearward side is provided with the dished formation 10 merging with the cut out portions 11 in the tail edge of the blade. This dishing out and recessing of the blades serves to increase the bearing surface of the propeller, while at the same time diminishing resistance and eliminating hub vacuum and churn. Furthermore, as is suggested in Figures 4 and 5, the leading edges of the blades are sharp so as to readily cut through the water.

While the foregoing specification sets forth the invention in specific terms, it is to be understood that numerous changes in the shape, size, and materials may be resorted to without departing from the spirit and scope of the invention as claimed hereinafter.

Having thus described the invention, what is claimed as new is:

A propeller comprising a hub, a plurality of blades radiating from the hub, each of said blades being provided with an arcuate-shaped leading edge and a trailing edge, said trailing edge being provided with an inward extension joining the hub on a line tangentially with respect thereto, each of the said blades being provided with a concavity on one side thereof adjacent the trailing edge of the blade at a point adjacent the hub and taking in that portion of the trailing edge from where the lateral portion extends.

THEODORE KELLEWEAY.