(12) INTERNATIONAL APPLICATION PUBLISHED UNDER THE PATENT COOPERATION TREATY (PCT)

(19) World Intellectual Property Organization
International Bureau

(43) International Publication Date
5 March 2015 (05.03.2015)

WIPO | PCT

(10) International Publication Number
WO 2015/028245 A1

(51) International Patent Classification:
D06F 39/14 (2006.01) *D06F 58/04* (2006.01)

(21) International Application Number:
PCT/EP2014/066482

(22) International Filing Date:
31 July 2014 (31.07.2014)

(25) Filing Language: English

(26) Publication Language: English

(30) Priority Data:
13182517.6 30 August 2013 (30.08.2013) EP

(71) Applicant: **ELECTROLUX APPLIANCES AKTIEBOLAG** [SE/SE]; S:t Goransgatan 143, S-10545 Stockholm (SE).

(72) Inventors: **SANTAROSSA, Marco**; Electrolux Italia S.p.A., Corso Lino Zanussi 30, I-33080 Porcia (PN) (IT). **PILLOT, Sergio**; Electrolux Italia S.p.A., Corso Lino Zanussi 30, I-33080 Porcia (PN) (IT).

(74) Agents: **PETRUCCELLI, Davide** et al.; Electrolux Italia S.p.A., Corso Lino Zanussi 30, I-33080 Porcia (PN) (IT).

(81) Designated States *(unless otherwise indicated, for every kind of national protection available)*: AE, AG, AL, AM, AO, AT, AU, AZ, BA, BB, BG, BH, BN, BR, BW, BY, BZ, CA, CH, CL, CN, CO, CR, CU, CZ, DE, DK, DM, DO, DZ, EC, EE, EG, ES, FI, GB, GD, GE, GH, GM, GT, HN, HR, HU, ID, IL, IN, IR, IS, JP, KE, KG, KN, KP, KR, KZ, LA, LC, LK, LR, LS, LT, LU, LY, MA, MD, ME, MG, MK, MN, MW, MX, MY, MZ, NA, NG, NI, NO, NZ, OM, PA, PE, PG, PH, PL, PT, QA, RO, RS, RU, RW, SA, SC, SD, SE, SG, SK, SL, SM, ST, SV, SY, TH, TJ, TM, TN, TR, TT, TZ, UA, UG, US, UZ, VC, VN, ZA, ZM, ZW.

(84) Designated States *(unless otherwise indicated, for every kind of regional protection available)*: ARIPO (BW, GH, GM, KE, LR, LS, MW, MZ, NA, RW, SD, SL, SZ, TZ, UG, ZM, ZW), Eurasian (AM, AZ, BY, KG, KZ, RU, TJ, TM), European (AL, AT, BE, BG, CH, CY, CZ, DE, DK, EE, ES, FI, FR, GB, GR, HR, HU, IE, IS, IT, LT, LU, LV, MC, MK, MT, NL, NO, PL, PT, RO, RS, SE, SI, SK, SM, TR), OAPI (BF, BJ, CF, CG, CI, CM, GA, GN, GQ, GW, KM, ML, MR, NE, SN, TD, TG).

Published:

— *with international search report (Art. 21(3))*

(54) Title: DOOR ASSEMBLY FOR A LAUNDRY TREATMENT DEVICE

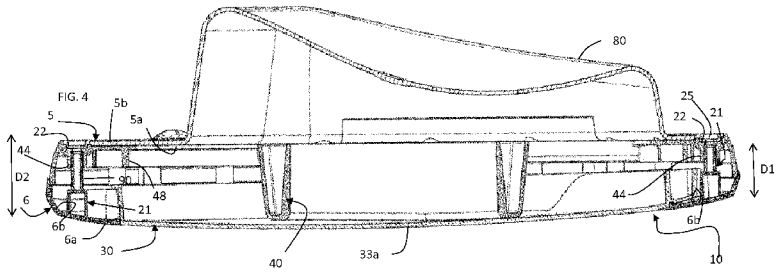

(57) Abstract: The present invention relates to a door assembly (10;110) for a laundry treatment device (1,100), apt to open or close an opening (4; 104) defined in said laundry treatment device, said door assembly comprising a frame (5,6;105,106), said frame including: o A front door frame (6;106) forming a front surface (6a;106a) of the door assembly, said front surface defining a front plane (PA), said front door frame (6;106) comprising a plurality of coupling elements (21;121) for the coupling to a rear door frame; and o The rear door frame (5;105) forming a rear surface (5b; 105b) of said door assembly, said rear surface defining a closure plane (PB) apt to abut against the opening formed in said laundry treatment device, said rear door frame (5;105) including a plurality of coupling counter-elements (22;122) engaging with said coupling elements (21;121) of said front door frame; o Wherein said coupling elements (21;121) extend from a rear surface (6b;106b) of said front door frame opposite to said front surface and/or said coupling counter-elements (22;122) extend from a front surface (5a;105a) of said rear door frame opposite to said rear surface; and o Wherein a first height (D1) of a first one of said coupling elements from said rear surface (6b;106b) of said front door frame (6; 106) is higher than a second height (D2) of a second one of said coupling elements (21;121) from said rear surface of said front door frame, or a first height (D1) of a first one of said coupling counter-elements (22;122) from said front surface (5a;105a) of said rear door frame (5; 105) is higher than a second height (D2) of a second one of said coupling counter-elements from said front surface of said rear door frame, so that said front plane (PA) and said closure plane (PB) are intersecting one the other forming an angle different from 0° and 180°.

WO 2015/028245 A1

Door assembly for a laundry treatment device

Field of the invention

The present invention relates to a door assembly for a laundry treatment device, in particular for a washing machine, a dryer or a washer/dryer, i.e., a washing machine having also dryer functions. The door assembly is so construed to have an appealing aesthetic appearance and to minimize the number and type of parts associated with manufacturing and installing such door assembly in different devices.

Background of the invention

Conventionally, laundry treatment devices include a casing within which a laundry treatment chamber, such as a drum, is located. In the casing, more in particular in a front wall of the same, an opening is formed, to allow the user to accede to the treatment chamber in order to load or unload the laundry before and after the washing and/or drying cycle(s). A door assembly, also called porthole, is rotatably fixed, for example hinged, to the casing and it is apt to open and close the mentioned opening.

In order to avoid accidental burns of the user during high temperature cycles caused by the user's contact with a hot surface present in the laundry treatment device, the door assembly generally includes a door glass and a door cover separated by a gap, so as to form an air spacing which avoids overheating of the door cover which can be touched by the user. Alternatively, instead of a door glass, a plastic element is used, in particular in dryers where the temperatures reached are not extremely high.

However, it is also known that the aesthetic appearance of the laundry treatment device is important and represents a characteristic that might determine the device's choice by the user. Among the preferred aesthetic characteristics, a smooth, even and glossy door assembly is particularly important. In order to improve the aesthetic appearance of the door assembly, in the prior art it is known to provide the door assembly with a cover ring element, generally shaped as a ring, for protecting and/or decorating the door assembly and hiding joints or connecting elements. Moreover, alternatively or in addition, it is particularly desired that the door outer surface follows substantially the outer surface of the front wall where it is hinged, in other words that the door does not, or only to a minor extent, protrude or stick out or is recessed from the wall where it is attached to.

"Curved" or tilted front walls are increasingly popular in known laundry treatment devices. In these devices, the front wall is not completely flat, but it presents a finite radius of curvature, e.g., it has a roundish shape. This means that the front wall presents at least a portion which is inclined with respect a vertical plane. In this non-flat front wall, to obtain a substantially uniform surface, without edges of the door visibly protruding or being recessed from the same, becomes rather cumbersome.

A possible known solution is to incline the door itself, so that the axis of rotation of the door is also inclined with respect of a vertical plane. This is shown for example in EP 1466047 where a washing machine and dryer are disclosed, in which a user can watch the inside thereof, and a user can put the laundry into the inside thereof, and draw out the same. The washing machine includes a cabinet having an opening at the front thereof; a tub provided inside the cabinet for storing washing water; a drum being rotatably provided to a spinning shaft by a motor inside the tub; and a door provided at the opening for being tilted to the inside of the washing machine. The dryer has the same structure as the washing machine.

The number and type of parts, steps, time and costs associated with manufacturing and installing a prior art door on a washing machine can be much different from those of a dryer's door, which may affect the efficiency, cost and time of manufacturing a washing machine or a dryer. Moreover different manufacturing lines or stations may be needed to manufacture a washing machine compared to a dryer's door, which again may affect the efficiency, cost and time of manufacturing of the laundry treatment device.

In addition, when a reversible door assembly is considered in a curved or tilted front wall, a good "matching" between the outer surface of the front wall and the outer surface of the door assembly becomes even more critical. The reversibility indeed requires that the door assembly fits into the front wall in two configurations separated by a 180° rotation, which imposes even more constraints onto the door assembly itself, so that the appliance can still achieve an acceptable aesthetical appearance in both configurations.

This problem has for example being considered in WO 2011/012593. In this application, a household appliance is described, which includes a housing having an opening for accessing an interior of the housing, a tub disposed inside the housing and having a rotating drum therein for receiving laundry through the opening, and a door assembly having a see-through portion for viewing into the tub and being pivotably coupled to the housing and movable between an open position and a closed position. The door assembly

includes a door frame and a front ring coupled directly or indirectly to the door frame. The front ring includes a front face having an outside and inside edge, the inside edge defining an opening that substantially corresponds to the see-through portion, and a recessed rear face on an opposite side of the front ring from the front face, wherein the recessed rear face includes a handle portion extending around at least a portion of the front ring.

Summary of the invention

The present invention relates to a door assembly for a laundry treatment device, wherein with "laundry treatment device" a washing machine, a laundry dryer or a combined washer/dryer machine is indicated.

Applicants have considered the washing machine and dryer of EP 1466047.

The above mentioned prior art washing machine comprises a casing in which an aperture is built to accede to a treatment chamber in which the laundry is located in order to be washed. Additionally, the washing machine includes a door assembly capable of closing and opening, when needed, such an aperture formed in the casing. The door assembly is tilted with respect to the vertical direction. In this machine, also the opening in the casing has to be tilted. In the disclosed embodiments, also the drum and the tub are tilted with respect to a horizontal axis. Indeed, the door should close an opening formed on the same plane (or in a parallel plane) in which the surface abutting on the opening is formed, in order to have an efficient laundry treatment.

Applicants have realized that the front wall of the machine of EP 1466047 is still vertical, while the door is tilted. A relatively wide and deep recess is thus formed in the topmost portion of the front wall, which can be aesthetically not pleasant. In other words, there is no matching between the front wall and the door's surface, on the contrary the two are misaligned.

It is an object of the present invention to provide a door assembly for a laundry treatment device which can be assembled in an easy and reliable manner.

Another object of the invention is to provide a door assembly for a laundry treatment device which does not impose further constraints on the laundry treatment device itself, so that most of the standard elements and components can be used.

Another object is to provide a door assembly which can be used in different types of laundry treatment devices with minor changes.

Additionally, a further object is to provide a laundry treatment device the aesthetic appearance of which is improved. Moreover, the surface of the door assembly and the surface of the front wall are better "matching" than in the prior art.

Applicants have realized that, in order to obtain the above mentioned objects of the invention, a door assembly defining different planes, angled one with respect to the other, is to be used. Preferably, a first plane is the plane in which the closure of the opening in the casing is formed and a second plane is a plane following substantially the contour of an outer surface of the laundry treatment device.

In order to obtain the different planes one tilted with respect to the other, and at the same time avoiding to introduce additional elements in the assembly, Applicants have used the already present coupling elements to couple a front door frame to a rear door frame of the door assembly and changed their construction and design.

In addition, the aforementioned invention applies not only to washing machines, but also to dryers and to combined washer/dryers without substantially modifications, being the construction of the door assembly substantially similar in all the named appliances.

A first object of the present invention relates to a door assembly for a laundry treatment device apt to open or close an opening defined in said laundry treatment device, said door assembly comprising a frame, said frame including:

- a front door frame forming a front surface of the door assembly, said front surface defining a front plane, said front door frame comprising a plurality of coupling elements for the coupling to a rear door frame; and
- the rear door frame forming a rear surface of said door assembly, said rear surface defining a closure plane apt to abut against the opening formed in said laundry treatment device, said rear door frame including a plurality of coupling counter-elements engaging with said coupling elements of said front door frame;
- wherein said coupling elements extend from a rear surface of said front door frame opposite to said front surface and/or said coupling counter-elements

extend from a front surface of said rear door frame opposite to said rear surface; and

- wherein a first height of a first one of said coupling elements from said rear surface of said front door frame is higher than a second height of a second one of said coupling elements from said rear surface of said front door frame, or a first height of a first one of said coupling counter-elements from said front surface of said rear door frame is higher than a second height of a second one of said coupling counter-elements from said front surface of said rear door frame, so that said front plane and said closure plane are intersecting one the other forming an angle different from 0° and 180°.

The door of the invention is apt to be coupled to a laundry treatment device having an opening. The door assembly, when connected to the laundry treatment device, can be moved, preferably oscillated, from an open configuration or position, which is the configuration in which the door assembly is detached from the opening and the treatment chamber of the device is accessible, and a closed configuration or position, which is the configuration in which the door assembly closes the opening.

The door assembly of the invention includes a frame divided in two portions, a front frame and a rear frame.

Preferably, but not necessarily, the frame has an aperture, general centrally located. The aperture is closed, for example by a transparent element so that the status of the laundry can be checked. However, the closure can be made of a non-transparent element as well.

The rear door frame is the portion that abuts against the opening formed in a front wall of the laundry treatment device. Generally, but not necessarily, the rear door frame is not visible from the outside when the door assembly is in a closed operative configuration.

The rear door frame includes a rear surface, which is the one that preferably faces the opening in the casing, when the door assembly is in a closed configuration. The rear surface defines a plane which is called closure plane, due to its function of “closing” the laundry treatment device when the door assembly is in a closed operative position. It is to be understood that not all the rear surface has to lie on the same closure plane; moreover it does not even mean that the majority of the rear surface lies on the same closure plane. The closure plane is the plane defined by a portion of the rear surface which abuts on the

casing, or front wall, of the laundry treatment device. In other words, the closure plane is defined by the surface which is in contact to the laundry treatment device (e.g., to any portion thereof), when the door assembly is in a closed configuration, such as for example a closure bellow.

In addition, the rear door frame includes also a surface opposite to the rear surface and facing the front door frame, called front surface of the rear door frame.

For example, the rear door frame has a ring shape. The ring defines a first and a second opposite surfaces. One of the two surfaces is the rear surface in contact with the casing, e.g., with the front wall of the laundry treatment device, while the opposite second surface, the front surface, is facing the front door frame for connection thereof.

The front door frame is the portion of frame that represents the most visible part of the door assembly and one of its surfaces, called front surface of the front door frame, defines the outer surface of the door assembly.

Therefore, the aesthetic appearance of the door assembly is mainly given by the shape and finishing of the front frame.

According to the invention, the front surface of the front door frame defines a plane which is not parallel to the plane defined by the rear surface of the rear frame; on the contrary the two planes form an angle therebetween.

The front door frame includes, in addition to the front surface, also a rear surface. The rear surface faces the front surface of the rear door frame when the door assembly is in an assembled configuration.

The front frame plane, which is a maximal area front plane, is defined as follows. Taken a “virtual” plane, it is put into contact with the front surface of the front door frame. The location where the plane is “stable” on the front frame, i.e., where it contacts the front surface in at least three different points, defines the location of a candidate front plane.

Also planes that section a portion of the front surface can be considered as candidate front planes. However, no point belonging to the surface of the sectioned portion of the front frame can be considered as generating one of the three points of front surface to which the candidate front plane is in contact. In other words, the “cut”, i.e., sectioned part, of the front frame does not form a locating point for the candidate front frame. The three points

defining the candidate front plane have all to belong to the “uncut”, i.e., unsectioned, front surface.

In case there is a single location in which the plane is stable, this single location defines the location of the front plane, i.e., the single candidate front plane is the front plane. Otherwise, a plurality of such locations, and thus a plurality of candidate front planes, can be present.

The candidate front plane defining the largest area on the front surface is the front plane (thus the maximal area front plane). The largest area is calculated as follows.

In a first possible case, all candidate front planes, when in contact to the front surface of the front frame, define on the front surface at least a closed curve (or even an area, in case a candidate front plane is in contact with a planar portion of the front surface). Each closed curve encircles an area (or, as mentioned, the area is directly defined): the candidate front plane which forms the largest of these areas is the front plane. The area may include a portion of front surface, but it may also include portion(s) not belonging to the front surface.

In case a candidate front plane which sections a portion of the front frame is present, the sectioned portion of the front frame cannot be considered as part of the closed curve. In addition, the sectioned portion has to be internal to the closed curve, with an unsectioned portion of front surface present therebetween, i.e., the sectioned portion and the closed curve are not in contact to each other.

Otherwise, there is (are) candidate front plane(s) which, when in contact with the front surface, do not form a closed curve. The front surface might include only such candidate front planes, or a combination of candidate front planes forming closed curves (and/or area(s)) and candidate front planes not forming such closed curves. For each of those candidate front planes which do not form a closed curve, the points of contact between the candidate front plane and the front surface are first established and then connected via segments and a closed curve is in this way then formed. Again, as above, the largest area encircled by these closed curves (among both the “manually” formed closed curves and the closed curves defined by the candidate front planes themselves) selects the front plane.

Also in this case, when a candidate front plane is sectioning a portion of the front frame, the sectioned portion has to be internal to the "manually formed" closed curve, with an unsectioned surface present therebetween, i.e., the sectioned portion and the "manually formed" closed curve are not in contact to each other.

In practice, the front plane is defined either by the most extended flat portion of front surface, or by the most extended "virtual flat portion" defined by a plane tangent to the front surface. In addition, the front plane can also be a sectioning plane, however in this case the sectioned part can only be substantially "centrally located" with respect to the front frame surface, otherwise it cannot be encircled by the closed curve defined above.

Moreover, considering a normal to the closure plane and a normal to the front plane, a non-zero angle is formed between the two.

In this way, according to the layout of the invention, the rear door frame can effectively close the opening to access the drum, e.g., the rear surface of rear door frame abuts against the opening in the casing and thus it is adaptable to close drums in casing formed according to the prior art, without the need of changing any component of the laundry treatment device. In addition, the rear door frame could be used for assembling a door usable in many different laundry treatment devices, such as washing and/or drying dryer, as better detailed below. The closure plane could be selected for example as the vertical plane, however also a tilted closure plane is envisaged as well, in case of laundry treatment devices having a tilted opening (i.e., an opening defining a tilted plane with respect to a vertical plane).

The front surface of the front door frame, when the door assembly is in a closed configuration on the front wall, preferably follows the contour of the front surface of the front wall of the laundry treatment device, in particular preferably when the latter is also inclined, in order not to protrude or be recessed excessively from the same so as to create a uniform continuous appearance of the front wall.

The front and rear door frame can have any shape, for example they can have an oval, circular or rectangular cross section. Preferably they have a substantially ring-shaped design.

In addition, the front surface of the front door frame, could be colored, textured, smooth or wrapped in metal, an additional cover ring could be placed on top of it, etc., in order to improve the aesthetical appearance of the overall laundry treatment device.

The internal aperture of door frame, when present, can also have any shape, preferably matching the shape of the frame itself (e.g., in a circular frame, a circular aperture is formed). The internal aperture may include a front aperture in the front door frame and a rear aperture in the rear door frame, or only one of the two. The aperture in the frame could be centered with the frame itself, e.g., it could be concentric in case of a ring-shaped door or it could be off-center, e.g., the center of the aperture is offset from a center of the frame.

It is to be understood that several other elements can be fastened or attached to the front and/or rear door frame. For example, a closure element could be fastened or even formed integral to the front and/or the rear door frame, thus closing the rear and/or front aperture. However, the rear surface of the rear door frame can always be defined as the surface that enters into abutment with the opening of the laundry treatment device and the front surface as the surface covering most of the front frame, or along which most of the front frame aligns, or on which a plane is tangent in at least three points and forms the widest “virtual area”.

Preferably, front door frame and/or rear door frame are made of a plastic material. Preferably, each of them is molded as a single piece of plastic.

According to the invention, in order to obtain two different planes forming an angle therebetween different from 0° and 180° (i.e., not parallel one to the other), the coupling elements used to couple the front door frame to the rear door frame (and vice-versa) are used. The front door frame includes a plurality of coupling elements for the coupling to said rear door frame, while the rear door frame includes a plurality of coupling counter-elements engaging with said coupling elements of said front frame.

In order to couple the front door frame to the rear door frame, many different coupling elements and coupling counter-elements could be used. For example, the coupling elements could be screws and the counter-elements could be appropriate receptacles with a corresponding screw thread. Other coupling elements could include bolts, plastic fasteners or the like, rivet coupling, etc. The counter-coupling elements could be the receptacles or seats to fasten with the corresponding coupling elements.

The coupling elements and/or the coupling counter-elements are so construed that they extend from the rear surface of the front door frame and/or from the front surface of the rear door frame toward the other of said front door frame and/or rear door frame (e.g., they have an end fixed onto one of the front and rear frame and protrude toward the other of the front or rear frame). In order to obtain the tilt, the height of these elements is not constant. According to the invention, a first height of a first one of said coupling elements from said rear surface of front door frame is higher than a second height of a second one of said coupling elements from said rear surface of front door frame. Alternatively, or in addition, a first height of a first one of said coupling counter-elements from said front surface of rear door frame is higher than a second height of a second one of said coupling counter-elements from said front surface of rear door frame.

By realizing coupling elements and/or counter-elements having different heights, a slope can be formed when the front and rear door frame are coupled together.

The height variation between the highest coupling element and the lowest one, or between the highest coupling counter-element and the lowest one, i.e., the difference between the two heights of the elements/counter elements, is preferably comprised between 5 mm and 20 mm. The same range of height variation is preferably found in the door frame between the thickest edge portion and the thinnest edge portion.

The height is calculated starting from the surface from which the elements or counter-elements having a variable height protrude, e.g., from the surface to which they are attached with one of their opposite ends. For example, the elements can have a variable height and this height is calculated starting from the rear surface of the front door frame along a perpendicular axis to such a surface, till the end of the element is reached. Alternatively, the counter-elements can have a variable height and this height is calculated perpendicularly to the front surface of the rear door frame.

The achieved tilt of one of the door surfaces with respect to the other(s) is a function of the difference in height among the coupling elements or the coupling counter-elements.

Preferably, either only the coupling elements or the coupling counter-elements are obtained with a variable height, so that the other of the elements/counter elements all have the same height.

Advantageously, said frame defines an outer perimeter edge, said outer perimeter edge having a first outer perimeter edge portion and a second outer perimeter edge portion opposite to the first outer perimeter edge portion with respect to an axis of said frame, and said frame has a first thickness at said first edge portion and a second thickness at said second edge portion, the first thickness being different than the second thickness.

Due to the fact that the frame is “sandwiched” between two surfaces angled one with respect to the other, it has consequently different thicknesses along its outer edge. For example, in case of a ring-shaped frame, the rim is thicker on one side than on the opposite side. Of course, there can also be a position, or more than one, in which one side and the opposite side of the outer edge of the frame with respect to an axis have the same thickness.

The axis could be a horizontal axis passing through a geometrical center of the door assembly, when seen in a front view, so that the first and second outer perimeter edge portions are a topmost and lowermost portion of the door edge with respect to a vertical axis, in a configuration in which said door assembly is coupled to a laundry treatment device.

Preferably, the thickness of the frame varies continuously and/or gradually from a maximum thickness to a minimum thickness along the outer perimeter edge.

In a preferred form of realization, said coupling elements and/or coupling counter-elements include appendices departing from said rear and/or front surface of said front and/or rear door frame, respectively.

The appendices can have any form and shape, i.e., the appendices might include a tubular element having a circular, oval, polygonal cross-section; an integral flap for a snap fitting connection; a hook engaging into a corresponding seat, etc.

Said appendices can be formed integral with the front and/or rear door frame or as separated pieces fastened to the front and/or rear door frame. The configuration and shape of the coupling elements is generally completely different from the configuration of the corresponding coupling counter-elements, for example as in the case of a hook as a coupling element and a seat as a counter-element. However similar shapes are encompassed as well by the present invention.

Preferably, said coupling elements and/or coupling counter-elements are arranged around said front and/or rear door frame angularly spaced one from the other.

In order to have a stable connection between the front and rear door frame, it is preferred that the coupling elements and coupling counter-elements are distributed around the frame.More preferably, the height of said coupling elements and/or coupling counter-elements gradually change moving from one coupling elements and/or coupling counter-elements to an angularly adjacent one.

The change in the height is preferably smooth, so that there are elements or counter elements having many different heights, a maximum height, a minimum height, and the heights in between. In this way, the outer appearance of the door frame is also improved.

More preferably, said coupling elements and/or coupling counter-elements are arranged around an outer edge of said door frame.

Preferably, the elements and/or counter-elements follow the outer perimeter of the frame to firmly couple the front to the rear door frame.

In a preferred embodiment, one of said coupling elements and/or one of said coupling counter-elements includes a tubular sleeve.

Preferably, a coupling element is inserted in a corresponding coupling counter-element, or vice versa.

A possible coupling between elements and counter-elements is for example via interference. Other elements could be added as well in the coupling process of the front door frame to the rear door frame, for example screws inserted by means of through-holes formed in the rear door frame or front door frame could be screwed inside the elements and/or counter-elements as an extra fastening. For example, in case of the tubular-shaped elements and/or counter elements, in the inner surface of the tubular sleeves, a thread can be formed to allow an easy screwing of a screw that firmly holds each couple of coupling element and corresponding coupling counter-element together.

In a preferred embodiment, the door assembly includes a handle and a handle-carrying element interposed between said rear door frame and front door frame, said handle being carried said handle-carrying element, said handle-carrying element being apt to be

mounted in said door assembly in a plurality of alternative positions, so that said handle can be positioned along said frame at different locations.

Preferably, the handle is not attached directly to the front or rear door frame, but it connected to a handle-carrying element. In this way, by changing the position of the handle-carrying element which is sandwiched between the front and the rear frame, different configurations of the handle could be achieved so that the handle could be positioned in the location most comfortable for the user to grasp, depending on the positioning of the laundry treatment device.

Preferably, door assembly of the invention is a reversible door assembly, i.e., it can be mounted in a right-hand door configuration or in a left-hand door configuration.

The handle can have any shape and can also include a recess in which a hand or fingers may be introduced in order to pull out the door assembly. Alternatively, the handle includes a flap protruding from the front frame.

A repositioning of the handle can be desirable mainly for two reasons: either to reverse the door's opening direction, or to change the location of the handle from an "upper" location to a "lower" location, or vice-versa, for example when the position in space of the appliance is changed.

In case a change from a left-hand door to a right-hand door is required in a laundry treatment device, a substantially mirror image of the handle about a vertical axis of the door assembly is preferred. The new location of the handle is a reflection across the vertical axis of the door assembly of the old location of the handle. The vertical axis of the door assembly is an axis parallel to the Z axis defined by the laundry treatment device and passing through the geometrical center, or vertical median, of the door assembly. Defining a standard frame of reference using the vertical axis of the door assembly and a horizontal center-line of the door frame, which is a horizontal axis also passing through the geometrical center, or horizontal median, of the door assembly, four different quarters of the door assembly remains defined as well. For example, if the location of the handle in a right-hand door was in the upper-left quarter, then in the reversed door it is preferably in the upper-right quarter.

Alternatively, if only the location of the device changes, e.g., from a floor-positioned laundry treatment device to a laundry treatment device mounted on top of another one,

and the door assembly is still to be opened on the same side, then preferably the two handle locations are substantially one the mirror image of the other about the horizontal center-line of the door frame.

Preferably, when assembled, the handle is fixed, e.g., it does not operate any mechanism to fasten or unfasten the door. The locking mechanism of the door is preferably of the pull-to-open type , in other words the door is opened pulling the handle: when the pulling force exceeds a certain threshold, a hook or similar present in the door frame disengages from a corresponding seat on the casing in a known manner, via a release mechanism. The handle therefore, during the pulling, does not perform any movement relative to the door frame.

In this embodiment, preferably, said coupling elements and/or coupling counter elements are so construed to function as anti-rotational elements for said handle-carrying element when said door assembly is assembled.

The handle can be positioned in different locations along the frame, however it is desirable that, after having fixed the handle in the desired location, the latter remains in a stable manner in such location. For this purpose, preferably additional rotations of the handle-carrying elements are avoided. The coupling elements and/or counter-elements could also function as anti-rotational elements. For example, on the handle-carrying element through-holes or notches in which the element or counter-element are housed can be formed. Rotations of the handle-carrying element are thus avoided by the presence of the elements or counter-elements blocking all its possible movements around an axis.

The door assembly, in an advantageous embodiment, includes a cap element located between said front door frame and said rear door frame, and said front and/or rear door frame further includes a front and or rear aperture, and said cap element covers at least partially said aperture.

In certain laundry treatment devices, for example in washing machines, it is preferred to have an element that prevents any contact between a user and a door glass sandwiched between the front and rear frame. A door glass is positioned between the front and rear frame because the temperature of the water inside the machine can be relatively very high and thus damage plastic elements. In addition, it is preferred by users to have a transparent window so that laundry during the treatment processes and cycles could be checked. In this embodiment, the door glass is also covered by the cap element. It is to be

understood that in case of dryers or other laundry treatment devices, the cap could also cover a different element than a door glass.

In the present description and in the attached claims, "glass" has to be read as a protective element supported by the one or more frames of the door assembly and having the function, together with the rest of the porthole, of tightly closing the processing chamber of the machine; therefore the glass may be actually made of glass, but also of different material (e.g., plastic material), and it may be transparent, opaque, or partially transparent.

Preferably, the cap element has a similar outer edge shape to the outer edge shape of the frame, so that it can be easily sandwiched between the front frame and the rear frame. Thus it can be circular, oval, rectangular, etc.

Preferably the cap element is made of plastic material. Advantageously, it is made of a transparent material.

In this embodiment, preferably, said cap element defines a first surface facing said rear door frame or front door frame, said first surface being substantially parallel to said closure plane, and a second surface, opposite to the first surface and facing the other of said front door frame or rear door frame, said second surface defining a plane which is intersecting said closure plane so as to form an angle different from 0° and 180°.

The cap element could be used, in addition to the coupling elements and/or counter elements having different heights, to form the tilted plane in correspondence to the front door frame. The cap element defines a first and a second surface, which are the facing the front and the rear door frame, respectively, or vice-versa. The first and the second surfaces of the cap element are angled one with respect to the other.

The first and the second surfaces are defined as those surfaces which are in contact with either the front or the rear door frame or any element therebetween, e.g., the first and second surfaces are in abutment with the front or rear door frame, or any element interposed therebetween, although the cap element might include also other surfaces.

Alternatively, in a different embodiment, cap element can be used to strengthen the frame structure.

Advantageously, said cap element includes through-holes or notches for housing said coupling elements and/or coupling counter-elements.

The coupling elements and/or counter-elements could also function as anti-rotational elements for the cap element and/or the handle-carrying element. For example, on the cap element and/or on the handle-carrying element through-holes or notches in which the elements or counter-elements are housed can be formed. Rotations of the cap element and/or of the handle-carrying element are thus avoided by the presence of the elements or counter-elements blocking all possible movements around an axis.

Advantageously, a pair of coupling elements and/or a pair of coupling counter-elements is located substantially at two opposite ends of said handle for each possible handle location in an assembled configuration of said door assembly.

In this way, preferably the frame is particularly strengthened close to the handle locations, where a pressure is commonly exerted by the user pulling the door assembly.

In a preferred configuration, said front door frame includes a front door aperture and a cover ring having a cover ring opening, said cover ring being attached to said front door frame in such a way that said cover ring opening substantially corresponds to said front door aperture, said cover ring including said plurality of coupling elements for the coupling to said rear door frame.

Cover rings are used to improve the aesthetical appearance of the laundry treatment device. Thus, the front door frame of the door assembly of the invention is provided with a cover ring element, generally shaped as a ring, for protecting and/or decorating the door assembly and hiding joints or connecting elements. In addition, it can also be the carrier of the coupling elements.

According to a second aspect, the invention relates to a laundry treatment device comprising:

- A casing containing a treatment chamber for receiving load to be treated,
- A front wall covering a side of said casing, said front wall including an opening for accessing said treatment chamber;
- A door assembly associated to said casing for opening and closing said opening, said door assembly being made according to the first aspect.

The laundry treatment device comprising the door assembly of the invention has an opening to access the treatment chamber in which the laundry is treated which is opened and closed via the door assembly.

Preferably, said laundry treatment device is a washing and/or a drying machine. Preferably, it is a front loading laundry treatment device.

In front loading laundry treatment devices, the door assembly is hinged to a front wall in order to open and close the opening which is substantially vertical (or slightly tilted with respect to the vertical direction).

Commonly, front loading laundry treatment device includes a casing which encloses an inner compartment comprising the laundry treatment chamber, for example a rotating drum for housing the laundry to be treated and a tub encasing the drum. The laundry within the drum is moved by means of the rotation of the drum and by the action of gravity.

Preferably, said opening defines an opening plane, said closure plane of said door assembly being substantially parallel to said opening plane, when said door assembly is in a closed configuration.

The door assembly of the invention perfectly closes the opening formed in the front wall of the laundry treatment device. Therefore no modification has to be made to the laundry treatment device, besides the door assembly itself.

Advantageously, said front wall defines a front wall plane which forms, at least for a portion of the same, a non-zero angle with said opening plane, said front surface of said front frame forming substantially the same non-zero angle with said opening plane.

In case of a tilted front wall of the laundry treatment device, the door assembly perfectly fit the same, being the inclination of the front wall and the inclination of the front surface of the front frame substantially the same and thus improving the overall aesthetic appearance of the device.

Brief description of the drawings

These and other features and advantages of the invention will better appear from the following description of some exemplary and non-limitative embodiments, to be read with reference to the attached drawings, wherein:

- figure 1 is a perspective view of a first embodiment of a laundry treatment device realized according to the present invention;
- figure 2 is a side view, in section, of the laundry treatment device of figure 1;
- figure 3 is a front view of a door assembly realized according to the present invention and used in the laundry treatment device of figures 1 and 2;
- figure 4 is a lateral view, in section along the B-B line of figure 3, of the door assembly of figure 3;
- figure 5 is a lateral view, in section along the A-A line of figure 3, of the door assembly of figure 3;
- figures 5a and 5b are two details, in an enlarged view, of the cross section of fig. 5;
- figure 5c is a rear view of door assembly of fig. 3;
- figure 5d is a lateral view of a component of door assembly of figure 3;
- figure 6 is a perspective rear view of the door assembly of figure 3 in a disassembled configuration;
- figure 7 is a further perspective front view of the door assembly of figure 3 in a disassembled configuration;
- figure 8 is an enlarged perspective view of two components of the door assembly shown in figures 6 and 7;
- figure 9 is a perspective view of a second embodiment of a laundry treatment device realized according to the present invention;
- figure 10 is a side view, in section, of the laundry treatment device of figure 9;
- figure 11 is a rear view of an additional embodiment of a door assembly realized according to the present invention and used in the laundry treatment device of figures 9 and 10;
- figure 12 is a lateral view, in section along the B-B line of figure 11, of the door assembly of figure 11;

- figure 13 is a lateral view, in section along the B-B line of fig. 11, of the door assembly of figure 11;
- figure 14 is the same lateral view of fig. 13, not in cross section, of the door assembly of figure 11;
- figures 14a and 14b are two details in enlarged view of the cross section of fig. 12;
- figure 15 is a perspective front view of the door assembly of figure 11 in a disassembled configuration;
- figure 16 is a further perspective rear view of the door assembly of figure 11 in a disassembled configuration;
- figure 17 is an enlarged perspective view of a component of the door assembly shown in figures 15 and 16;
- figure 18 is a lateral view of the component of figure 17;
- figures 19a,19b,19c are a front view, a lateral view and a rear view, respectively, of the door assembly of figs. 15 and 16 in a first assembled configuration according to the invention;
- figures 20a,20b,20c are a front view, a lateral view and a rear view, respectively, of the door assembly of figs. 15 and 16 in a second assembled configuration according to the invention;
- figures 21a and 21b are a lateral view in section and a front view, respectively, of an embodiment of a door assembly in an assembled configuration;
- figures 22a and 22b are a lateral view in section and a front view, respectively, of an additional embodiment of a door assembly in an assembled configuration;
- figures 23a-23c are a lateral view in section and two front views, respectively, of an additional embodiment of a door assembly in an assembled configuration;
- figures 24a and 24b are a lateral view in section and a front view, respectively, of an additional embodiment of a door assembly in an assembled configuration; and

- figures 25a and 25b are a lateral view in section and a front view, respectively, of an additional embodiment of a door assembly not according to the inventionin an assembled configuration.

Detailed description of the preferred embodiments

With initial reference to figs. 1, 2 and 9, 10, two embodiments of a laundry treatment device realized according to the present invention are globally indicated with 1 and 100, respectively. In these preferred embodiments, the laundry treatment devices 1 and 100 are dryers, however the present teaching can be applied to washing machines and washer-dryers as well.

Laundry treatment device 1; 100 comprises an outer box casing 7; 107 preferably but not necessarily parallelepiped-shaped, and a treatment chamber, such as a drum 3; 103 for example having the shape of a hollow cylinder, for housing the laundry and in general the clothes and garments to be washed and/or dried. The drum 3; 103 is preferably contained into the casing. In a preferred embodiment, drum 3; 103 can rotate around a preferably horizontal axis (in alternative embodiments, rotation axis may be vertical or tilted).

Access to the drum 3; 103 is achieved for example via an opening 4; 104 formed on the casing 7; 107 itself. Opening 4; 104 preferably faces drum 3; 103 and it is apt to be closed – or even sealed - by a door assembly 10; 110.

The door assembly 10; 110 is adapted to alternatively open and close the laundry loading opening 4; 104 of the laundry treatment device 1; 100 and is advantageously pivotally mounted, for example hinged, and thus supported at the casing 7; 107 of the device 1; 100. Door assembly 10; 110 can be operated, preferably, by a handle 31; 131 and better detailed below.

Preferably, casing 7; 107 generally includes a front wall 2; 102 to which the door assembly 10; 110 is pivotally mounted, a rear wall panel (not visible in the appended drawings) and two sidewall panels 71, 72; 171a, 172 all mounted on a basement 74; 174. Casing 7; 107 is then topped by a top wall panel 73; 173. Front wall 2; 102, top wall 73; 173, sidewall panels 71, 72; 171a, 172, rear wall panel and basement 74; 174 can be of any suitable material. Preferably, the basement 74, 174 is made of plastic material.

Preferably, sidewall panels, front wall, rear wall, top wall and basement are separated pieces which are then assembled together via suitable fastening means. However, it is

also encompassed by the present invention that some of these walls can be a single piece, for example lateral walls and rear wall can be a single U-shaped piece.

Walls are preferably made of metal, however also plastic is possible. Also, in a non-depicted embodiment, some of the walls can be made of a material, and some other(s) can be made of a different material.

By the laundry treatment device 1; 100 itself, in a standard operative position, a horizontal plane is defined (plane (XY) in Figure 1 and 9), which is generally the plane on which the bottom wall or basement 74; 174 lies and generally it is also parallel to the top wall 73; 173 of the casing 7; 107 in a mounted configuration. The device 1; 100 also extends along a vertical direction denoted with Z.

In a preferred embodiment, the front wall 2; 102 includes an external continuous surface 2a; 102a having one or more openings, such as laundry opening 4; 104. Further openings, for example to house a control panel or a water or detergent drawer, etc. are also possible. According to a preferred embodiment, the front external surface 2a; 102a of front wall 2; 102 is the external front surface of the device 1; 100.

Front wall 2; 102 is preferably made of a metallic material, for example in stainless steel.

The front surface 2a; 102a is preferably continuous and even more preferably seamless, at least in the visible portion(s) of the same. Continuous surface means that the surface is formed as a single member. “Seamless” means that, in addition to be continuous, there are no seams which indicate that for example welding has been used to join together different parts. In the covered (i.e., not visible from outside of the laundry treatment device 1; 100 in the assembled condition of the latter) portions of the front wall 2; 102, seams can be present. The absence of seams improves the overall appearance of the laundry treatment device 1; 100.

In addition, the front wall 2; 102 preferably includes four rounded corners 4a, 4b, 4c, and 4d along its outer edge. “Rounded corner” means a corner which does not include sharp and abrupt changes in directions of the surfaces forming the same; on the contrary in a rounded corner the surfaces merges smoothly and with continuity. The round corners give a more aesthetically pleasant look to the device 1; 100.

In an embodiment of the invention, the front wall 2; 102 can be obtained by a single sheet of metal. For example, it can be obtained by a sheet of stainless steel. In addition, the front

wall can be coated by suitable coating to prevent corrosion. Moreover, the front wall can be colored of any color and gloss.

Preferably, the front wall 2; 102 defines a top portion 4a', a middle portion 4a'' and a bottom portion 4a''', the terms "top", "middle" and "bottom" used with reference to the above defined standard standing configuration of the laundry treatment device 1, 100 when in use.

In a preferred embodiment, as shown in figure 1 and 9, only the top portion 4a' and the middle portion 4a'' of the front wall 4 are a single (or one-piece) element, i.e., having a continuous and/or seamless front surface, while the bottom portion 4a''' is a separate piece and is to be assembled to the rest of the front wall.

Preferably, but not necessarily, the opening 4; 104 and thus the door assembly 10; 110 are located in the middle portion 4a'' of the front wall 2; 102.

Advantageously, the front wall 2; 102 is not flat, i.e., it does not lie completely on a single plane. On the contrary, it includes a concavity pointing towards the inside of the casing 7; 107 being convex on the outside. In the depicted embodiment, better visible in the side views of figs. 2 and 10, the front wall 2; 102 – in a section along a plane parallel to the Z direction - has substantially a smoothed trapezoidal shape, the top 4a', the bottom 4a''' and the middle portion 4a'' lying on three different planes which form an angle one with respect to the other(s) and also with the vertical direction Z defined by the casing 7; 107, forming in this way the inward concavity. The three planes are preferably connected smoothly and without sharp corners. However, other layouts of the front wall 2; 102 are possible as well, for example the front wall can include a substantially constant curvature, the concavity still oriented towards the inside of the casing 7; 107. For example, the front wall could be a portion of a cylindrical mantel.

In a preferred embodiment, the middle portion 4a'' including the opening 4; 104 defines a surface not parallel to the Z direction, but tilted with respect to the latter. The section of casing 7; 107 along a vertical plane parallel to side walls 71, 72; 171, 172 as in figs. 2 and 10 shows a slight inclination of portion 4a'' with respect to the Z axis. Therefore it is preferred that the door assembly 10; 110 "matches" with this surface tilted with respect to the Z direction.

Laundry treatment device 1; 100 also comprises an electrical motor (not shown) assembly for rotating, on command, revolving drum 3; 103 along its axis inside casing. Casing 7; 107 revolving drum 3; 103 and electrical motor are common parts in the technical field and are considered to be known; therefore they will not be described further in details.

With now reference to figs. 3-5 and 11-14, door assembly 10; 110 includes a frame, which in turn includes two "half frames", a rear frame 5; 105 and a front frame 6; 106, one attached to the other.

The door assembly 10; 110 can have two different operative positions or configurations: a closed position in which it is abutting against the front wall 2; 102, and an open position in which is separated from the front wall, with the exception of the connecting element (e.g., hinge) location. In order to move door assembly from the closed to the open configuration or vice-versa, handle 31; 131 is used.

The wording "rear frame" 5; 105 is indicating in the following the portion of the frame of door assembly 10; 110 a surface of which, called rear surface 5b; 105b, is substantially in contact with casing 7; 107 when the door assembly 10; 110 is in the closed operative position (as shown in fig. 2 or fig. 10), while the front frame 6; 106 is defined as the portion of the frame of door assembly 10; 110 a surface of which, called front surface 6a; 106a, is mainly facing the exterior when the door assembly 10; 110 is closed onto casing 7; 107, i.e., it faces a direction opposite to the casing.

Preferably, with now reference to figs. 4, 5 and 14a, 14b, front frame 6; 106 includes in addition to the front surface 6a; 106a also a rear surface 6b; 106b, the latter being apt to be in contact with or facing the rear frame 5; 105 when the door assembly 10; 110 is in an assembled configuration. Analogously, rear frame 5; 105 includes a front surface 5a; 105a which is apt to be in contact with or facing rear surface 6b; 106b of front frame 6; 106 when the door assembly 10; 110 is in an assembled configuration, and it is also opposite to rear surface 5b; 105b in contact with the casing 7; 107 when door assembly 10;110 is mounted and in a closed operative position (as in figs. 2 and 10).

Preferably, rear and front frame 5, 6; 105, 106 are made of plastic, more preferably each of them is formed as an integral piece of plastic, for example by injection molding.

As better visible in figs. 15 and 16, front and rear frame 106, 105 of door assembly 110 are advantageously ring shaped, with respective central door apertures 109, 108 so as to form a substantially round-shaped door assembly 110, when connected one to the other.

In door assembly 10, as visible in figures 6 and 7, front frame 6 is also ring-shaped including an aperture 9, while rear frame is disc-shaped and does not include an aperture.

However, the shape of door assembly 10; 110 and thus of front and rear frame 6; 106, 5; 105, is arbitrary, for example the door assembly 10; 110 can be substantially polygonal, such as rectangular, quadratic, triangular, or elliptic when a front view of the same is considered.

Door frame assembly 10; 110, when assembled, defines an outer perimeter edge 11;111, which is the outer contour of the frame. As discussed above, in the depicted embodiments, preferably the outer perimeter edge 11; 111 describes a circumference, however any other shape is envisaged by the present invention depending on the door assembly final desired shape 10;110.

In any case, the presence of an aperture 108, 109 in the frame of door assembly 110 is preferred when the laundry treatment device 100 is a washing machine so that an user can view the laundry from outside the casing 107 during the treatment cycles. In turns, this implies that two apertures 109, 108 called in the following front and rear apertures, in both front and rear frame 106, 105 are preferably formed. Front and rear frame 106, 105 are therefore so mounted that the two apertures 109, 108 overlap, at least partially. Preferably, the front and rear apertures 109, 108, of front and rear frame 106,105 of door assembly 110 as well as front aperture 9 of the front frame 6 of door assembly 10, have an arbitrary geometrical shape and they are advantageously closed or covered by an additional element. Preferably, the aperture 9; 108, 109 is circular.

In the embodiment of door assembly 110, as better visible in figs. 13 and 14, the aperture 108 in rear frame 105 is closed by a door glass 180 having a bowl shape. Preferably, door glass 180 is made of transparent glass capable of withstanding high temperatures and/or the chemicals which can be present in an embodiment in which the laundry treatment device 100 is a washing machine (embodiment not shown) during washing and/or drying cycles. The door glass 180 is assembled together with front and rear frame 106, 105 so as to close aperture 109, 108 preferably in an air-tight manner, so that no fluid can exits laundry treatment device 100 during operation. Preferably, door glass 180 includes a

flange 181 protruding in a radial direction around its periphery, and more preferably the flange 181 encircles the entire perimeter of the door glass 180. Flange 181 is preferably interposed between front and rear frame 106, 105 (see figure 14a and 14b) when the door assembly 110 is in an assembled configuration.

Preferably but not necessary, door glass 180 has a concave shape, and more specifically it is concaved toward drum 103, with the concave portion protruding inwards toward the drum 103 through opening 104 formed in front wall 102.

A bowl-shaped element 80 is also present in embodiment of door assembly 10, however it is not a separate component, on the contrary it is an integral piece of rear frame 5, for example rear frame 5 including bowl-element 80 can be molded as a single block (see figs. 4 and 5).

In the preferred embodiment in which a door aperture 9; 109, 108 is present in front and/or rear frame 6, 106; 5, 105, an inner edge or border 9a; 109a, 108a is consequently defined in the front 6; 106 and/or rear frame 105 itself as the edge of the door aperture 9; 109, 108.

With now reference to figs. 2, 5, and 10, 14, according to one aspect of the invention, the rear surface 5a; 105a of rear door frame 5; 105 defines a closure plane PB. The closure plane is defined by the portion of rear surface that abuts on the casing 7; 107, when the door assembly 10; 110 is in a closed configuration on casing 7; 107. Generally, such plane PB is parallel to an opening plane PC defined by the opening 4; 104 obtained in the front wall 2; 102. The opening plane PC is the plane on which the opening 4;104 lies. The opening plane PC and the closure plane PB may coincide or they can be one parallel to the other. Opening and closure plane PC, PB are better visible in figures 2 and 10.

Preferably, closure plane PB and opening plane PC are substantially parallel to the Z axis. However a closure plane and/or an opening plane tilted with respect to the Z axis are included as well.

Front surface 6a; 106a of front frame 6; 106 also define a plane, called maximal area front plane PA.

Front plane PA and closure plane PB form an angle α therebetween which is different from 0° and 180°, i.e., planes PA and PB are not parallel one to the other, but they are incident.

With now reference to figures 21a-25b, the front frame plane PA is defined as follows. A "virtual" plane is considered and it is put into contact, again "virtually", with the front surface 6a; 106a of the front frame 6; 106. The location where the virtual plane is "stable" on the front frame 6; 106, i.e., it contacts the front surface 6a; 106a in at least three different points, defines the location of a candidate front plane.

The candidate front plane which defines the maximal virtual area on the front surface of front frame 6; 106 is the maximal area front plane. The area is calculated as follows, for each candidate front plane.

In a first possible situation, all candidate front planes, when put in contact to the front surface 6a; 106a of the front frame 6; 106, define, on the front surface, at least a closed curve or an area. The latter case takes place when the front surface 6a; 106a includes a planar (e.g., flat) portion. This means that the geometrical locus of the points belonging to the front surface 6a; 106a which "touches" the candidate front plane defines either a closed curve or an area (it is also possible that it defines two or more closed curves or two or more distinct areas). Each closed curve encircles an area. The candidate front plane is then the plane that forms the largest of these areas, the largest among all the areas encircled by the closed curves and the areas defined automatically by the direct contact between the candidate planes and the front surface 6a; 106a.

In a second possible situation, there is (are) candidate front plane(s) which, when in contact with the front surface 6a; 106a, do not form a closed curve. These candidate front planes might be the only defined candidate front planes in the door assembly of interest, or candidate front planes defining closed curves or areas can be present as well, e.g., a combination of candidate front planes forming closed curves or areas and candidate front planes not forming such closed curves can be defined. For each of those candidate front planes which do not form a closed curve, the locus of points of contact between the candidate front plane and the front surface includes at least a set of isolated points, or a set of isolated points and curves (not closed) or a set of curves separated one from the other. Connecting all elements of the set, e.g., connecting all points and/or curves of the set via segments forms a closed curve. As above, this closed curve defines an area, which is the area encircled by the closed curve. Again, the largest area among all defined areas, i.e., among the areas defined by candidate front planes which by themselves define closed curves or areas and the areas encircled by these closed curves initially formed by separated element, selects the front plane.

In both cases, the candidate front plane defining the largest area (regardless of how this area is formed, either directly, or as the internal area of the closed curve or as the internal area of the curve which is closed joining different points or curves) on the front surface is the maximal area front plane.

The closure plane PB is depicted, as the vertical dashed line in figs. 21a, 22a, 23a, 24a and 25a: the closure plane is defined by the portion of rear frame that abuts against the front wall 2; 102 or casing 7; 107. Rear frame 5; 105 is not depicted for clarity. In the depicted embodiments, the door assembly 10; 110; 10PA is positioned parallel to the Z axis; however the closure plane PB could be tilted as well.

Figs. 21b, 22b, 23b, 24b and 25b represent a front view of the five different embodiments of the door assembly 10; 110; 10PA, while figs. 21a, 22a, 23a, 24a, and 25a represent a section of the door assembly 10; 110; 10PA of figs. 21b, 22b, 23b, 24b, and 25b, respectively, along a vertical plane passing through the center axis of the respective front view (section along line A-A of the front views).

Figures 21a and 21b, and 22a and 22b show two different embodiments of a door assembly 10; 110, in which a single location for a stable front plane is present.

As clear from the figs. 21a and 21b, the front frame includes a prism “prism” having a triangular base and axis substantially perpendicular to the Z axis. On one face of the prism, a quarter of a cylinder “cylinder” is attached, the cylinder having an axis parallel to the axis of the triangular prism. The triangular prism has a right rectangle as a base, a side of which lies on the closure plane PB, the other side being in contact to the cylinder portion. The front surface 6a; 106a thus includes a rectangular flat portion, which is one side of the prism, and a curved portion being a portion of the outer surface of a cylindrical mantel of the cylinder. The outer edge 11; 111 of the frame is substantially rectangular. The section of the front frame along line A-A includes a triangle to the bottom base of which a quarter of circumference is connected. The front surface 6a; 106a includes as said a flat surface (a rectangle), therefore the area defined by “putting into contact a candidate front plane PA” onto the front surface of front frame corresponds to the area of the rectangular portion of the front surface itself. There are no other possible positions for a candidate front plane, due to the fact that there is no other stable position for a plane on this door assembly layout, thus the plane PA defining an area equal to the area of the flat portion of front surface is the front plane itself. The gray area depicted in fig. 21b is

therefore the area defined by the single candidate front plane which is also the front plane (or maximal area front plane). As shown, planes PA and PB define an angle α therebetween different from 0° and 180°.

In figures 22a and 22b, a single candidate front plane is also present. However in this case, the front frame is torus-shaped, defining aperture 9; 109, where the torus has a generating circumference having variable diameter, in particular it has its minimal diameter at its top-most edge and its maximal diameter at the lower-most edge. The outer edge 11; 111 of the frame is thus a circumference, as visible in fig. 22b. The front surface 6a; 106a includes a portion of a torus outer surface. Putting onto contact a virtual front plane with the front surface of the front frame described above, which is curved without any flat portion, defines a closed curve, in this particular case an ellipse, i.e., the locus of points of the contact between the front surface 6a; 106a and the candidate plane PA is an ellipse, which is a closed curve. This closed curve of contact is represented in fig. 22b as a dashed line. The area internal to this curve (which, as said, is an ellipse) is the area defined by the candidate front plane. It is clear that this area includes portions of the front surface 6a; 106a, as well as additional portions, such as portions of aperture 9; 109 (in this case the whole area of the aperture). In this case, there is no comparison to be made among different areas because a single candidate front plane PA is present which is the front plane. No other plane can be stably positioned on the front surface.

In figures 23a-23c, an embodiment of a door assembly 10;110, in which five different candidate front planes PA1, PA2, PA3, PA4, PA5 are defined is depicted. Figures 23a and 23b corresponds to the same view of figures 21a,22a and 21b,22b above described. The front frame of this embodiment has a substantially rectangular outer edge 11;111 and includes an aperture 9; 109 substantially centrally located. The rectangle defined by edge 11,111 has two opposite sides, in particular the top most and lower most side with respect to the Z axis, substantially parallel to the (X,Y) plane. The front frame 6; 106 of this embodiment includes, in a position corresponding to the top most and lower most sides, two prisms “prism 1” and “prism 2” having a triangular base. The two triangular prisms have an axis perpendicular to the Z axis and are positioned one on top of the other. Preferably, the base triangle of each prism is a right triangle, which one side lying on the closure plane PB. Therefore, the section of the front frame 6; 106 along the vertical plane defines two triangles, one for each prism, as visible in fig. 23a; thus a top-most and lower-

most triangle are formed. The two triangles have different dimensions. Five candidate front planes are defined by the present front frame of this embodiment:

- a first candidate front plane PA1 which lies on one face of the upper-most triangular prism, corresponding to the hypotenuse of the triangle, and thus the contact between the plane PA1 and the front surface 6a; 106a defines a first virtual surface area equal to the surface area of the prism face;

- a second candidate front plane PA2 which lies on one face of the lower-most triangular prism, corresponding to the hypotenuse of the triangle, and thus the contact between the plane PA2 and the front surface defines a second virtual surface area equal to the surface area of the prism face;

- a third candidate front plane PA3 which is in contact to an edge of the top-most prism and an edge of the lower-most prism. The third candidate front plane thus defines two parallel lines as locus of contact points. These two parallel lines form a closed curve when connected at their opposite ends, so that a rectangle is defined. The area inscribed in the rectangle is the third virtual surface area;

- a fourth candidate front plane PA4 which lies on another face of the upper-most triangular prism, corresponding to the free side of the triangle, and thus the contact between the plane PA4 and the front surface defines a fourth virtual surface area equal to the surface area of the prism face;

- a fifth candidate front plane PA5 which lies on another face of the lower-most triangular prism, corresponding to the free side of the triangle, and thus the contact between the plane PA5 and the front surface defines a fifth virtual surface area equal to the surface area of the prism face.

In figure 23b the virtual surface areas defined by the candidate front planes P1-P5 in a front view of the door assembly 10; 110 are shown. Surface areas defined by PA4 and PA5 are perpendicular to the drawing and thus are not visible. However, the area defined by P5 is less extended than the area defined by PA3 and the area defined by PA4 is smaller than the area defined by PA1, so they cannot define the maximal area and thus none of them can be the front plane of this door assembly 10; 110.

The first virtual area defined by PA1 is represented as a rectangle filled with diagonal lines. The second virtual area defined by PA2 is represented as a rectangle filled with horizontal

lines. The third virtual area defined by PA3 is also a rectangle that overlaps completely with the second virtual area and is filled with vertical lines. It is clear from the drawing that the maximal area, i.e., the most extended area, is the one defined by PA3 which is then the front plane. The front plane PA3=PA and its area are depicted alone in fig. 23c.

Figs. 24a and 24b shows an embodiment of a door assembly 10; 110 where the front frame has the same layout as in the embodiment of figs. 23a-23c and in addition, in the location of front frame where in figs. 23a-23c the aperture 9; 109 is present, a half cylindroid "cylindroid" is realized covering the aperture completely. The half cylinder has an axis which is positioned parallel to the axis of the two triangular prisms. The section of this door assembly defines two triangles and a semi-ellipsoid in between the two triangles, without any overlap between the various geometrical figures. The candidate front planes which are definable in this embodiment are:

- a first candidate front plane PA1 which lies on one face of the upper-most triangular prism, corresponding to the hypotenuse of the triangle, and thus the contact between the plane PA1 and the front surface defines a first virtual surface area equal to the surface area of the prism face;

- a second candidate front plane PA2 which lies on one face of the lower-most triangular prism, corresponding to the hypotenuse of the triangle, and thus the contact between the plane PA2 and the front surface defines a second virtual surface area equal to the surface area of the prism face;

- a third candidate front plane PA3 which in contact to an edge of the top-most prism and an edge of the lower-most prism. The third candidate front plane thus defines two parallel lines as locus of contact points. These two parallel lines form a closed curve when connected at their opposite ends, so that a rectangle is defined. The area inscribed in the rectangle is the third virtual surface area;

- a fourth candidate front plane PA4 which lies on another face of the upper-most triangular prism, corresponding to the free side of the triangle, and thus the contact between the plane PA4 and the front surface defines a fourth virtual surface area equal to the surface area of the prism face;

- a fifth candidate front plane PA5 which lies on another face of the lower-most triangular prism, corresponding to the free side of the triangle, and thus the contact between the

plane PA5 and the front surface defines a fifth virtual surface area equal to the surface area of the prism face;

- a sixth candidate front plane PA6 which is in contact to an edge of the top-most prism and a contact line defined on the half-cylindroid. The sixth candidate front plane thus defines two parallel lines as locus of contact points. These two parallel lines form a closed curve when connected at their opposite ends, so that a rectangle is defined. The area inscribed in the rectangle is the sixth virtual surface area;

- a seventh candidate front plane PA7 which is in contact to an edge of the lower-most prism and a contact line defined on the half-cylindroid. The sixth candidate front plane thus defines two parallel lines as locus of contact points. These two parallel lines form a closed curve when connected at their opposite ends, so that a rectangle is defined. The area inscribed in the rectangle is the seventh virtual surface area.

In other words, two candidate front planes in addition to the five of the previous embodiment are present in this frame layout. It is also clear that one plane, the third plane PA3, sections a portion of the front frame, e.g., it sections the central half-cylindroid. However, as better visible in fig. 23b, the curve defined by the sectioned portion, is not part of the closed curve which encircles the area defined by the third plane and thus it is acceptable according to the set rules.

Checking the dimensions of the seven different areas, it is clear that the largest area is the one defined by PA3 which is then the front plane PA, as in the previous case.

In all the described embodiments, the closure plane PB and the front plane PA form an angle therebetween, i.e., they are not parallel. This angle α can vary in values, as long as it is different from 0° and 180°. Preferably it is smaller than 10°.

In figs. 25a and 25b, a different embodiment of a door frame 10PA not according to the invention is described. In this door assembly, the front frame includes a parallelepiped portion in the center of which a half-cylinder is positioned. In section along line A-A, therefore, the front frame defines a rectangle on which – in the central portion – a half-circumference is located protruding outwardly from the rectangle. The parallelepiped portion is positioned with two opposite faces substantially parallel to the closure plane PB. The front surface 6a; 106a of this embodiment includes two opposite faces, flat surfaces, of the parallelepiped and one portion, substantially perpendicular to the two faces, which is

partly flat and partly a portion of a cylinder mantel. Five candidate front planes are thus defined:

- a first candidate front plane PA1 which lies on the upper-most face of the parallelepiped and thus the contact between the plane PA1 and the front surface defines a first virtual surface area equal to the surface area of the parallelepiped face;

- a second candidate front plane PA2 which lies on the lower-most face of the parallelepiped and thus the contact between the plane PA2 and the front surface defines a second virtual surface area equal to the surface area of the parallelepiped face;

- a third candidate front plane PA3 which lies on the face of the parallelepiped substantially parallel to the closure plane PB and which sections the central cylindrical portion. The contact between the plane PA3 and the front surface is thus two parallel rectangular areas separated in the middle by an additional rectangular portion. In order to form a closed curve, the two rectangles are connected at their ends so that a single closed rectangle is obtained including the two initial rectangles and the one defined therebetween;

- a fourth candidate front plane PA4 which is in contact to a top-most edge of the parallelepiped and a contact line defined on the half-cylinder. The fourth candidate front plane thus defines two parallel lines as locus of contact points. These two parallel lines form a closed curve which, when connected at their opposite ends, defines a rectangle. The area inscribed in the rectangle is the fourth virtual surface area;

- a fifth candidate front plane PA5 which is in contact to a lower-most edge of the parallelepiped and a contact line defined on the half-cylinder. The fifth candidate front plane thus defines two parallel lines as locus of contact points. These two parallel lines form a closed curve when connected at their opposite ends, so that a rectangle is defined. The area inscribed in the rectangle is the fifth virtual surface area.

Comparing the extension of these areas, the maximal area is given by PA3, which is parallel to the closure plane PB. $\alpha = 0°$. This door assembly 10PA therefore does not belong to the invention.

In the frame of the invention, the front 6; 106 and rear frame 5; 105 define two different planes, PB and PA, which are not parallel one to the other. Due to the fact that the front and the closure plane PA, PB form an angle α therebetween different from 0° and 180°, the frame including front frame 6; 106 and rear frame 5; 105 does not have a uniform

thickness in proximity of its perimeter edge 11; 111. Preferably, the thickness of the frame changes gradually and continuously along its edge 11; 111, from a minimum to a maximum thickness. More preferably, the thinnest portion of door frame in proximity of its edge and the thickest portion of door frame in proximity of its edge 11; 111 are located in such a way that one is the reflection of the other across an axis of the door assembly 10; 110. Preferably, this axis is perpendicular to a hinge axis H of rotation of the door assembly 10; 110 when the latter is assembled on the casing 7; 107 and more preferably this axis passes through a geometrical center of the door assembly. This in turn means that preferably the top-most portion of the frame, which includes a first portion of the edge 11; 111, and the lower-most portion of the frame, including a second portion of the edge 11; 111, are respectively the thinner and thickest portion of the frame which contains the edge of the same.

For example, as visible in figure 5, which is the section along line A-A of figure 3, the shown door assembly 10 has a thickness T1, which is the thinnest thickness of the frame along its edge, in a portion of front frame 6 which is top-most located when the door assembly 10 is attached to the casing 7, while it has a thickness T2, which is the thickest thickness of the door frame along its edge 11, in a portion of door frame which is lower-most located when the door assembly 10 is attached to casing 7. Planes PA and PB are depicted as well.

The same is applicable to door assembly 110 as depicted in fig. 13, section along line A-A of fig. 11. Due to the fact that the angle α is relatively small and it is not possible to show the effective intersection between planes PA and PB, in figure 13 also the normal axes to plane PA and plane PB are shown passing through the geometrical center of the door assembly 110. From the non-parallel orientation of the two normal axes, the angle α is better visible.

The frame may include thicker or thinner portions than the portions having thickness T1 and/or T2 in its geometrical layout, however these additional portions do not include the edge 11; 111 of the frame. An example is the embodiment depicted in fig. 24a, where the central cylinder can be thicker, in its central portion, than the prism, so defining a thicker thickness of the frame in that position than in the lower-most edge portion of the frame..

Front frame 6; 106 and rear frame 5; 105 can be realized as a single piece or as an assembly of different pieces. For example, in the door assembly 10 of figs. 1-7, the front

frame 6 includes a single piece, while in the door assembly 110 of figs. 9-20c, the front frame 106 includes a first element 170 and a cover ring 150. Cover ring 150 includes the front surface 106a of front frame 106 and it represents the “most external” element of the door assembly 110, when the latter is coupled to casing 107. The cover ring 150 gives a better aesthetic appearance to the door assembly 110, covering all possible holes and elements present in the front frame to couple the same to the rest of the door assembly. The front frame aperture 109 is thus formed by two overlapping apertures realized in the first element 170 and in the cover ring 150 which, when the front frame 106 is assembled, define a single inner edge 109a of the aperture 109. Preferably, the shapes of the first element 170 and of the cover ring 150 are similar.

The front frame 6; 106 and the rear frame 5; 105 are coupled one to the other, preferably in a removable manner. Preferably, the coupling is obtained by means of coupling elements 21; 121 and corresponding coupling counter elements 22; 122 formed in the front and rear frame, respectively.

In the depicted embodiments, said coupling elements 21; 121 extend from the rear surface 6b; 106b of the front frame 6; 106 while said coupling counter elements 22; 122 extend from the front surface 5a; 105a of said rear frame 5; 105.

Preferably, coupling elements 21; 121 extend substantially perpendicularly to the rear surface 6b; 106b of front frame 6; 106, at least locally, e.g. they are substantially perpendicular to the portion of the rear surface from which they depart. In addition or alternatively, counter elements 122 extend perpendicularly, at least locally, to the front surface 105a of rear frame 105, while counter elements 22 have substantially a negligible height or extension.

With reference to figs. 5a, 5b and 14a, 14b, 17, 18 in the depicted embodiments, each coupling element 21; 121 includes an appendix 90, 190. Preferably the appendix 90; 190 includes a tubular sleeve 91; 191, having an open end. Alternatively, in a non-depicted variant, the element 21; 121 may include a cylindrical rod. It is desired that the dimensions of the sleeves and/or cylindrical rods, e.g., the diameters of elements and counter-elements, are such that the elements can be inserted within the counter elements or vice-versa. Even more preferably, the insertion of the elements into the counter-elements or vice-versa is obtained with interference so that, when a coupling element is inserted in a

coupling counter element (or vice-versa) the removal requires the application of a non-negligible force, so that the possibility of accidental removals is minimized.

In the embodiment of door assembly 10, as better visible in figs. 5a, 5b, and 6, each coupling element 21 departing from the rear surface 6b of front frame 6 includes a tubular sleeve 91 departing from a pedestal 92. In other words, the tubular sleeve is not directly connected to the rear surface 6b of front frame 6, but it is positioned on the pedestal 92. Coupling counter-elements 22 are realized as through holes on rear frame 5, in which the tubular sleeve 91 of coupling elements 21 can be inserted. Instead of through-holes, coupling counter-elements 22 could include appendices 90 as well. It is preferred that in this embodiment coupling elements 21 includes tubular sleeves 91 and not cylindrical rod, so that fastening screws 25 can be inserted from rear surface 5b of rear frame 5 into the through-holes defined by coupling counter-elements 22 and then into the tubular sleeves 91 of coupling elements 21, so as to better fasten front and rear frame 6, 5 together. .

In the embodiment of door assembly 110, as better visible in figs. 14a and 14b, which are enlarged views of two portions of fig. 12 which is in turn a section of fig. 11 along line B-B, the cover ring 150, part of the front frame, includes a rear surface 151, facing the first element 170, from which the elements 121 depart. The first element 170 includes a plurality of through holes 171 through which the coupling elements 121 are inserted. The coupling elements 121 are thus also protruding from the rear surface 106b of the first element 170. Preferably, the coupling elements 121 are substantially perpendicular to both rear surface 151 and rear surface 106b. Coupling element 121 includes a tubular sleeve 191 departing from a pedestal 192. In other words, the tubular sleeve is not directly connected to the rear surface 151 of cover ring 150, but it is positioned on the pedestal 192. Coupling counter-element 122 departing from the front surface 105a of rear frame 105 includes a tubular sleeve 191 directly departing from the front surface 105a.

From the through holes 171, appendices 190a depart from the rear surface 106b. Each appendix 190a, which is pierced, also includes a pedestal 192a on which a tubular sleeve 191a is mounted. The shape and dimensions of pedestal 192a and tubular sleeve 191a are such that each appendix 190 can enter completely in a respective appendix 191a, with pedestal 192 abutting to an inner top surface of pedestal 192a and sleeve 191 protruding outside sleeve 191a. In addition, rear surface 151 of cover ring 150 is in contact to front surface 177 of first element 170, so that the two surfaces are substantially parallel.

The coupling elements 21; 121 and the coupling counter-elements 22; 122 are located in the front 6; 106 and rear frame 5; 105, respectively, in proximity of the outer edge 11; 111 of the door frame. More preferably, the coupling elements 21; 121 and counter elements 22; 122 are angularly spaced one from the other, even more preferably with a substantially constant spacing one from the other so that the whole extension of the edge 11; 111 contour of the door frame is substantially followed by the elements and counter elements. It is to be understood that, fixed the location of one of the plurality of elements or counter-elements in the front or rear frame, the location of the other of the plurality of elements or counter-elements on the other of the front or rear frame is fixed as well, the elements having to match with the corresponding counter-elements.

Preferably, for each element 21; 121 in the front frame 6; 106, a counter element 22; 122 is present in the rear frame 5; 105 in a bijection correspondence.

Preferably, coupling elements 21; 121 and/or coupling counter elements 22; 122 are integrally formed with the front 6; 106 and/or rear frame 5; 105. Preferably, elements and/or counter elements are made of plastic material, so that elements and counter elements are realized with the respective front and rear frame in a single molding process.

According to an aspect of the invention, either the coupling elements 21; 121, or the coupling counter-elements 22, 122, or both, have different heights among themselves. In other words, either the plurality of elements 21; 121 includes at least a first element having a first height D1 different from a height D2 of a second element of the plurality, or the plurality of counter elements 22; 122 includes at least a first counter element having a first height D1 different from a height D2 of a second counter element of the plurality. Alternatively, both plurality of elements 21; 121 and counter elements 22; 122 include, within the same plurality, two elements/counter elements having different heights.

More preferably, the plurality of coupling elements 21; 121 and/or the plurality of coupling counter elements 22; 122 include a plurality of different heights so that the thickness of the frame of the door assembly 10; 110 can vary continuously and smoothly. Being the elements and counter-elements located in correspondence of the edge of the frame 11; 111, having a plurality of different heights allow to give to the frame a continuous variation in thickness at its edge 11; 111.

In the door assembly 10, coupling counter-elements 22 are through-holes and thus have a substantially negligible height which is thus equal among all coupling counter-elements.

On the other hand, the front frame 6, as better visible in fig. 6, includes a plurality of coupling elements 21 having different heights extending from the rear surface 6b of front frame 6. These elements 21 include sleeves 91, all having the same height, positioned on respective pedestals 92 which have different heights; thus also coupling elements 21 have different heights among themselves. Preferably, a plurality of different heights is defined in the pedestals. Even more preferably, a number of different heights equal to the number of coupling elements 21 is present.

As shown in fig. 4, the plurality of counter-elements 22 have different heights from a minimum height D1 in the top-most portion of the front frame 6 to a maximum height D2 in the lower-most portion of the front frame 6.

As better visible in figure 5d, which is a sides view of rear frame 5 in a position as if it were assembled on casing 7 and in a closed configuration of door assembly 10, rear frame 5 further includes a plurality of centering-elements 23 protruding from front surface 5a, substantially perpendicularly to the latter. Centering elements 23 are located in proximity of the edge of rear frame 5, in a radially inward position with respect to the position of coupling counter-elements 22 and they are angularly spaced one from the others. These centering-elements 23 also, among themselves, have different heights, from a maximum height L2 at the lower-most portion of rear frame 5 and a minimum height L1 at the top-most portion of rear frame 5. The function of these centering elements 23 is three-folds: to support of additional elements positioned on top of the rear frame, to improve the centering of such additional elements and to avoid rotations of the same, as better detailed below.

Figs. 17 and 18 show in an enlarged view the cover ring 150 of door assembly 110 from which the plurality of elements 121 departs. Each element 121 includes a tubular sleeve 191 surmounting a pedestal 192. Tubular sleeves 191 have all the same height, while pedestals 192 have a height which changes from a minimum to a maximum, so that the elements 121 include the tallest element with height D2 and the shortest element with height D1, and preferably also a plurality of coupling elements having intermediate height between D1 and D2. Even more preferably, a number of different heights equal to the number of coupling elements 121 is present.Coupling counter-elements 122 of door assembly 110 protrude from the front surface 105a of rear frame 105 and include tubular elements 191 departing directly from the front surface 105a. No pedestal is present. Preferably, the counter-elements 122 have all the same height.

The coupling between the front frame 6; 106 and the rear frame 5; 105, is realized by inserting the coupling elements 21; 121 into the coupling counter-elements 22; 122. At the same time, due to the different heights of the coupling elements 21; 121 and/or coupling counter elements 22; 122, the resulting thickness of the frame at its edge 11; 111 varies depending on the position along the edge itself.

Before inserting coupling elements 121 in coupling counter-elements 122, coupling elements 122 are inserted in holes 171 and appendices 190a.

Appendices 190a are located around first element 170 in correspondence of appendices 190 of cover ring 150. Pedestals 192a have also different heights, matching the height difference of the pedestals 192, so that each pedestal 192 is in abutment against the inner top surface of pedestal 192a and surfaces 151 and 177 are parallel one to the other. The height of tubular sleeves 191a is constant and so dimensioned that, when front frame and rear frame are assembled together, tubular sleeves 191 of coupling elements 121 protrude from tubular sleeves 191a and the free end of tubular sleeve 191a is in abutment against the free end of tubular sleeves 191 of coupling counter elements 122, where the tubular sleeves 191 of coupling elements 121 are inserted. This abutment takes place for all appendices 190a and coupling counter elements 122. This means that the free ends on coupling counter elements 122 and the free ends of appendices 190a define two planes, which are parallel and more preferably coincident.

This matching of planes, or in other words this abutment of sleeves, improves the solidity of the frame and avoids any translational movements of the components of the same.

Therefore, the coupling elements 21; 121 and counter-elements 22; 122 can be used not only to couple front 6; 106 and rear frame 5; 105 together, but also to determine the angle α different from 0° and 180° between the front plane PA and the closure plane PB due to their different heights. However, the “tilt” present between the front PA and closure plane PB can be created in other ways and it is not necessary that the front 6; 106 and rear frame 5; 105 are coupled using coupling elements 21; 121 and coupling counter-elements 22; 122 having different heights.

Moreover, coupling elements 21; 121 and coupling counter-elements 22; 122 may have many different other shapes and configurations than the tubular one above described.

In the embodiment of door assembly 110, with particular reference to figs. 13, 15, 16 as well as 14a and 14b, a different element, called cap element 140, than the coupling elements and counter-elements creates the "tilt" between the front plane PA and the closure plane PB, so that they are not parallel.

Cap element 140 defines an outer edge 145 which is sandwiched between front and rear frame 106, 105. Cap element includes a plate-like member 146 which covers completely the apertures 108,109 formed in the frame. The shape of the cap element, and in particular of the plate-like member 146 corresponds substantially to the shape of the front and rear frame 106, 105 so that a good aesthetic match can be provided.

The function of the cap-element 140 is two-folds.

In a washing machine, which is a possible non-depicted embodiment of device 100, often the temperature of the water can reach rather high values, thus the glass door 180 can also reach a substantially elevated temperature which can harm the user in case of contact between a user's body part and the glass door 180. In order to avoid this drawback, a protective element is interposed between the user and the glass door. This protective element is the cap element 140 which is mounted between the front frame and the glass door so as to cover completely the glass door itself. The plate-like member 146 thus defines the most external surface of the door assembly which is located in the aperture 109 of front frame 106 and which is accessible to the user for contact.

Preferably plate-like member 146 is made of plastic and even more preferably it is made of a transparent, or at least semi-transparent, plastic material.

The cap element 140 has two opposite first and second sides, one facing the glass door 180 and the other facing the front frame 106, when the door assembly 110 is in an assembled configuration. The first side facing the glass door 180 defines a first surface 141 which defines a first plane. The second side facing the front frame 106 defines a second surface 142 which in turn also defines a second plane. These two first and second planes are not parallel to each other; on the contrary they form an angle therebetween.

The first surface 141 defining the first plane is the surface which is in abutment to the neighbouring element to cap element 140 located behind the cap element 140 when the door assembly 110 is in an assembled configuration. In this case, surface 141 is the surface which is in abutment against glass door 180 and/or rear frame 105.

The second surface 142 defining the second plane is the surface which is in abutment to the neighbouring element of the door assembly located directly in front of the cap element 140 when the door assembly 110 is in an assembled configuration on casing 107.

In this way, any element abutting on one side of the cap element 140 is automatically tilted with respect to another element abutting on the opposite side of the cap element.

If the construction of rear frame 105 and the glass door 180 is such that they do not create any tilt with respect to the closure plane PB to any component of the door assembly mounted on them, any further component mounted on them (e.g., in abutment against the glass door) remains substantially parallel to the closure plane PB. Cap element 140 abuts with its first surface 141 against the glass door 180: the first plane defined by the first surface 141 is therefore parallel to the closure plane PB. Being the opposite second surface 142 of the cap element 140 angled with respect to the first surface 141, it means that second plane defined by the second surface 142 is also angled with respect to the closure plane PB. Any component mounted, e.g. in abutment against, the second surface 142 of the cap element 140, results thus tilted with respect to the closure plane of the angle present between the first and second plane defined by the first and second surface 141, 142 of cap element 140.

For example, the tilt can be realized as follows: in the second side of the cap element 140 facing the front frame 106, a ridge 143 can be formed. The ridge 143 can be for example be formed in an edge surface 145a of cap element 140. Edge surface 145a is an annular surface containing the outer edge 145 of cap element 140 and extending in a radially inward direction towards the center of the cap element 140. The ridge 143 may have different heights along its extension depending on its position. Preferably, the ridge 143 has the shortest height at a location which is the top-most one when door assembly 110 is mounted on casing 107, and the highest height at a location which is the lower-most one when door assembly is mounted on casing 7. The ridge 143 having different thicknesses can be seen clearly in fig. 13 where a section along the vertical center-plane of door assembly 110 is depicted (line B-B of figure 11).

Figs. 14a and 14b, although not depicting the top-most and lower-most portion of door assembly 110, show also a difference in the height of the ridge 143 in two different portions of the frame. The second surface 142 is thus formed by the top of ridge 143 which

have a variable height and thus the second plane lying on such a second surface results tilted.

The first surface 141 is, in this embodiment, the surface of the plate-like member 146 facing casing 107.

In order to better highlight the two different surfaces 141, 142 of cap element 140 defining the two different planes, in the section of fig. 13 the two planes are depicted and labelled 141, 142 (as the first and second surfaces which are too small to be clearly identified in the figure).

It is to be understood that ridge 143 could be formed in the first surface as well.

Preferably, in an assembled configuration of door assembly 110, the first plane defined by the first surface 141 results substantially parallel to the closure plane PB and the second plane defined by the second surface 142 results substantially parallel to the front plane PA. In other words, the angle formed between the first and second plane defined by cap element 140 is equal to α. In this case, therefore, the coupling elements and/or counter-elements 121,122 could have also all the same height, because they are not necessary to form the "tilt", however coupling elements 121 and/or coupling counter-elements 122 with different heights allow a better coupling of components lying on different planes.

As mentioned above, the door assembly 10; 110 further includes the handle 31; 131 so that it can be moved from an open to a closed position and vice-versa. The handle 31; 131 is coupled to a handle-carrying element 30; 130 which carries the handle 31; 131. The handle-carrying element 30; 130 is positioned, e.g., partially sandwiched, between the front 6; 106 and rear frame 5; 105 of door assembly 10; 110. Preferably, the handle-carrying element defines an outer edge 32; 132 which is sandwiched between the front 6; 106 and the rear frame 5; 105. The handle-carrying element 30; 130 is so construed that relative movements between the handle 31; 131 and the element 30; 130 are not possible, i.e., handle 31; 131 is firmly fixed on handle-carrying element 30; 130.

Preferably, handle 31; 131 has an elongated shape defining a first and a second distal ends 31a, 31b; 131a, 131b.

Handle 31; 131 preferably belongs to a system which may be named "pull-to-open" door opening system: the door assembly 10; 110 is provided with a latch, and the casing 7; 107, preferably front wall 2; 102, is provided with a latch retaining mechanism that includes a

mobile part which is configured to be movable between a retaining position, in which it engages the latch so as to retain the door assembly in the closed condition, and an opening position in which it releases the latch so as to allow the opening of the door assembly. The mobile part of the latch allows the releasing of the latch when a releasing force is applied which is greater than a threshold force, as better described below. The door assembly is therefore opened by pulling it outwards with enough force, and can also be opened by pushing it from the inside of the treatment chamber 3; 103.

The handle 31; 131 of the door assembly 10; 110 has only the function of providing a grip to the user, and it is fixed to the frame of door assembly via the handle-carrying element 30; 130.

Preferably, the handle-carrying element 30; 130 does not change the angle between the front frame PA and the closure frame PB; in other words it is not responsible for tilting any part of the front frame with respect to the rear frame or vice-versa. Therefore, the insertion of the handle-carrying element 30; 130 between the front 6; 106 and rear frame 5; 105 does not modify the angle formed between the above defined closure and front frame. The outer edge 32; 132 of handle-carrying element 30; 130 has thus preferably substantially an uniform thickness.

As visible in the drawings, both door assembly 10 and 110 includes a front frame 6; 106 defining an internal opening 9; 109. Preferably handle 31; 131 is located at the aperture 9; 109, and it extends in a radially inward direction from the inner edge 9a; 109a of the aperture 9; 109.

Preferably, the door assembly of the invention is reversible, i.e., door assembly 10; 110 can be mounted in a right-hand configuration or in a left-hand configuration.

With reference to figs. 3, 5, 6 and 7, the handle-carrying element 31 of door assembly 10 includes a plate-like member 33, substantially disc-shaped, the outer edge 32 of which is sandwiched between the front 6 and rear frame 5. The plate-like member 33 is substantially a single element realized integral to the handle 31. The handle is realized at the outer edge 32 of the plate-like member 33, protruding in a radially outward direction from the outer edge 32 and defining a radial protuberance of plate-like member 33. The plate-like member, when the door assembly is in an assembled configuration as depicted in fig. 3, covers completely aperture 9. Preferably, the diameter of plate-like member 33 is substantially identical to the diameter of aperture 9. Plate like member 33 includes a

surface 33a which results visible from the exterior of casing 7, when door assembly 10 is in an assembled configuration and closed on casing 7, and which is adjacent to the front surface 6a of door assembly 10. Preferably, surface 33a is substantially flush with front surface 6a of front frame 6. Handle 31 results visible from the outside of casing 7 and it includes a recess 34, which is best visible in fig. 5 where the door is sectioned along a plane sectioning also the handle 31 (figure 5 is the section along line B-B of fig. 3). The recess 34 is a recess in the surface 33a at the edge 32 and it extends underneath the front frame, so that the front frame itself forms a gripping element for the user's fingers when he/she introduces the hand in the recess 34 in order to open the door assembly 10. Thus, the handle 31 is partly formed by the plate-like member 33 and partly by the front frame 6, that is to say, by a cooperation of the two.

Handle-carrying element 30 is preferably realized in plastic material.

Handle-carrying element 30 is preferably coupled directly to front frame 6. The plate like member 33 thus further includes, extending from its edge 32, an annular flange 36, substantially perpendicular to the plate-like member 33. A terminal end of annular flange 36, or at least of portions of the terminal end of annular flange 36, is folded in itself, defining a seat 37 formed by parallel walls defined by the annular flange's fold.

In order to couple the handle-carrying element 30 on the front frame, the front frame 6, in its rear surface 6b, includes also a protruding flange 39 which is insertable or inserted in seat 37, preferably with interference. The coupling between the flange 39 and seat 37 is clearly visible in fig. 5. Protruding flange 39 preferably extends from the rear surface 6b of front frame 6 substantially perpendicularly to the rear surface itself. When handle-carrying element 30 is mounted on front frame 6, protruding flange 39 and annular flange 36 are substantially parallel at least for a portion.

Protruding flange 39, which is to be inserted in seat 37, is interrupted in at least four locations, by four different C-shaped wall members 38 mating the boundary external contour of the handle 31. Thus flange 39 is separated in at least four different portions.

During the assembly, handle-carrying element 30 is inserted in the aperture 9, the annular flange 36 being in contact to the edge 9a of the aperture 9 and to the flange 39. The insertion terminates when flange 39 reaches the bottom of seat 37. Seat 37 and flange 39 are so dimensioned that the outer surface 33a results flush with the front surface 6a of front frame 6.

At the same time, handle 31 is inserted within one of the C-shaped wall members 38, as better described below. At the two distal ends of each C-shaped wall member 38, from where flange 39 departs, two coupling elements 21 are positioned, one coupling element at each end. Thus, when the handle 31 is mounted on front frame 6, each of the two distal ends 31a, 31b of the handle 31 is located substantially adjacent to a coupling element 21 (see fig. 6).

With now reference to figs. 15, 16, 19a and 20a, the handle-carrying element 130 of door assembly 110 includes a ring-like member 133, the outer edge 132 of which is sandwiched between the front 106 and rear frame 105. The handle-carrying element 130 has a central aperture 134, preferably having the same shape as the apertures 108 and 109, so that a good aesthetic appearance is obtained. The ring-like member 133 is substantially a single element realized integral to the handle 131. The handle is realized at an inner edge 134a of the aperture 134 of ring-like member 133, in other words, handle 131 includes a portion of aperture's edge 134a and it protrudes in a radially inward direction from the latter. The aperture 134 of ring-like member 133, when the door assembly 110 is in an assembled configuration as depicted in fig. 19a, overlaps apertures 109, 108. Ring- like member 133 includes a portion, preferably a ring portion 138 (see figures 19a and 20a) around the inner edge 134a of aperture 134, which results visible from the exterior of casing 107 and which form a portion of the outer surface of door assembly 110. Preferably, the visible ring portion 138 is substantially flush with front surface 106a of front frame 106. Handle 131 results visible from the outside of casing 107 and it includes a flap element 135 connected to the visible ring portion 138 and extending toward the center of aperture 134.

Ring-like member 133 further includes flat appendices, for example in the number of four, all indicated with 139, which protrudes in a radially outward direction from the outer edge 132 of ring-like member 133. Preferably, the appendices 139 are angularly spaced one from the others with a fixed spacing. Each flat appendix 139 includes a notch 137, having a shape and dimensions suitable to house a coupling element 121 and/or a coupling counter element 122. Referring back to figures 15 and16, flat appendices 139 are sandwiched between front 106 and rear frame 105.

Door assembly 10, 110 further comprises a hinge 60; 160, which is provided to pivot the door assembly 10; 110 to the casing 7; 107 so that it can be opened by rotating it about a hinge axis H, as shown in figs. 3, 5c, and 19a, 20a. Preferably, hinge 60; 160 is arranged across, and more preferably centered across, a horizontal median plane of the door

assembly 10; 110 substantially perpendicular to hinge axis H. The horizontal median plane defines center line C, which is an axis passing through the center of the front section of the door assembly. A vertical median plane V is also defined, as the plane parallel to the hinge or rotational axis H and passing through the geometrical center of the door assembly.

Preferably but not necessarily, hinge axis is parallel to the Z axis and centerline C is parallel to the (X,Y) plane, i.e. it is an horizontal axis.

Hinge 60; 160 may be any conventional hinge, preferably of the type that is not visible when the door assembly 10; 110 is closed. In the embodiment shown in the figures, hinge 60; 160 comprises a portion (not visible in the figures) fixed to the front wall 2; 102, a seat 62; 162 for housing it provided in the door assembly 10; 110, and a hinge pin 63; 163 extending in holes of the portion fixed to front wall and of the seat 62: 162.

In a washing machine, it is preferred to introduce an electromechanical lock (not all components of which are visible) is provided between the door assembly 10; 110 and the front wall 2; 102. The lock comprises a portion or first member fixed to the front wall 2; 102 and a portion or second, matching member fixed to the door assembly 10; 110 that cooperate with each other.

The lock is configured to avoid opening of the door assembly during operation of the laundry treatment device 1; 100; and to possibly to avoid operation of the device with the door assembly open, for example by issuing a consent signal to an electronic control unit of the device only when the door assembly is closed and/or delay opening of the door assembly after the end of an operation cycle. The electromechanical lock is therefore also an interlock.

Advantageously, the second member comprises a hook or latch 61; 161 protruding from the door assembly 10; 110 towards the casing 7; 107 and the first member comprises a latch retaining mechanism for receiving the hook or latch 61; 161, positioned at the casing 7; 107.

The latch retaining mechanism preferably includes, in a manner known *per se*, a mobile part which is configured to be movable between a retaining position, in which it engages the hook or latch 61; 161 so as to retain the door assembly 10; 110 in a closed condition, and an opening position it which it releases the hook or latch 61; 161 so as to allow the opening of the door assembly 10; 110. The mobile part of the latch retaining mechanism at

the front wall 2; 102 preferably interacts with an elastic element, for example a spring, which allows the releasing of the hook or latch 61; 161 when a releasing force is applied which is greater than a threshold force. The door assembly is therefore, as already mentioned, of the “pull-to-open type”, opened by applying a force beyond a threshold onto the door assembly 10; 110 away from the casing 7; 107.

The lock is preferably arranged across, and more preferably centered across, the horizontal centerline C of the door assembly 10; 110. Therefore, hinge 60; 161 and lock lie substantially on the same axis C.

In the door assembly 10, the hinge 60 and hook or latch 61 are mounted, in a releasable manner, to a cap element 40. In other words, cap member 40 includes seat 62 for the housing of the hinge 60 and an additional seat (not visible in the drawings) for the housing of the hook or latch 61 (see figs. 6 and 7). Cap element 40, visible in an enlarged view in fig. 8, is sandwiched between rear frame 5 and front frame 6 in correspondence of its edge 47 and it covers at least in part the aperture 9 realized in the front frame. Cap element 40 is covered by handle-carrying element 30, which covers aperture 9 completely, when the door assembly 10 is in an assembled configuration, therefore it is not visible from the outside, with the exception of part of hinge 60 and latch 61 which have to be mounted on or cooperate with casing 7.

Further, in proximity of its edge 47, cap element 40 includes a first and a second plurality of through holes 44 and 48 through which coupling elements 21 and centering- elements 23 can pass. Coupling elements 21 and centering elements 23, when inserted in holes 44 and 48, respectively, avoids any rotation of cap element 40.

From each through-hole 44 also a tubular mantel may depart, in order to firmly house the inserted coupling element 21.

Cap element 40 does not change the inclination present between the front plane PA and the closure plane PB, in other words the angle between these two planes is unchanged with or without the presence of cap element 40.

Advantageously, cap element 40 includes a strengthening member 46, substantially centrally located, which reinforces front frame 6 and in particular handle-carrying element 30. As better visible in the sections of figs. 4 and 5, a large gap is present within door assembly 10 in an assembled configuration between bowl-shaped element 80 and the

plate-like member 33 of handle-carrying element 30. The presence of a central strengthening member 46 of cap element 40, for example in the shape of a hollow cylinder, avoids that pressure applied on plate-like member 33 could break the latter.

In figure 8, cap element 40 is shown mounted on rear frame 5. The centering-elements 23 protruding from rear surface 5b of rear frame 5 are inserted into through holes 48 and protrude from the latter. The different heights of centering-elements 23 are visible, being the thickness of cap element 40 substantially constant.

In the embodiment of door assembly 110, hinge 160 and hook or latch 161 are mounted, in a reversible manner, on rear frame 105, at the edge of the same, where the seat 162 is formed.

The handle 31; 131, when door assembly 10; 110 is in an assembled configuration, is provided at a location which is not aligned or not corresponding with the position of the lock, e.g., hook or latch 61; 161 and of handle 60; 160. The handle 31; 131 is arranged outside the horizontal median plane C of the door assembly 10; 110. The handle 31; 131 is thus offset with respect to hinge 60; 160 and the lock. In case of a large extent of the handle 31; 131 and/or of the lock and/or of the hinge, hinge and handle and/or hinge and lock might however overlap in part.

According to the invention, the handle-carrying element 30; 130 can be positioned between the front 6; 106 and rear frame 5; 105 at least in two different positions and more preferably in at least four different positions. The difference between one position and the other lies in the handle location: for each position of the handle-carrying element 30; 130 a different location L1, L2, L3, L4 of the handle 31; 131 within the frame is achieved.

Although reference will be made in the following to the door assembly 110, depicted in figures 19a-19c and 20a-20c, the same description – unless otherwise specified - is applicable also to door assembly 10.

In the case shown in figures 19a to 19c, the door assembly 110 is in a left-hand configuration being hinged at its left (as viewed from the front of the laundry treatment device 100 when the door assembly 110 is closed), i.e., the rotation axis, or hinge axis, H is on the left side of the door assembly. The hinge 160 is advantageously centered across a position at 9 o'clock or 180° in a conventional angular reference system (see figure 19a), and the latch 161 is across a position at 3 o'clock or 0° in the same reference system (see

figure 19c which is the rear view of the door assembly 110 of fig. 19a). The reference system is defined by centerline C and vertical centerline V, parallel to hinge axis H. The axes C and V of door assembly 110 are also indicated in figs. 19a and 20a to easily identify four quadrants.

In figures 19a-19c, handle 131 is shown arranged in the first quadrant, i.e., between 0° and 90°. Advantageously, the handle 131 extends for an arc or circumference lying in the generally central portion of the first quadrant. This position is indicated with “L1”.

In case the laundry treatment device 100 is to be arranged on top of another equipment or piece of furniture, like in the case of a dryer machine arranged on top of a washing machine, the handle 131 may be arranged in the fourth quadrant, i.e. between 270° and 360°, as shown in fig. 19a with a dotted line. This position is called “L2”.

Preferably, position L2 corresponds to the reflection of the position L1 of handle 131 across the centerline C.

In case the door assembly 110 is in a right-hand configuration, i.e. it is hinged at its right, as for example depicted in figs. 20a-20c, and the device 100 is arranged on top of another equipment or piece of furniture, then the handle 131 may be arranged in the third quadrant, i.e. between 180° and 270° as shown in fig. 20a. This is position “L3”.

Finally, in case the door assembly 110 is hinged at its right, and arranged on the floor, as shown in fig. 20a with a dotted line, then the handle 131 may be arranged in the second quadrant, i.e. between 90° and 180°. This is the position “L4”.

Preferably, position L4 corresponds to the reflection of the position L3 of handle 131 across the centerline C.

Furthermore, preferably position L4 corresponds to the reflection of the position L1 of handle 131 across the vertical centerline V. Analogously, position L3 corresponds to the reflection of the position L2 of handle 131 across the vertical centerline V.

Moreover, in all four cases the handle 131 and hook or latch 161 are arranged such that, when the door assembly is closed, they are located at angular positions that are reciprocally spaced by less than 90°. On the contrary, hinge 160 and handle 131 are arranged such that, when the door assembly is closed, they are located at angular

positions that are reciprocally spaced by more than 90°. As the position of hinge, handle, latch, etc., the position of their center of mass is considered.

The assembly of the door assembly 10 takes place as follows.

On cap element 40, hinge 60 and latch or hook 61 are attached.

The cap element 40 is positioned on door frame 5 in such a way that the centering elements 23 are inserted into through-holes 48 of the cap element 40 and the through-holes 44 are aligned with the through-holes defined by the coupling counter-elements 22. Suitable recesses or openings are realized in the edge of rear door frame 5 so that the hinge 60 and the latch or hook 61 can protrude rearward outside the door assembly 10.

Handle-carrying element 30 is inserted into opening 9 of front door frame 6, till the flange 39 abuts onto the bottom of seat 37. The handle 31 is positioned within one of the C-shaped wall members 38 which substantially defines a seat for the handle 31 itself. C-shaped wall members 38 are formed at locations L1, L2, L3, and L4 for handle 31. The C-shaped wall member 38 is chosen among the four available ones according to the desired location of handle 31 to be achieved in the assembled door assembly 10.

Front frame 6 including handle-carrying element 30 is then mounted on rear frame 5 including cap element 40 and fastened inserting the coupling elements 21 first into the through holes 44 in cap element 40 and then into the coupling counter elements 22 in rear frame 5, by the application of pressure.

The centering-elements 23 are so located to substantially abut against the terminal end of flange 36, in other words against seat 37, so as to keep the seat 37 pressed against flange 39 of the front frame 5 and avoid possible expulsion of the latter. The centering elements 23 define, by means of their free ends, a plane which is tilted with respect to the closure plane, due to their different heights. More preferably this plane is parallel, even more preferably is coinciding to the handle plane. Therefore, when the door assembly is in an assembled configuration, the free ends of centering elements 23 define the plane on which the handle-carrying element 30 should lay. In this way, movements of the handle-carrying element 30 towards or away the front frame 6, thus movements of the handle plane, are avoided, because an abutment is present of the centering elements 23 against flange 36 for all the angular extension of the latter.

Additional fastening elements might be present to fix the front 6 and rear door frame 5 together, such as screws and bolts or snap-fit elements. For example, screws 25 are inserted into through holes defined by the coupling counter-elements 22 from the rear surface 5b of rear frame 5 and screwed into the tubular elements 91 of coupling elements 21.

In an assembled configuration of door assembly 10, rear door frame 5 and cap element 40 lie on planes substantially parallel to closure plane PB, while front door frame and handle-carrying element 30 are substantially lying, at least on one side, on the front plane PA.

The meaning of lying on a plane is the following. Rear door frame 5 has two opposite surfaces 5a and 5b. Surface 5b defines closure plane PB. Surface 5a also defines a plane; the portion of surface 5a to be considered for the definition of the plane is the one which is in abutment against the "neighbouring" component of the door assembly 10, in this case cap element 40. This portion of surface 5a is planar and defines a plane which is parallel to the closure plane, due to the front frame layout. A component lying on such a plane defined by surface 5a is also, as far as the surface of the component lying on such a plane is concerned, parallel to the closure plane. Cap element 40, in the same way, defines two opposite surfaces forming two opposite planes. Cap element 40 is so construed that these two opposite surfaces and planes are parallel to each other and thus result parallel to closure plane PB, due to the fact that cap element 40 is in abutment against front surface 5a of rear frame 5 which defines a plane parallel to PB.

Conversely, being the handle-carrying element 30 mounted directly onto the front door frame 6 which defines a front plane which is "tilted" with respect to the closure plane PB due to the different heights of coupling elements 21, it lies on a tilted plane with respect to the closure plane as well. Being the top-most element(s) 21 the shortest, the front door frame 6 is in the top-most position closer to the closure plane PB than in the lower-most position, where the element(s) 21 is the longest, so the front door frame in this position is the farthest from the closure plane PB.

The front frame 6 defines the front plane PA by means of front surface 6a. Rear surface 6b defines a plane as well, for example parallel to PA. Therefore any component abutting on such a plane remains, at least for the surface in abutment, parallel to PA. Being the handle-carrying element 30 mounted on the front frame 6, it is also parallel to the front plane PA.

However, the handle-carrying element 30 can define, by means of one of its opposite surfaces, a plane, called handle plane PH, which can be tilted with respect to the closure plane of a different angle than the angle α present between the front plane PA and the closure plane PB. In this case, a further angle or tilt has to be realized between the front frame 6 and the handle-carrying element 30, i.e. between the front plane PA and handle plane PH.

In an assembled configuration, rotations of the cap element 40 are avoided due to the anti-rotational function of the coupling elements 21 inserted in the trough holes 44 and of the centering elements 23 inserted into the through holes 48. Rotations of the handle-carrying element 30 are avoided as well due to the shape-mating of the handle 31 and the C-shaped wall member 38 and to the presence of a coupling element 21 at each distal end 31a, 31b of the handle 31.

In case it is desired that the door assembly 10 is reversed, for example from a left-hand door assembly to a right-hand door assembly, the location of the handle 31 has to move from the location indicated with L1 in figure 19a (although these figures refers to door assembly 110, the possible locations of the handle are applicable to door assembly 10 as well) to the location indicated with L4 in figure 20a. In order to achieve the reversibility, the front 6 and rear frame 5 have to be released one from the other. The front and rear frame 6,5 can be completely detached or simply a gap can be formed therebetween, without a complete separation of the two elements.

The cap element 40, which is carrying the hinge 60 and latch or hook 61, is rotated by 180° so that the position of the hinge and latch or hook are exchanged. The rotation of the cap element 40 takes place on a plane parallel to the closure plane PB.

It is to be understood that further movements of the cap element 40, not only a rotation, might be necessary as well, such as a translation of the same to disengage coupling elements 21 and centering elements 23 from through holes 44 and 48. However the final rotated configuration represents a rotation of 180° of the starting configuration on a plane parallel to PB.

Cap element 40 is then inserted again into centering-elements 23.

The handle-carrying element 30 is then also rotated, but of an angle smaller than 180°: it has to be rotated of the angle present between location L1 and L4. This rotation takes

place on a plane which is the handle plane PH, tilted with respect to the closure plane and preferably parallel to the front plane PA.

The fact that the rotation takes place on the handle plane HA, means that both locations L1 and L4 lie on the same plane PH, using the same reasoning as in the rotation of cap element 40. Other movements of handle-carrying element might be necessary as well, as above described.

Front and rear frame 6, 5 are then fastened again one on the other, inserting the coupling elements into the holes 44 and coupling counter-elements 22, and finally screws 25 are inserted in the holes defined by coupling counter-elements 22 and screwed in tubular elements 91

Similarly, in case a change from a right-hand door assembly to a left-hand door assembly is desired, handle 31 has to be moved, in the same manner above described, from location L3 to location L2.

Alternatively, in case no reversibility of door assembly 10 is requested, which remains in a left-hand configuration, but the laundry treatment device 1 changes position from a floor-positioned device with handle 31 in position L1 to an “elevated” position, the handle 31 from location L1 preferably is to be moved to location L2 in order to be more easily accessible to the user.

As above, the front 6 and rear frame 5 have to be released one from the other. The front and rear frame 6, 5 can be completely detached or simply a gap can be formed therebetween.

No movement is requested to the cap element 40. On the contrary, the handle-carrying element 30 is rotated, again of an angle smaller than 180°: it has to be rotated of the angle present between location L1 and L2. This rotation takes place on a plane which is the handle plane PH, tilted with respect to the closure plane and preferably parallel to the front plane PA. The meaning of a rotation on plane PH is the same as above.

Front and rear frame 6, 5 are then fastened again one on the other.

Similarly, changing from a floor position to an elevated position a device 1 having a left-hand door assembly configuration, handle 31 has to be moved from location L3 to location L4.

Door assembly 10 is then hinged on front wall 2. Due to the tilt present between the front plane PA and the closure plane PB, the front surface 6a defining the front plane matches with the portion of front surface 2a of front wall 2 in which opening 4 is formed. Indeed, preferably such front surface 2a, around opening 4, is tilted as well.

The assembly of the door assembly 110 is performed in the following way.

On rear frame 105, hinge 160 and latch or hook 161 are attached.

The glass door 180 is then inserted in aperture 108 till flange 181 is in abutment against the front surface 105a of the rear frame 5. On top of the glass door 180, the cap element 140 is positioned, putting the first surface 141 of cap element 140 into contact to the flange 181. Preferably both glass door 180 and cap element 140 include an outer edge the dimensions of which are such that it is insertable within the contour defined by the coupling counter-elements 122 protruding from front surface 105a of rear frame 105. Additionally, preferably both glass door 180 and cap element 140 includes anti-rotational means, for example protrusions extending radially from their respective outer edges, to avoid rotations of the glass door and/or cap element.

Handle-carrying element 130 is put into abutment against the second surface 142 of cap element with the handle 31 in the desired angular location among the available possibilities, such as L1, L2, L3 and L4. Notches 137 prevent further rotations of the handle-carrying element 130 after assembly due to the presence within each notch 137 of a coupling element 121 or counter-element 122.

The first element 170 of front frame 106 is then mounted on rear frame 105, on top of handle-carrying element 130. Cover ring 150 is then positioned on top of the first member 170 so that the coupling elements 121 are inserted into through holes 171, in appendices 190a of the first element 170 and then into coupling counter-elements 122, fastening the front and rear frame together.

The free end of appendices 190a abuts against the free end of sleeves 191 of coupling counter-elements 122.

Additional fastening elements might be present to fix the front 106 and rear door frame 105 together, such as screws and bolts or snap-fit elements. For example, screws 125 are inserted into through holes defined by the coupling counter-elements 122 from the rear

surface 105b of rear frame 105 and screwed into the tubular elements 191 of coupling elements 121 and coupling counter elements 122.

Rear door frame 105, glass door 180 and one surface, the first surface 141, of cap element 140 lie on planes substantially parallel to closure plane PB, while front door frame 106 and handle-carrying element 130 are substantially lying on the front plane PA, being the handle-carrying element 130 abutting onto the second surface 142 of the cap element 140 which is “tilted” with respect to the rear door frame 105. The tilt is determined by the difference in the heights of ridge 143.

The meaning of “lying on a plane” is the same as described in the previous embodiment with reference to door assembly 10.

However, the handle-carrying element 130 can define, by means of one of its opposite surfaces, a plane, called handle plane PH, which can be tilted with respect to the closure plane of a different angle than the angle α present between the front plane PA and the closure plane PB. In this case, a further angle or tilt has to be realized between the front frame 6 and the handle-carrying element 130, i.e. between the front plane PA and handle plane PH.

In case it is desired that the door assembly 110 is reversed, for example from a left-hand door assembly to a right-hand door assembly, the location of the handle 131 has to move from the location indicated with L1 in figure 19a to the location indicated with L4 in figure 20a. In order to achieve the reversibility, the front and rear frame have to be released one from the other. The front and rear frame 106,105 can be completely detached or simply a gap can be formed therebetween.

The rear frame 105 which is carrying the hinge 160 and latch or hook 161 is rotated by 180° so that the position of the hinge and latch or hook are exchanged. The rotation of the rear frame 105 takes place on a plane parallel to the closure plane PB.

The handle-carrying element 130 is then also rotated, but of an angle smaller than 180°: it has to be rotated of the angle present between location L1 and L4. This rotation takes place on a plane which is the handle plane PH, tilted with respect to the closure plane and preferably parallel to the front plane PA.

It is to be understood that further movements of the handle-carrying element 130, not only a rotation, might be necessary as well, such as a translation of the same to disengage

coupling elements 121 and/or coupling counter-elements 122 from notches 137. However the final rotated configuration represents a rotation of the starting configuration on a plane parallel to PB.

The fact that the rotation takes place on the handle plane PH, means that both locations L1 and L4 lie on the same plane PH.

Front and rear frame 106,105 are then fastened again one on the other as already described.

Similarly, in case a change from a right-hand door assembly to a left-hand door assembly is desired, handle 131 has to be moved, in the same manner above described, from location L3 to location L2.

Alternatively, in case no reversibility is requested, but the laundry treatment device 100 changes position from a floor-positioned device with handle in position L1 to an “elevated” position, the handle from location L1 preferably moves to location L2 in order to be more easily accessible to the user.

As above, the front and rear frame have to be released one from the other. The front and rear frame 106,105 can be completely detached or simply a gap can be formed therebetween,

No movement is requested to the rear frame 105. On the contrary, the handle-carrying element 130 is rotated, again of an angle smaller than 180°: it has to be rotated of the angle present between location L1 and L2. This rotation takes place on a plane which is the handle plane PH, tilted with respect to the closure plane and preferably parallel to the front plane PA.

Front and rear frame 106, 105 are then fastened again one on the other.

Similarly, changing from a floor position to an elevated position a device 100 having a left-hand door assembly configuration, handle 131 has to be moved from location L3 to location L4.

Door assembly 110 is then hinged on front wall 102. Due to the tilt present between the front plane PA and the closure plane PB, the front surface 106a defining the front plane matches with the portion of front surface 102a of front wall 102 in which opening 104 is formed. Indeed, preferably such front surface 102a, around opening 104, is tilted as well.

Although not visible in the drawings, in both door assemblies 10, 110, locating elements can be provided, to avoid that in a left-hand door configuration locations L3 or L4 are selected, and similarly, in a right-hand configuration, to avoid that locations L1 or L2 are selected by the user.

Claims

1. A door assembly (10; 110) for a laundry treatment device (1,100), apt to open or close an opening (4; 104) defined in said laundry treatment device, said door assembly comprising a frame (5, 6; 105, 106), said frame including:

   - a front door frame (6; 106) forming a front surface (6a; 106a) of the door assembly, said front surface defining a front plane (PA), said front door frame (6;106) comprising a plurality of coupling elements (21; 121) for the coupling to a rear door frame; and

   - the rear door frame (5; 105) forming a rear surface (5b; 105b) of said door assembly, said rear surface defining a closure plane (PB) apt to abut against the opening formed in said laundry treatment device, said rear door frame (5;105) including a plurality of coupling counter-elements (22; 122) engaging with said coupling elements (21; 121) of said front door frame;

   - wherein said coupling elements (21; 121) extend from a rear surface (6b; 106b) of said front door frame opposite to said front surface and/or said coupling counter-elements (22; 122) extend from a front surface (5a; 105a) of said rear door frame opposite to said rear surface; and

   - wherein a first height (D2) of a first one of said coupling elements from said rear surface (6b; 106b) of said front door frame (6; 106) is higher than a second height (D1) of a second one of said coupling elements (21; 121) from said rear surface of said front door frame, or a first height (D2) of a first one of said coupling counter-elements (22; 122) from said front surface (5a; 105a) of said rear door frame (5; 105) is higher than a second height (D1) of a second one of said coupling counter-elements from said front surface of said rear door frame, so that said front plane (PA) and said closure plane (PB) are intersecting one the other forming an angle different from 0° and 180°.

2. The door assembly (10; 110) according to claim 1, wherein said frame (5, 6; 105, 106) defines an outer perimeter edge (11; 111), said outer perimeter edge having a first outer perimeter edge portion and a second outer perimeter edge portion

opposite to the first outer perimeter edge portion with respect to an axis of said frame, and said frame has a first thickness (T1) at said first edge portion and a second thickness (T2) at said second edge portion, the first thickness being different from the second thickness.

3. The door assembly (10; 110) according to claim 1 or 2, wherein said coupling elements (21; 121) and/or coupling counter-elements (22; 122) include appendices (90; 190) departing from said rear (6b; 106b) and/or from said front surface (5a; 105a) of said front (6; 106) and/or rear door frame (5; 105), respectively.

4. The door assembly (10; 110) according to any of the preceding claims, wherein said coupling elements (21; 121) and/or coupling counter-elements (22; 122) are arranged around said front and/or rear door frame angularly spaced one from the other.

5. The door assembly (10; 110) according to claim 4, wherein the height of said coupling elements (21; 121) and/or coupling counter-elements (22; 122) gradually change moving from one coupling elements (21; 121) and/or coupling counter-elements (22; 122) to an angularly adjacent one.

6. The door assembly (10; 110) according to claim 4 or 5, wherein said coupling elements (21; 121) and/or coupling counter-elements (22; 122) are arranged around an outer edge (11; 111) of said door frame.

7. The door assembly (10; 110) according to any of the preceding claims, wherein one of said coupling elements (21; 121) and/or one of said coupling counter-elements (22; 122) includes a tubular sleeve (91; 191).

8. The door assembly (10; 110) according to any of the preceding claims, wherein a coupling element (21; 121) is inserted in a corresponding coupling counter-element (22; 122), or vice versa.

9. The door assembly (10; 110) according to any of the preceding claims, including a handle (31; 131) and a handle-carrying element (30; 130) interposed between said rear door frame (5; 105) and front door frame (6; 106), said handle being carried by said handle-carrying element, said handle-carrying element being apt to be mounted in said door assembly in a plurality of alternative positions, so that said handle can be positioned along said frame at different locations (L1; L2; L3; L4).

10. The door assembly (110) according to claim 9, wherein said coupling elements (121) and/or coupling counter elements (122) are so construed to function as anti-rotational element for said handle-carrying element (130) when said door assembly (110) is in an assembled configuration.

11. The door assembly (10; 110) according to any of the preceding claims, including a cap element (40; 140) interposed between said front door frame (6; 106) and said rear door frame (5; 105), and said front door frame and/or rear door frame further including a front and/or rear aperture (9; 108, 109), respectively, and said cap element (40; 140) covering at least partially said front and/or rear aperture.

12. The door assembly (10) according to claim 11, wherein said cap element (40) includes through-holes (44) for housing said coupling elements (21) and/or coupling counter-elements (22).

13. The door assembly (10; 110) according to claim 9, wherein a pair of coupling elements (21; 121) or a pair of coupling counter-elements (22; 122) is located substantially at two opposite distal ends (31a, 31b; 131a, 131b) of said handle (31; 131) for each possible handle location (L1; L2; L3; L4).

14. The door assembly (110) according to any of the preceding claims, wherein said front door frame (106) includes a front door opening (109) and a cover ring (150) having a cover ring opening (151), said cover ring being attached to said front door frame in such a way that said cover ring opening (109) substantially corresponds to said front door opening (109), said cover ring (150) including said plurality of coupling elements (21;121) for the coupling to said rear door frame (105).

15. A laundry treatment device (1; 100) comprising:

- a casing (7; 107) containing a treatment chamber (3; 103) for receiving load to be washed and/or dried;
- a front wall (2; 102) covering a side of said casing, said front wall including an opening (4; 104) for accessing said treatment chamber;
- a door assembly (10; 110) associated to said casing for opening and closing said opening (4; 104), said door assembly (10; 110) being formed according to one or more of claims from 1 to 14.

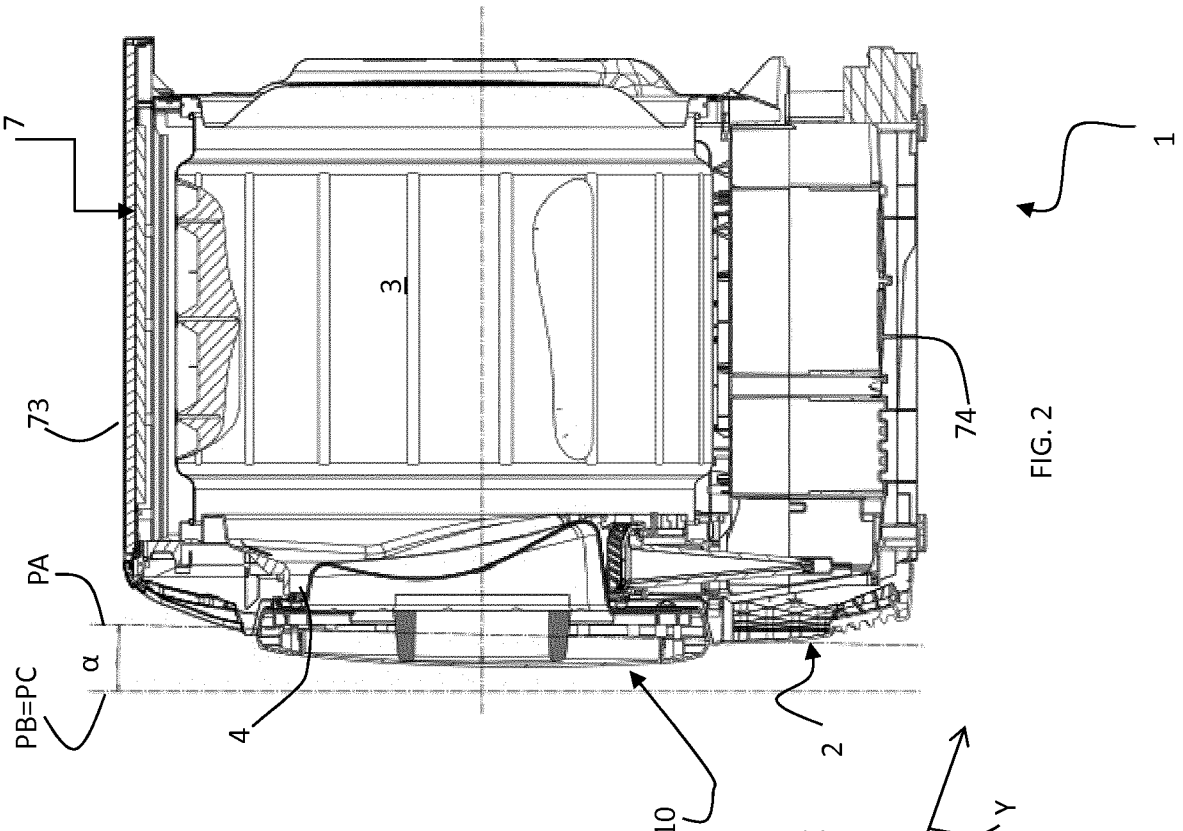
7
73
PA
α
PB=PC
4
10
2
3
74
1

FIG. 2

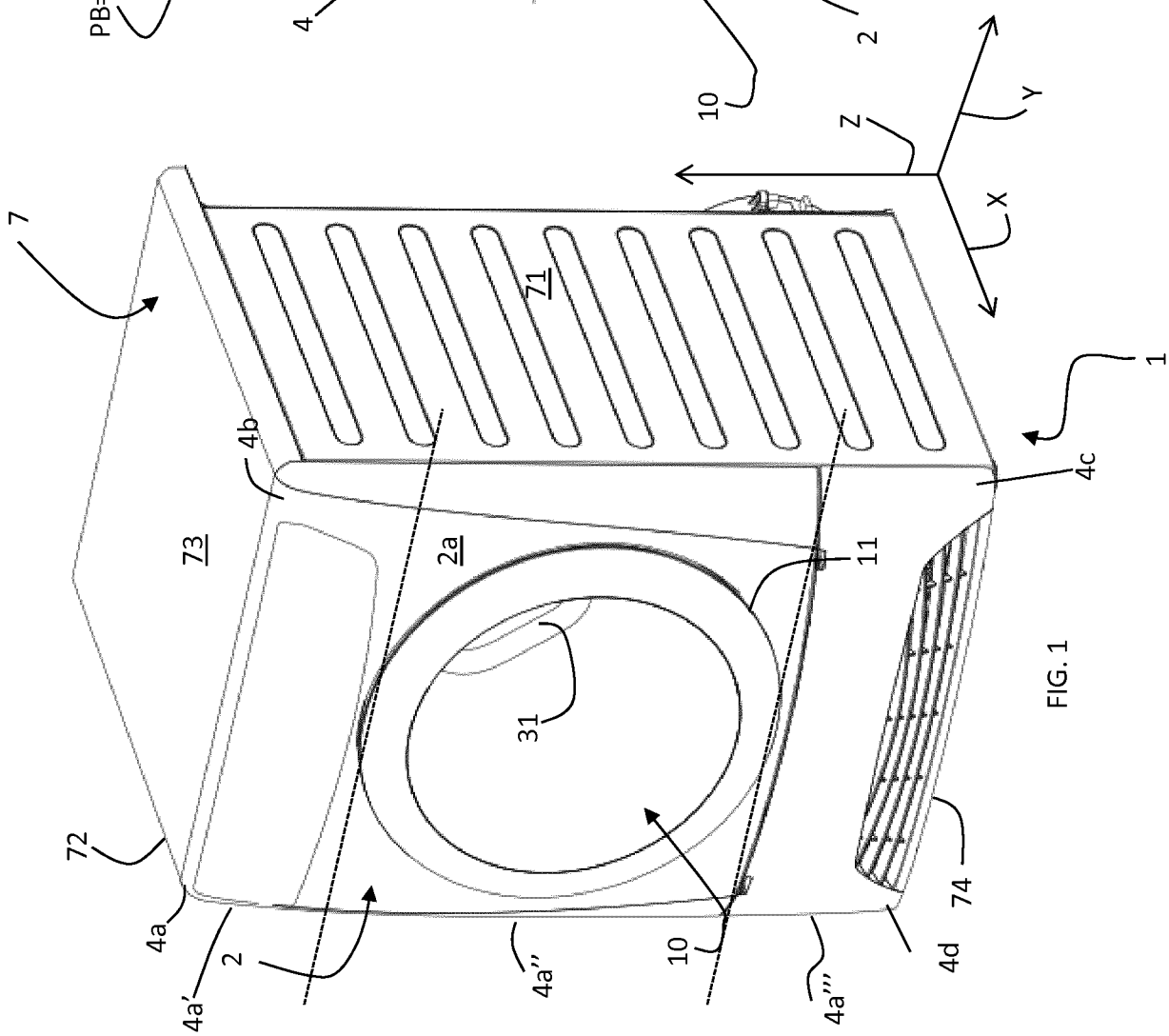
7
71
73
4b
2a
11
31
72
4a
4a'
2
4a''
10
4a'''
4d
74
4c
1
Z
Y
X

FIG. 1

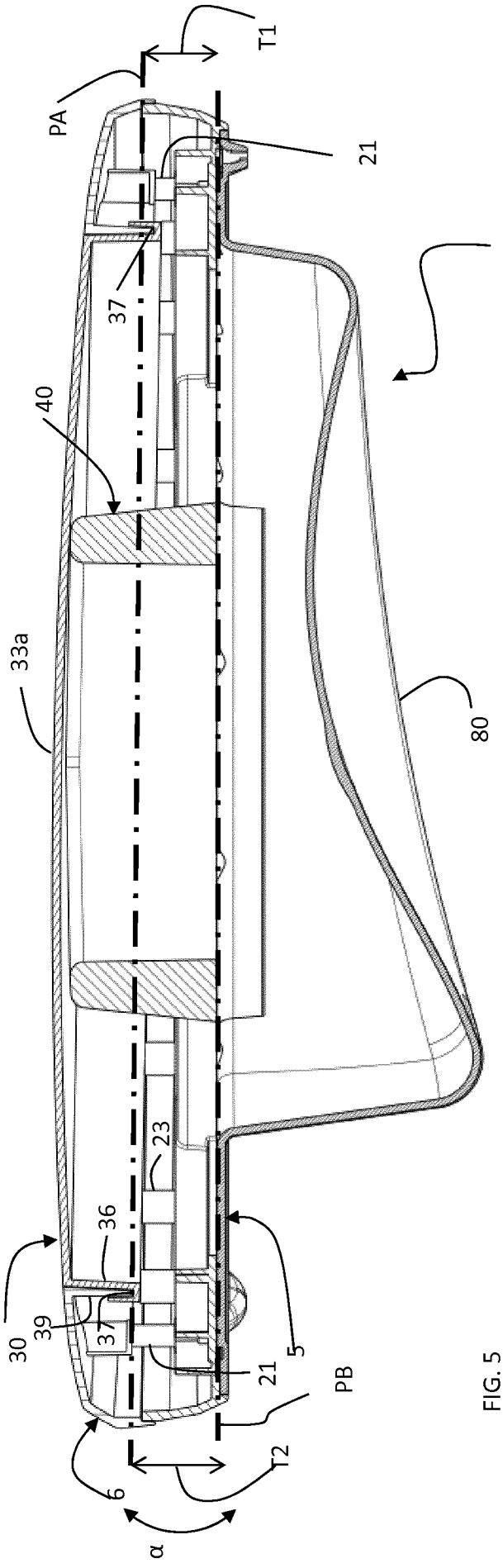
PA
T1
21
37
40
10
80
33a
23
36
30
39
37
21
5
PB
T2
6
α

FIG. 5

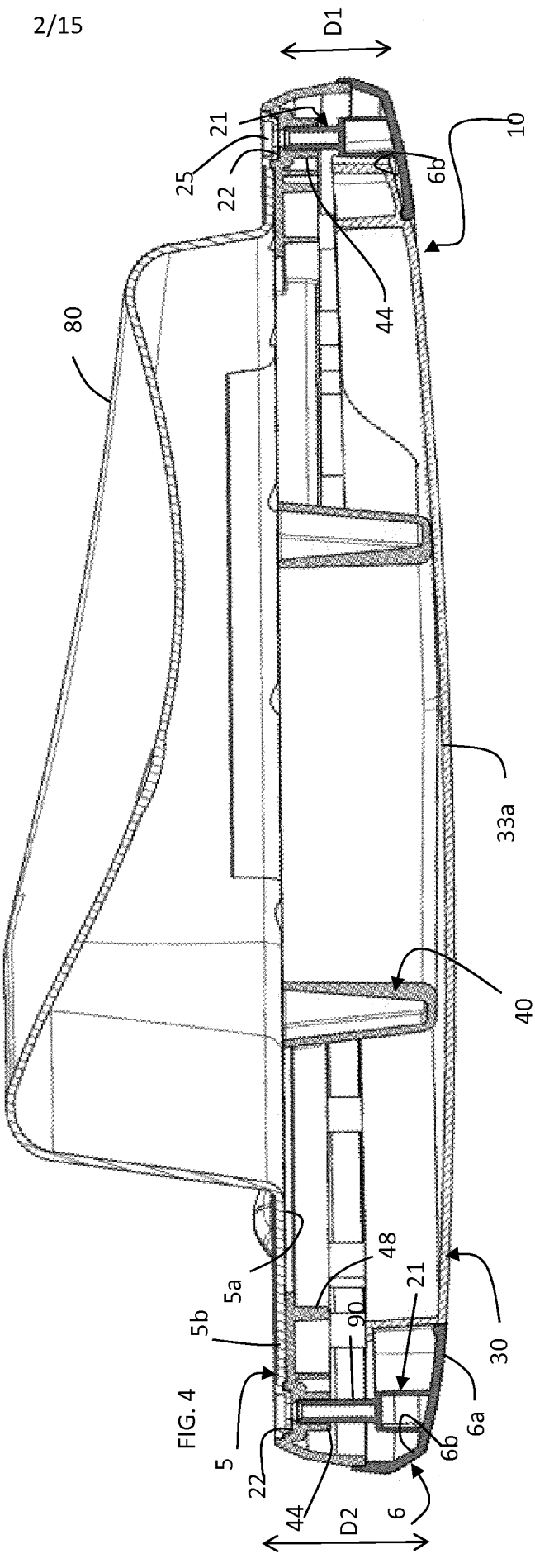
D1
21
25
22
6b
10
44
80
33a
40
48
5a
5b
90
21
30
5
22
44
D2
6
6b
6a

FIG. 4

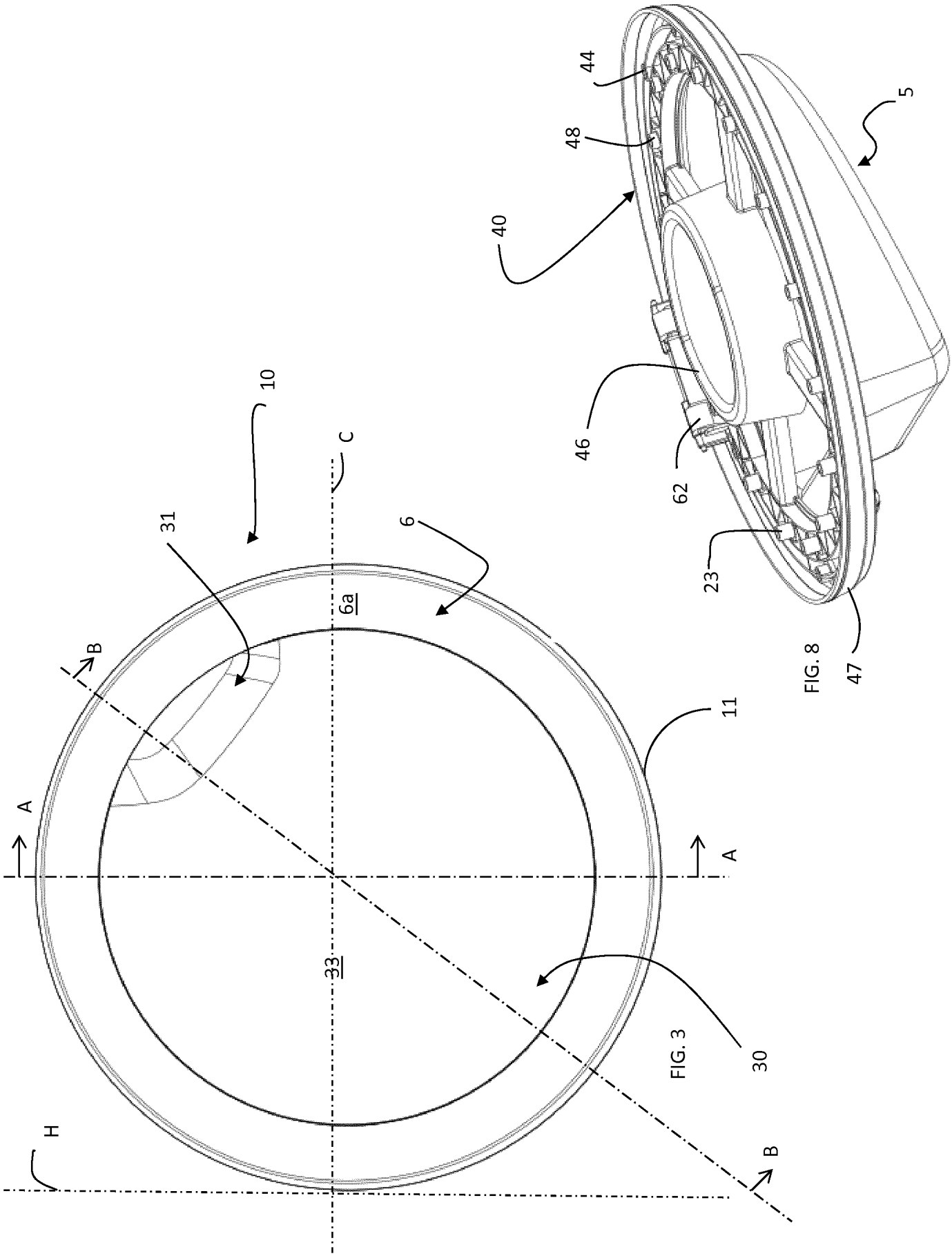

FIG. 3

FIG. 8

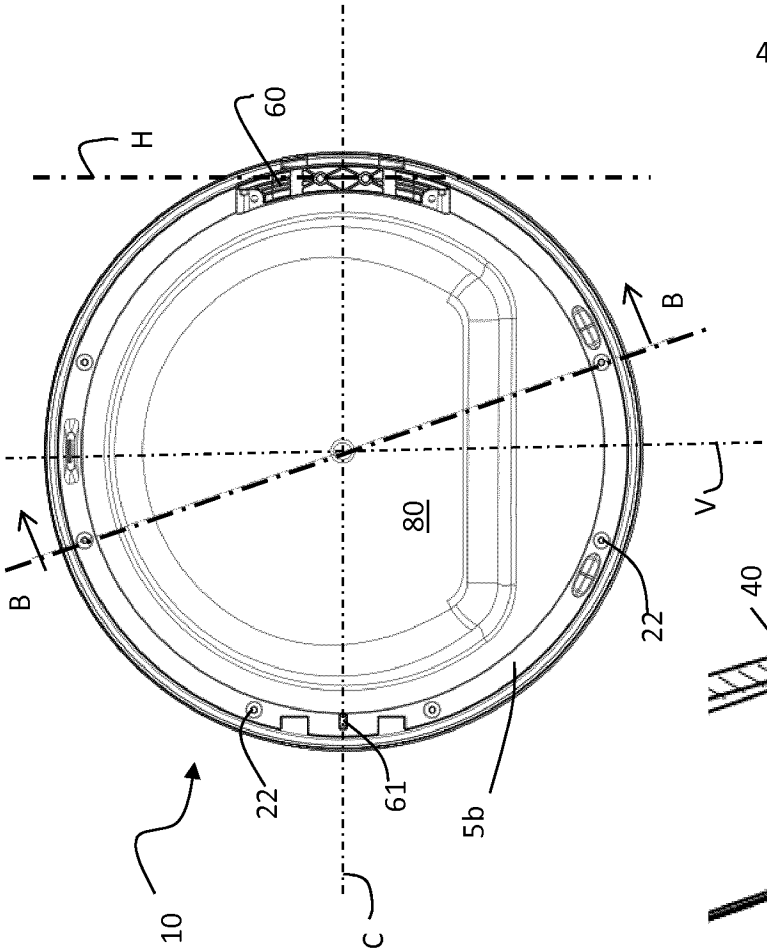

FIG. 5c

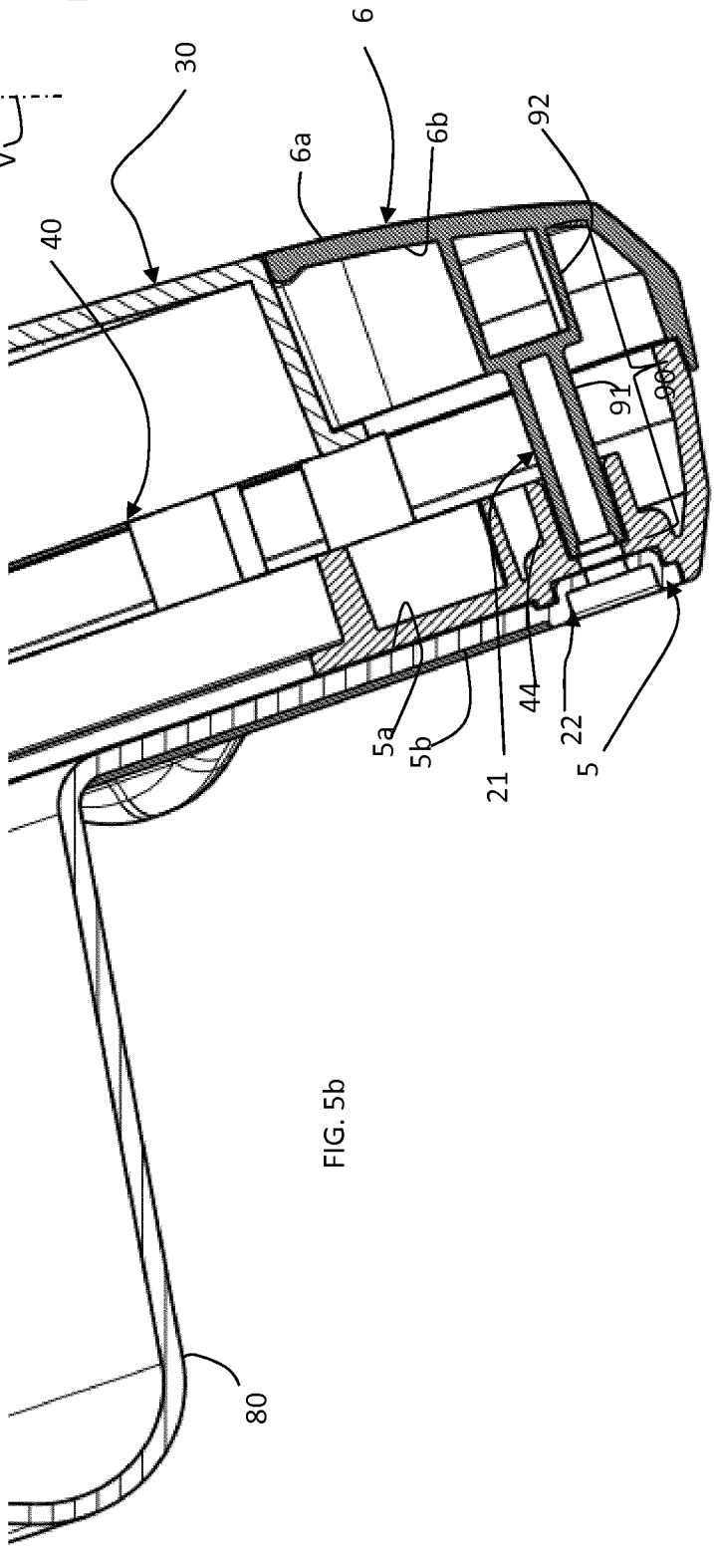

FIG. 5b

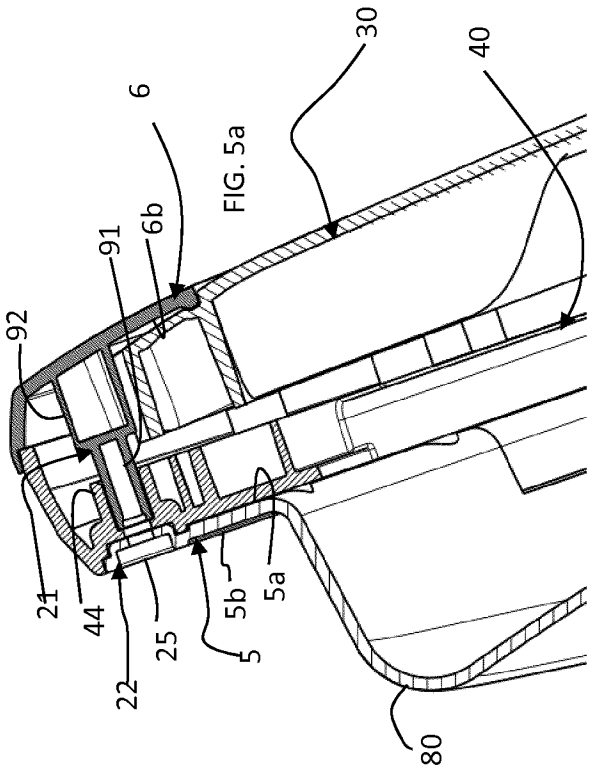

FIG. 5a

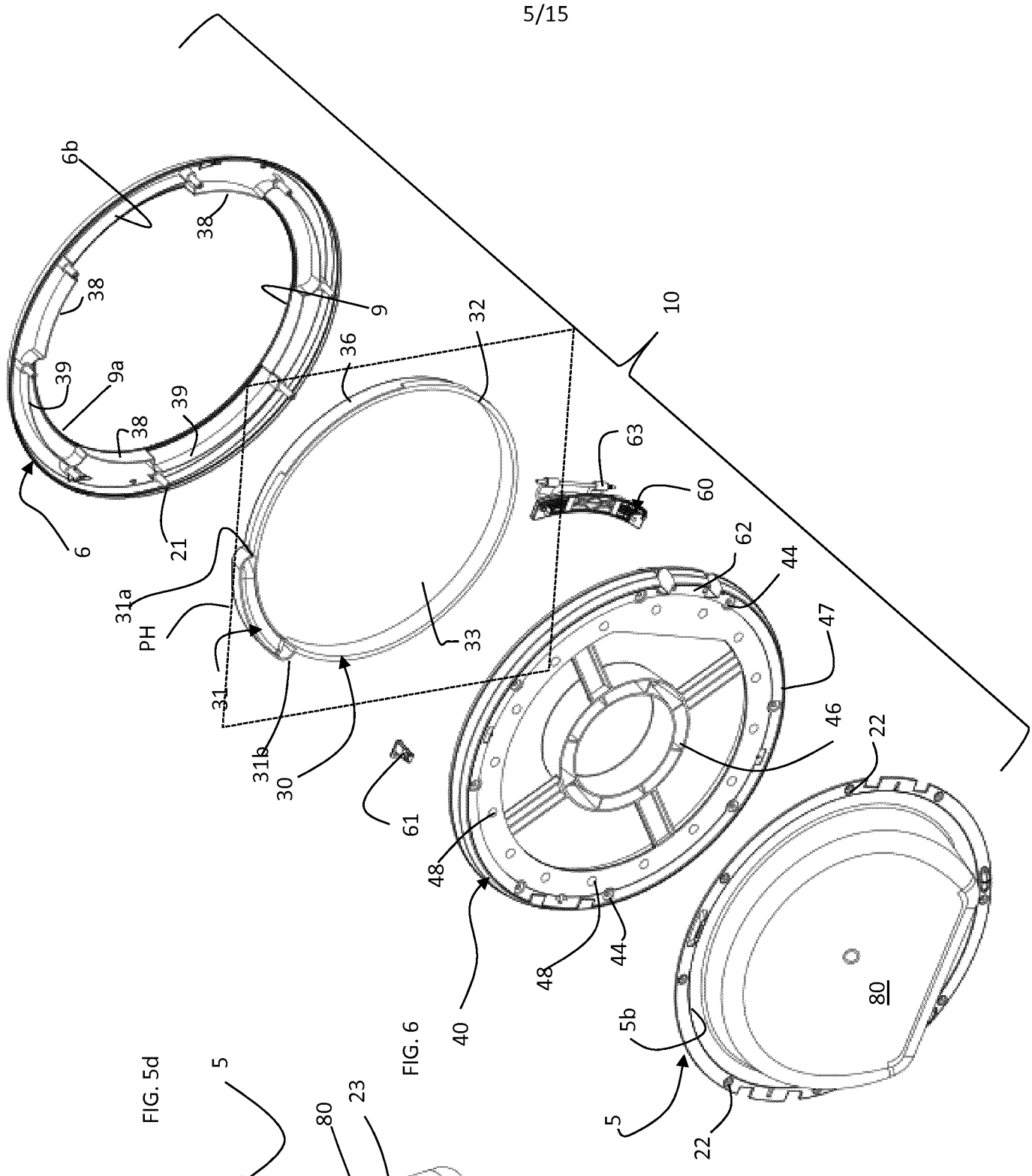
6b
38
38
9
10
32
36
39
9a
39
38
63
60
6
21
62
44
31a
PH
33
47
31
46
22
31b
30
61
48
48
44
40
80
5b
5
22

FIG. 6

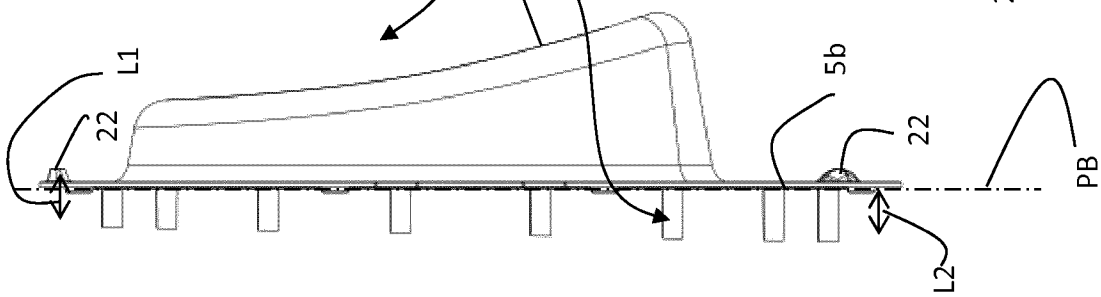
5
80
23
L1
22
5b
22
PB
L2

FIG. 5d

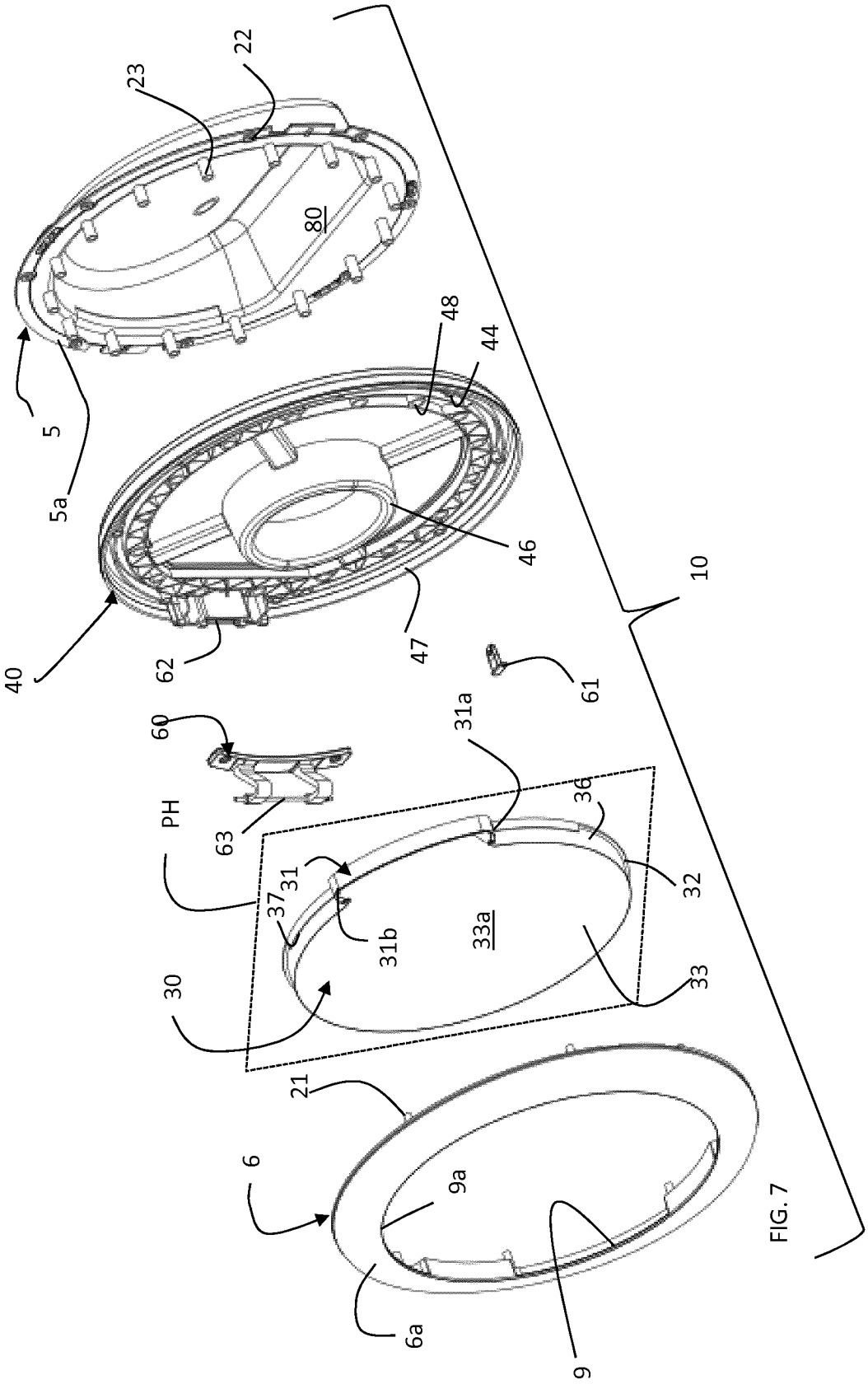
22
23
80
48
44
5
5a
46
10
40
62
47
61
60
31a
36
PH
63
31
37
32
31b
33a
30
33
21
6
9a
6a
9

FIG. 7

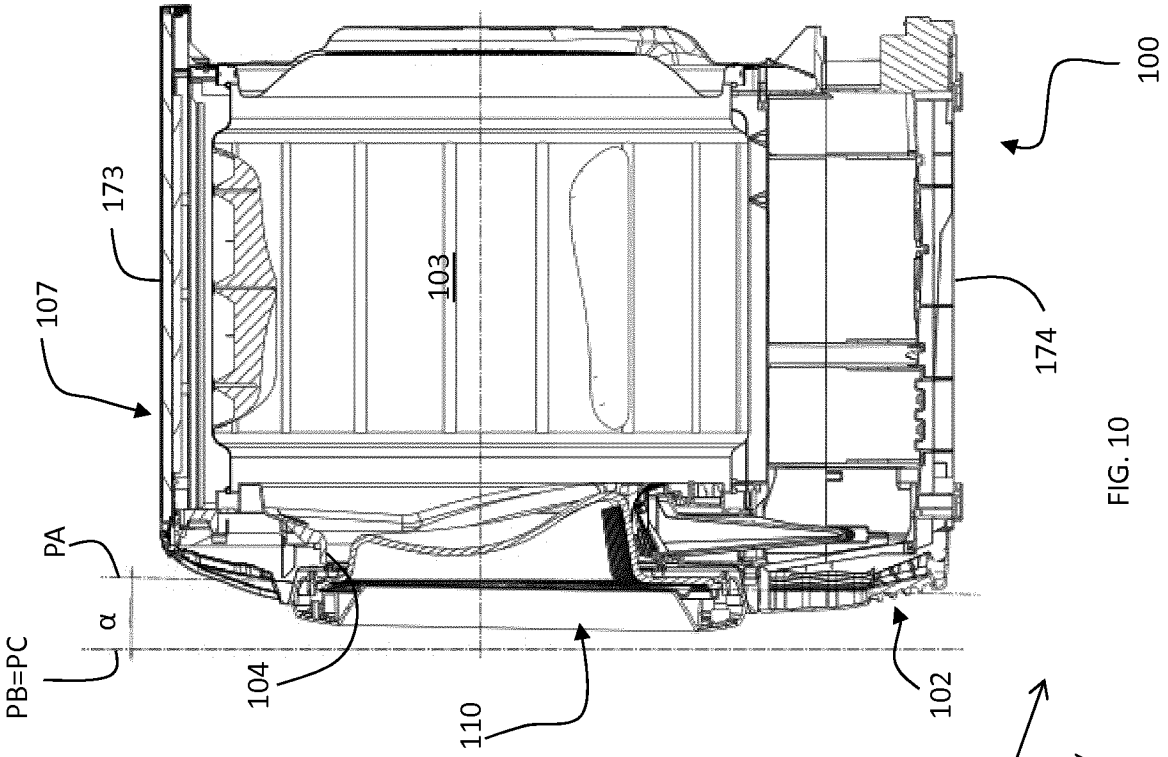
100
174
103
173
107
PA
α
PB=PC
104
110
102

FIG. 10

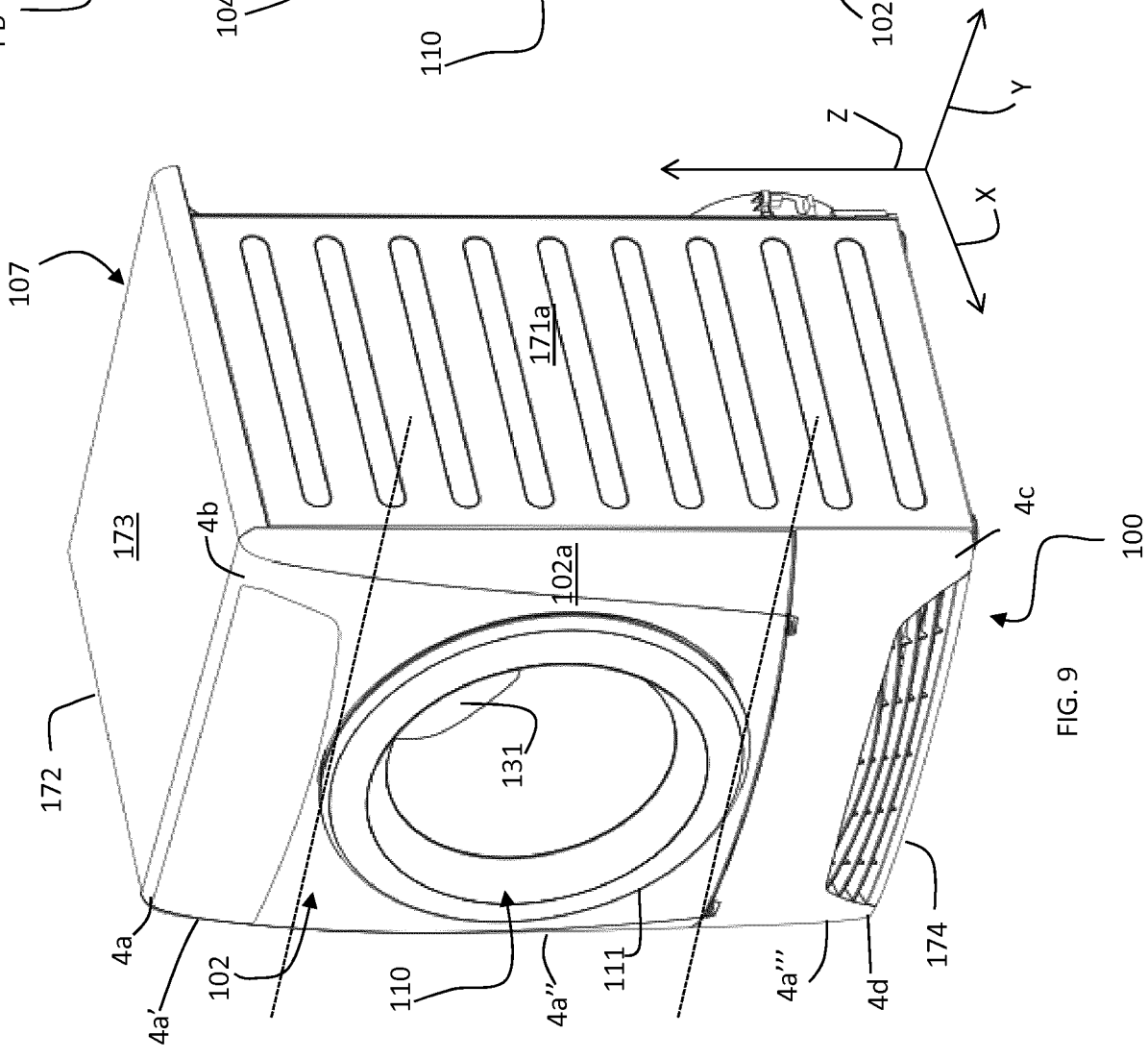
Z
Y
X
107
171a
173
4b
4c
100
102a
131
172
4a
4a'
102
110
4a''
111
4a'''
4d
174

FIG. 9

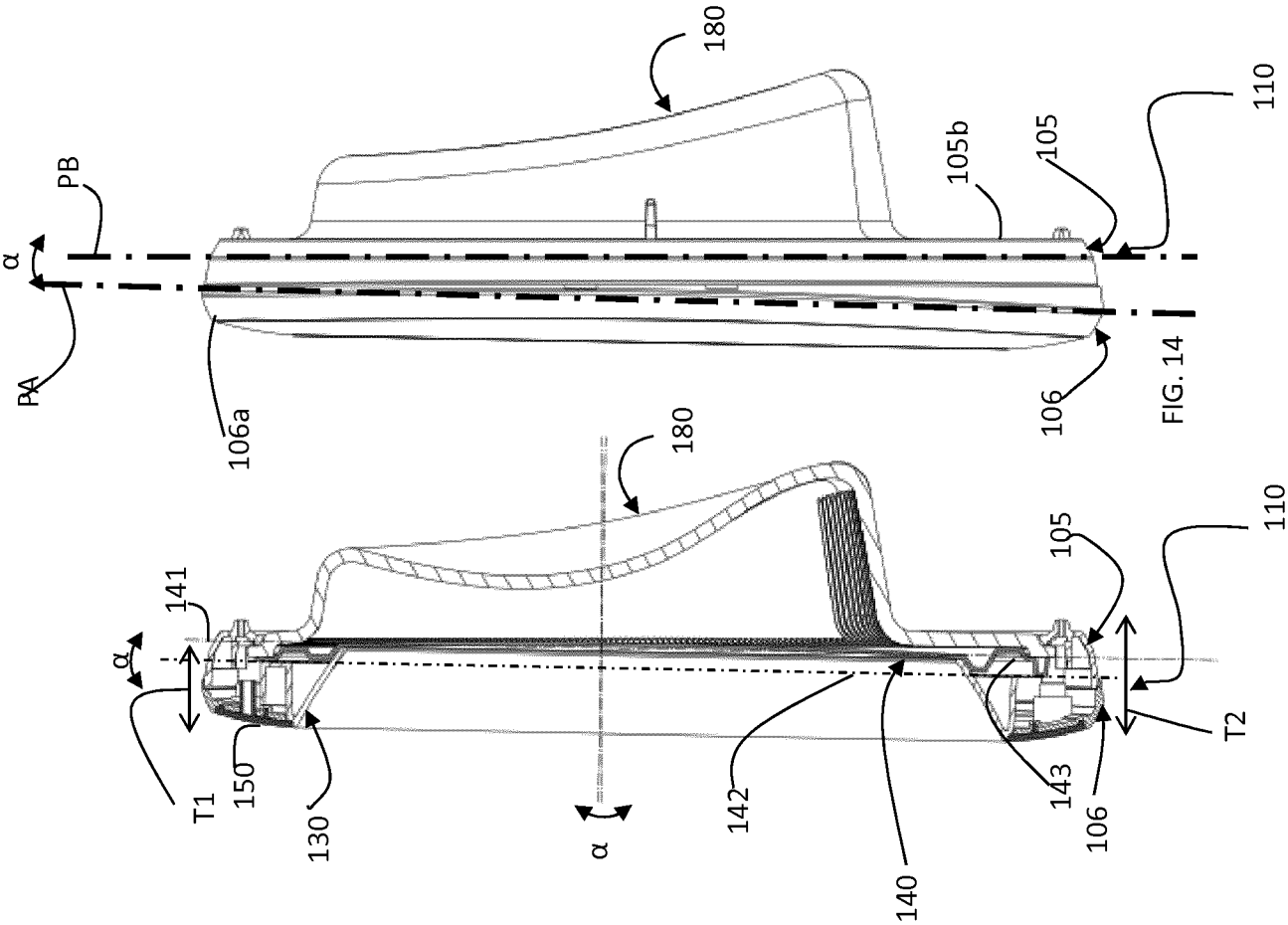

FIG. 14

FIG. 13

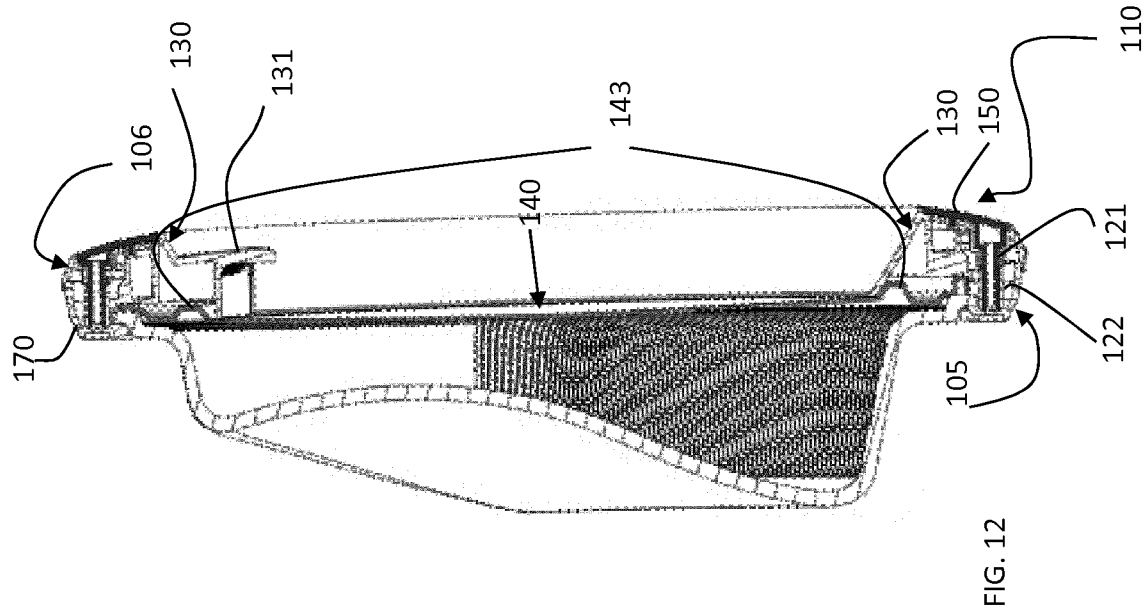

FIG. 12

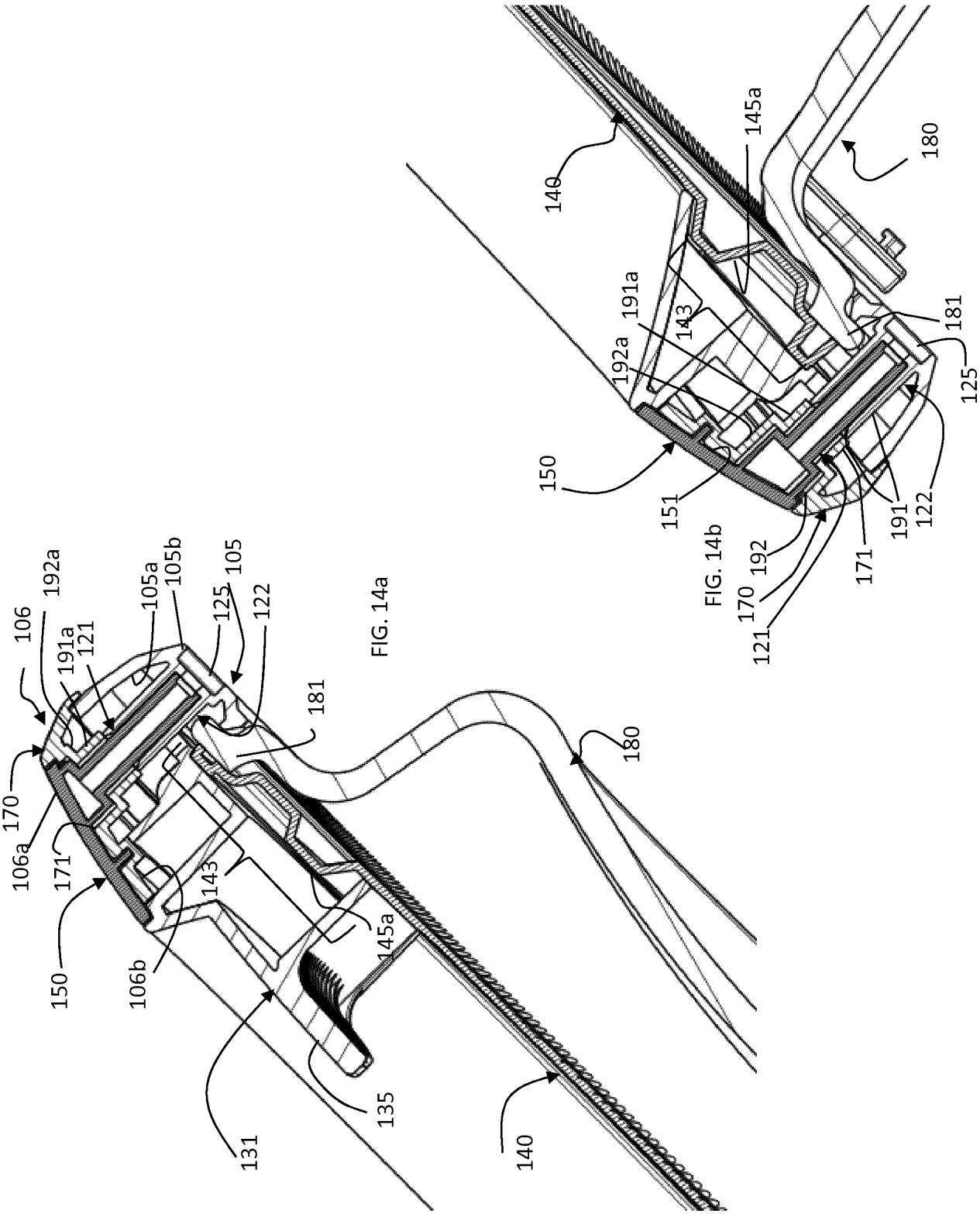
106
192a
191a
121
105a
105b
125
105
122
181
170
106a
171
143
145a
150
106b
131
135
140
180
FIG. 14a
140
145a
180
191a
143
192a
181
125
150
151
191
122
192
171
170
121
FIG. 14b

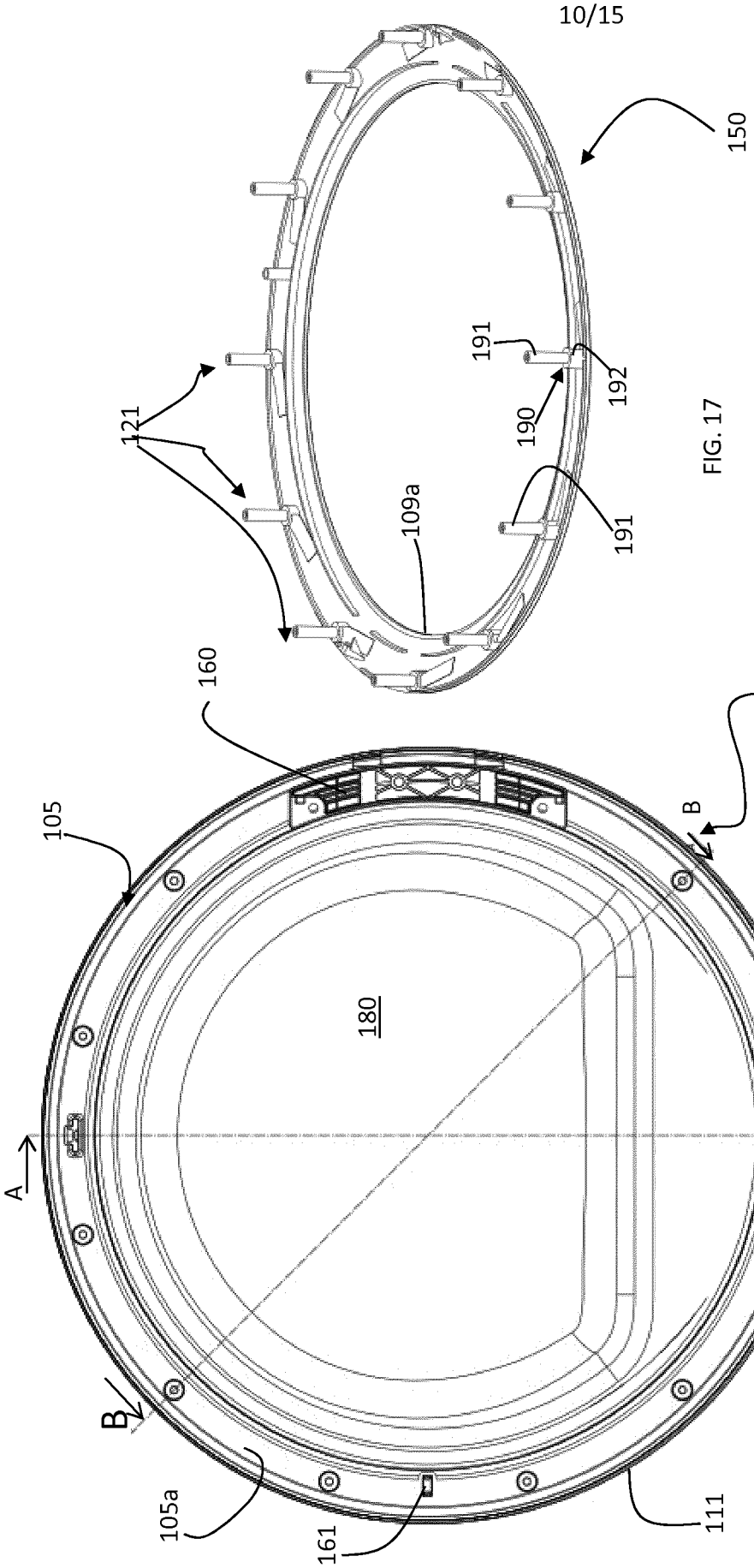

FIG. 11

FIG. 17

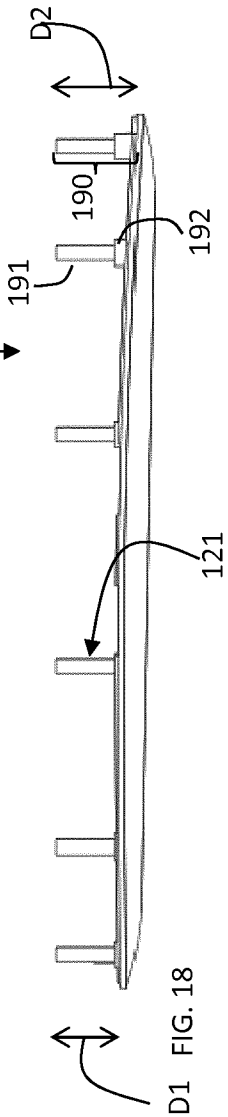

FIG. 18

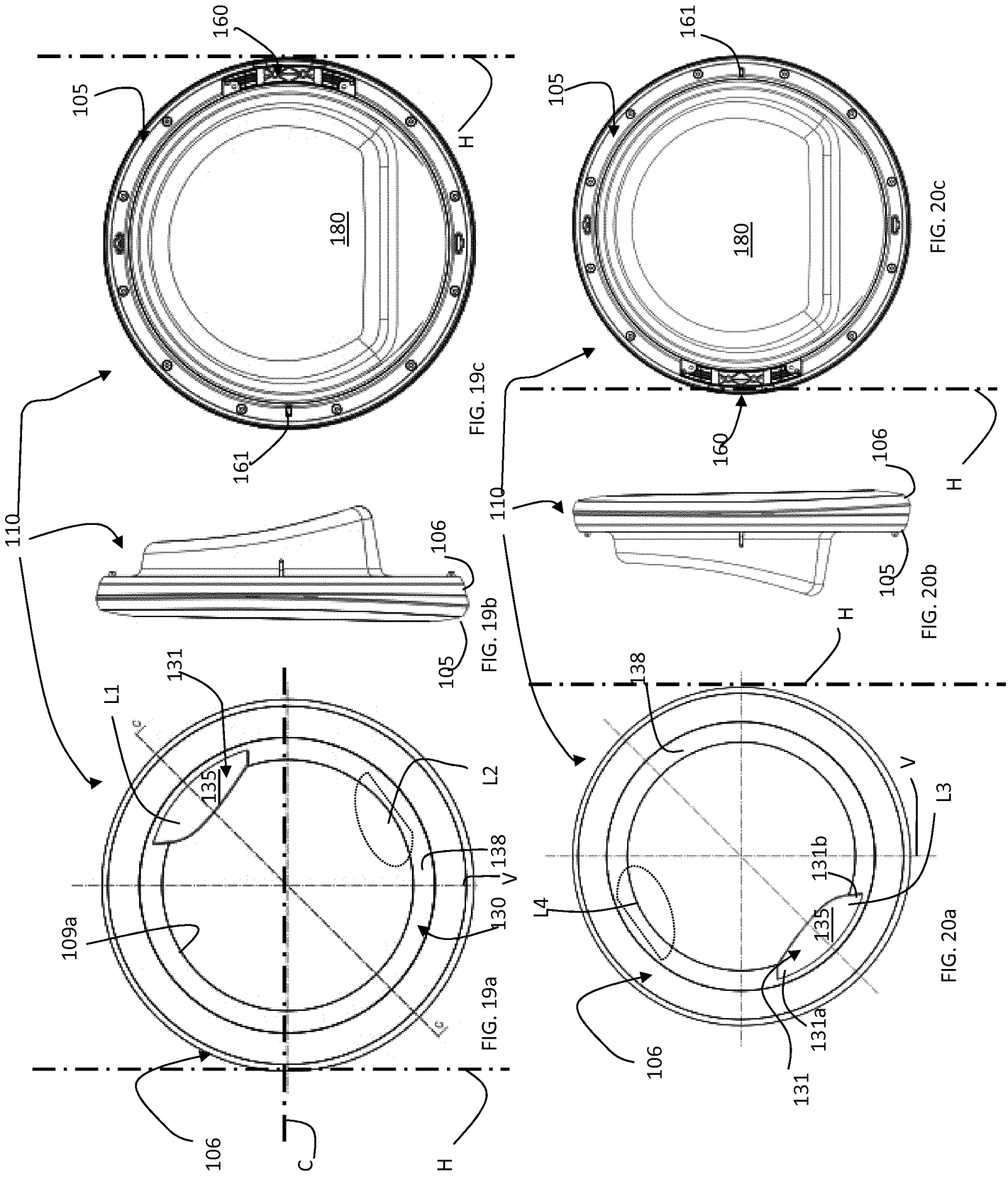
160
105
180
161
H
FIG. 19c
110
106
105
FIG. 19b
131
L1
135
L2
138
V
130
109a
106
C
H
FIG. 19a
161
105
180
FIG. 20c
160
106
105
FIG. 20b
110
H
138
V
L3
131b
L4
135
131a
106
131
FIG. 20a

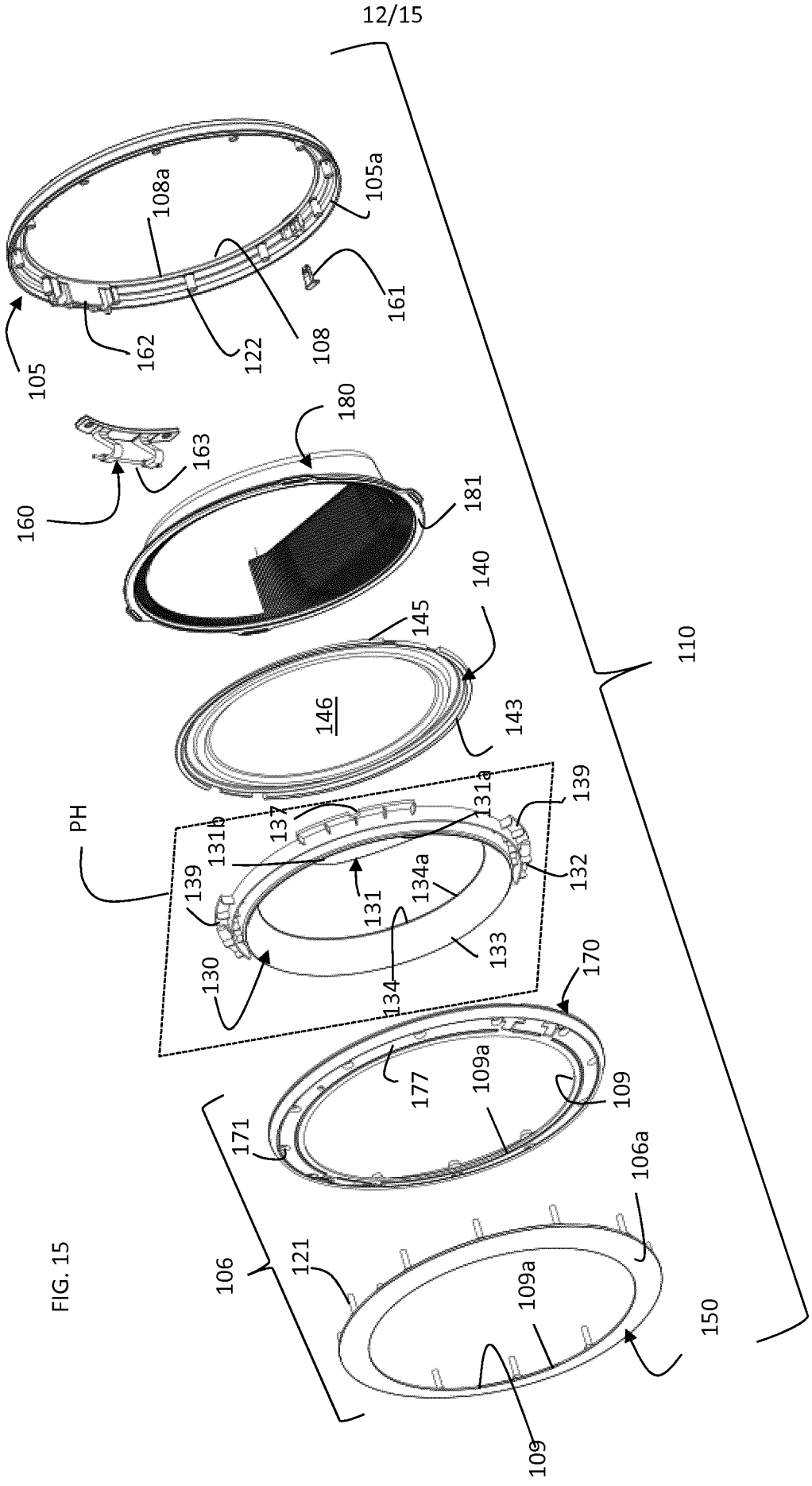
105
162
122
108
108a
105a
161
160
163
180
181
140
145
146
143
110
PH
139
131b
137
131a
139
132
131
134a
130
134
133
170
177
109a
109
171
106
121
106a
109a
150
109

FIG. 15

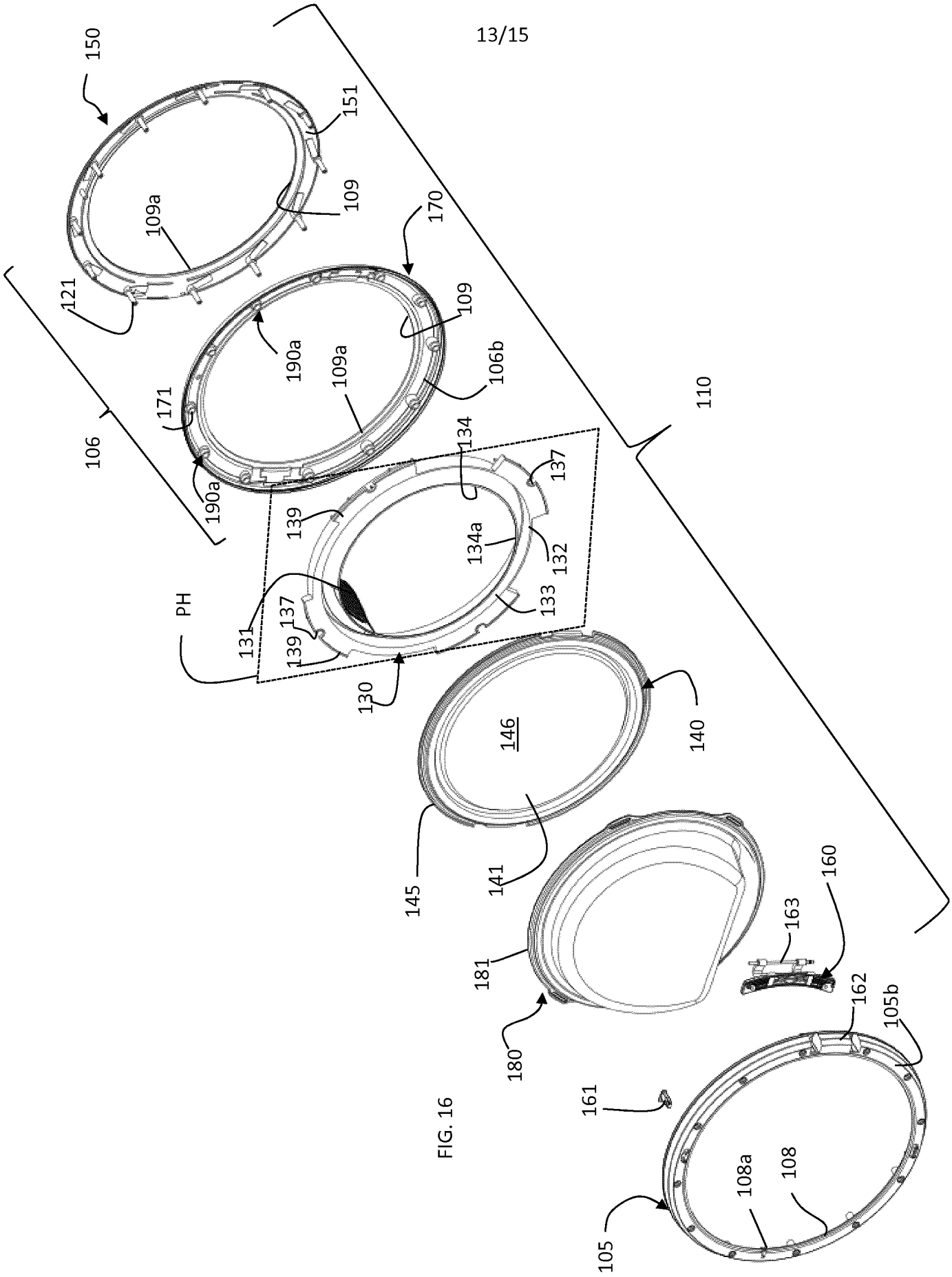
150
151
109
109a
121
170
109
190a
109a
106b
171
106
190a
134
137
139
134a
132
133
PH
131
137
139
130
110
146
140
145
141
160
163
181
180
162
105b
161
108a
108
105

FIG. 16

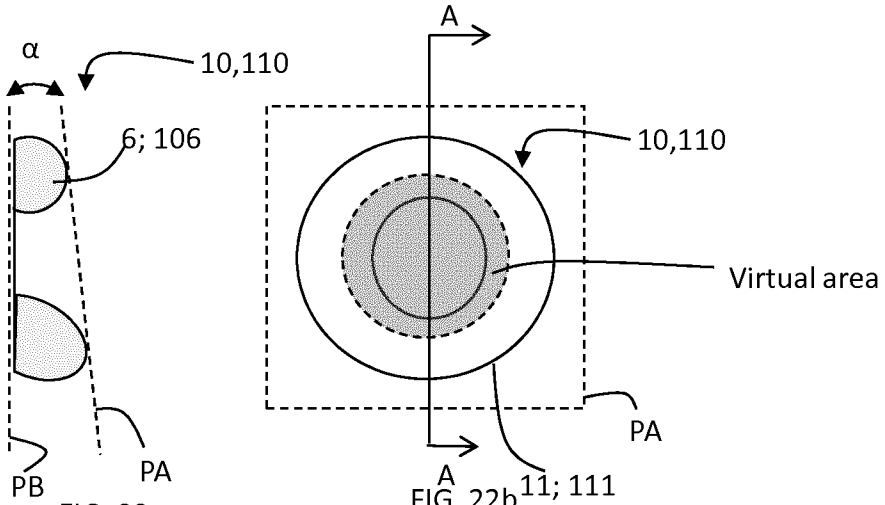

FIG. 22a FIG. 22b

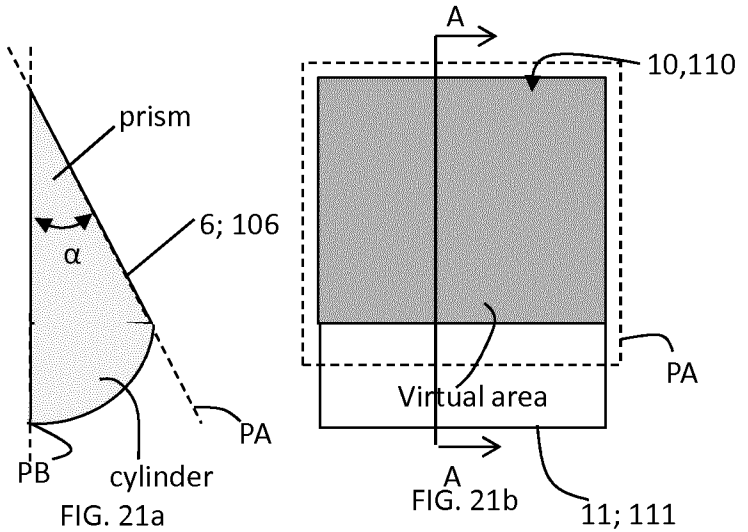

FIG. 21a FIG. 21b

FIG. 23a

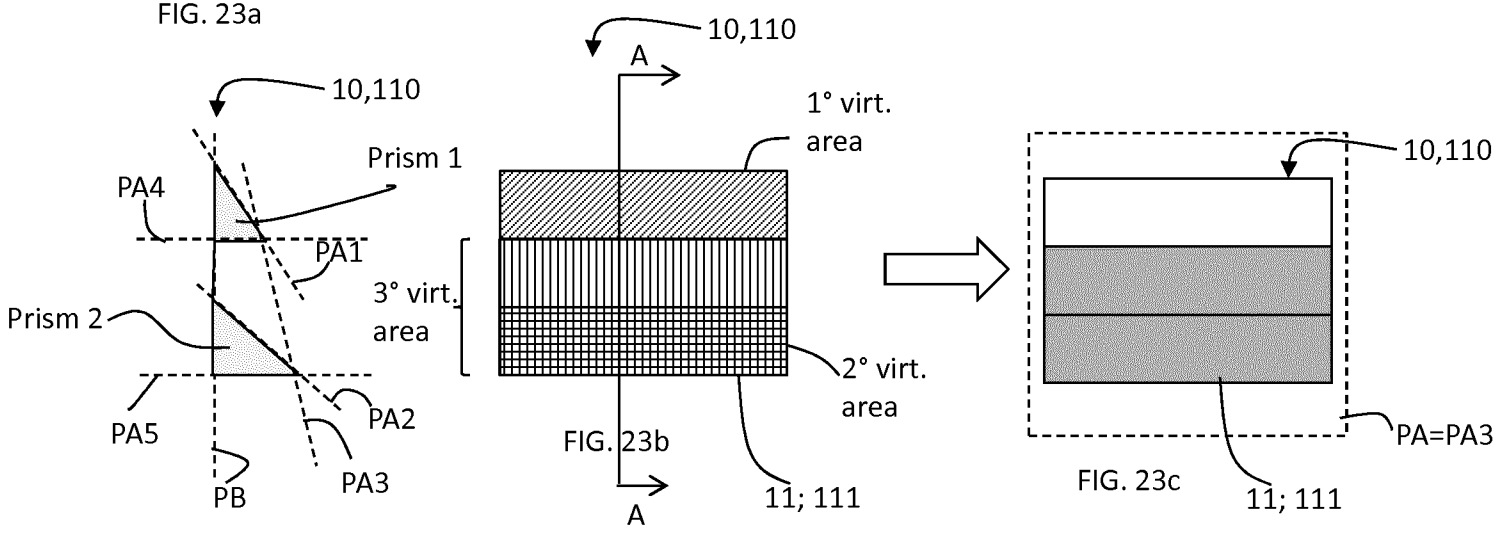

FIG. 23b FIG. 23c

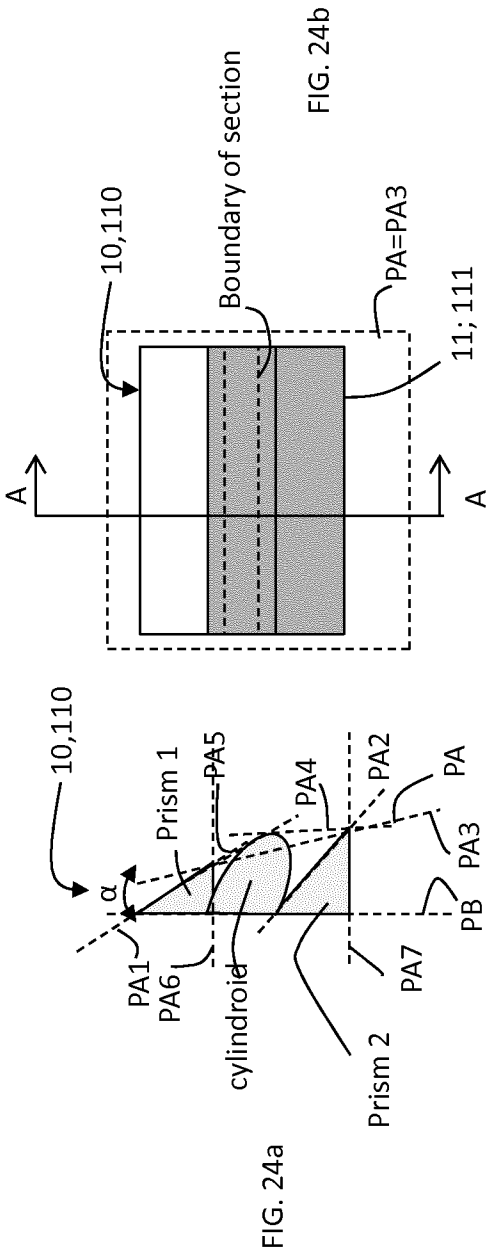

FIG. 24a

FIG. 24b

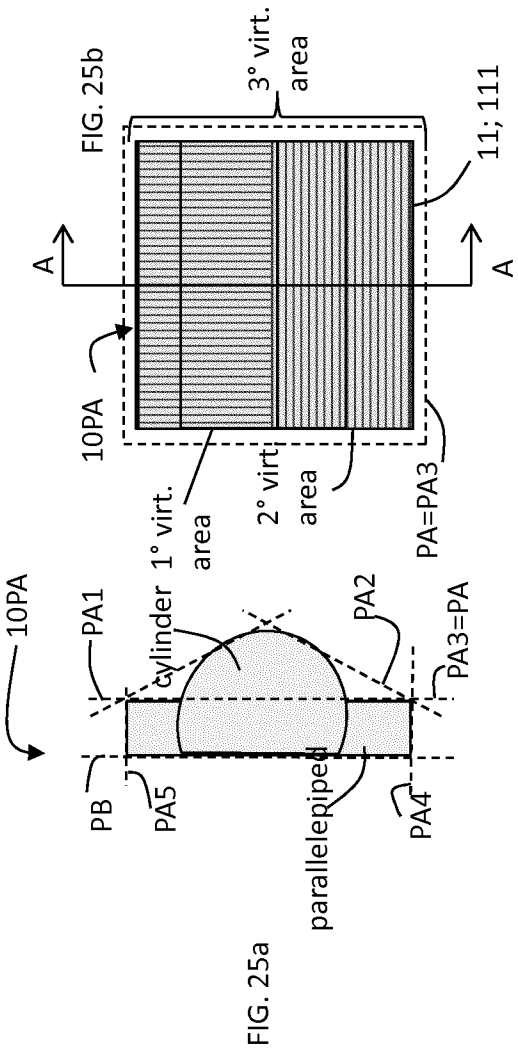

FIG. 25a

FIG. 25b

INTERNATIONAL SEARCH REPORT

International application No
PCT/EP2014/066482

A. CLASSIFICATION OF SUBJECT MATTER
INV. D06F39/14 D06F58/04
ADD.

According to International Patent Classification (IPC) or to both national classification and IPC

B. FIELDS SEARCHED

Minimum documentation searched (classification system followed by classification symbols)
D06F

Documentation searched other than minimum documentation to the extent that such documents are included in the fields searched

Electronic data base consulted during the international search (name of data base and, where practicable, search terms used)
EPO-Internal, WPI Data

C. DOCUMENTS CONSIDERED TO BE RELEVANT

Category*	Citation of document, with indication, where appropriate, of the relevant passages	Relevant to claim No.
A	WO 2011/012593 A1 (BSH BOSCH SIEMENS HAUSGERAETE [DE]; SCHOENE OLIVER [US]) 3 February 2011 (2011-02-03) cited in the application the whole document	1-15
A	EP 1 386 994 A1 (LG ELECTRONICS INC [KR]) 4 February 2004 (2004-02-04) paragraph [0046] - paragraph [0054] paragraph [0077] - paragraph [0081]	1-15
A	EP 1 466 047 A1 (LG ELECTRONICS INC [KR]) 13 October 2004 (2004-10-13) cited in the application the whole document	1-15

☐ Further documents are listed in the continuation of Box C.

☒ See patent family annex.

* Special categories of cited documents :

"A" document defining the general state of the art which is not considered to be of particular relevance

"E" earlier application or patent but published on or after the international filing date

"L" document which may throw doubts on priority claim(s) or which is cited to establish the publication date of another citation or other special reason (as specified)

"O" document referring to an oral disclosure, use, exhibition or other means

"P" document published prior to the international filing date but later than the priority date claimed

"T" later document published after the international filing date or priority date and not in conflict with the application but cited to understand the principle or theory underlying the invention

"X" document of particular relevance; the claimed invention cannot be considered novel or cannot be considered to involve an inventive step when the document is taken alone

"Y" document of particular relevance; the claimed invention cannot be considered to involve an inventive step when the document is combined with one or more other such documents, such combination being obvious to a person skilled in the art

"&" document member of the same patent family

Date of the actual completion of the international search	Date of mailing of the international search report
23 September 2014	20/10/2014

Name and mailing address of the ISA/	Authorized officer
European Patent Office, P.B. 5818 Patentlaan 2 NL - 2280 HV Rijswijk Tel. (+31-70) 340-2040, Fax: (+31-70) 340-3016	Jezierski, Krzysztof

INTERNATIONAL SEARCH REPORT

Information on patent family members

International application No
PCT/EP2014/066482

Patent document cited in search report	Publication date	Patent family member(s)	Publication date
WO 2011012593 A1	03-02-2011	CA 2709557 A1	31-01-2011
		US 2011023316 A1	03-02-2011
		WO 2011012593 A1	03-02-2011
EP 1386994 A1	04-02-2004	AU 2003227351 A1	19-02-2004
		CN 1475621 A	18-02-2004
		EP 1386994 A1	04-02-2004
		JP 4376010 B2	02-12-2009
		JP 2004065957 A	04-03-2004
		KR 20040012000 A	11-02-2004
		US 2004020246 A1	05-02-2004
		US 2008256988 A1	23-10-2008
EP 1466047 A1	13-10-2004	AU 2003235643 A1	30-07-2003
		CN 1496422 A	12-05-2004
		DE 60320634 T2	09-07-2009
		EP 1466047 A1	13-10-2004
		JP 2005514995 A	26-05-2005
		KR 20030062484 A	28-07-2003
		US 2004103691 A1	03-06-2004
		WO 03060224 A1	24-07-2003