(19) IPOS INTELLECTUAL PROPERTY OFFICE OF SINGAPORE

(11) Publication number: **SG 186815 A1**
(43) Publication date: **28.02.2013**
(51) Int. Cl: **A61F 6/14, A61F 5/48, A61K 31/56;**

(12) Patent Application

(21) Application number: **2012095246**
(22) Date of filing: **22.06.2011**
(30) Priority: **US 61/357,321 22.06.2010**

(71) Applicant: **ANU MAHASHABDE 13 VILLAGE ROAD, KENDALL PARK, NEW JERSEY 08824 NJ US US**
TSAO JIAXIANG 4 MORGAN COURT, NANUET, NEW YORK 10954 NY US US

(72) Inventor: **MAHASHABDE, ANU 13 VILLAGE ROAD KENDALL PARK, NJ 08824 US**
TSAO, JIAXIANG 4 MORGAN COURT NANUET, NY 10954 US

(54) **Title:**
METHODS OF TREATING CONDITIONS ASSOCIATED WITH OVERACTIVE BLADDER

(57) **Abstract:**
The present invention is directed to a method of treating a condition associated with an overactive bladder, comprising administering to a female an intravaginal device, comprising: (a) an annular first matrix comprising a pocket and a pocket wall, wherein the pocket wall has a uniform thickness, and wherein the pocket wall encompasses the pocket; and (b) a second matrix comprising an anticholinergic agent located in the pocket.

This PDF First Page has been artificially created from the Singaporian Abstracts

(12) INTERNATIONAL APPLICATION PUBLISHED UNDER THE PATENT COOPERATION TREATY (PCT)

(19) World Intellectual Property Organization
International Bureau

(43) International Publication Date
29 December 2011 (29.12.2011)

PCT

(10) International Publication Number
WO 2011/163356 A2

(51) International Patent Classification:
A61K 31/475 (2006.01)

(21) International Application Number:
PCT/US2011/041444

(22) International Filing Date:
22 June 2011 (22.06.2011)

(25) Filing Language: English

(26) Publication Language: English

(30) Priority Data:
61/357,321 22 June 2010 (22.06.2010) US

(72) Inventors; and
(71) Applicants : **MAHASHABDE, Anu** [US/US]; 13 Village Road, Kendall Park, NJ 08824 (US). **TSAO, Jiaxiang** [US/US]; 4 Morgan Court, Nanuet, NY 10954 (US).

(74) Agent: **WOODHOUSE, Scott**; Fanelli Haag PLLC, 1909 K Street, NW, Suite 1120, Washington, DC 20006 (US).

(81) Designated States *(unless otherwise indicated, for every kind of national protection available)*: AE, AG, AL, AM, AO, AT, AU, AZ, BA, BB, BG, BH, BR, BW, BY, BZ, CA, CH, CL, CN, CO, CR, CU, CZ, DE, DK, DM, DO, DZ, EC, EE, EG, ES, FI, GB, GD, GE, GH, GM, GT, HN, HR, HU, ID, IL, IN, IS, JP, KE, KG, KM, KN, KP, KR, KZ, LA, LC, LK, LR, LS, LT, LU, LY, MA, MD, ME, MG, MK, MN, MW, MX, MY, MZ, NA, NG, NI, NO, NZ, OM, PE, PG, PH, PL, PT, RO, RS, RU, SC, SD, SE, SG, SK, SL, SM, ST, SV, SY, TH, TJ, TM, TN, TR, TT, TZ, UA, UG, US, UZ, VC, VN, ZA, ZM, ZW.

(84) Designated States *(unless otherwise indicated, for every kind of regional protection available)*: ARIPO (BW, GH, GM, KE, LR, LS, MW, MZ, NA, SD, SL, SZ, TZ, UG, ZM, ZW), Eurasian (AM, AZ, BY, KG, KZ, MD, RU, TJ, TM), European (AL, AT, BE, BG, CH, CY, CZ, DE, DK, EE, ES, FI, FR, GB, GR, HR, HU, IE, IS, IT, LT, LU, LV, MC, MK, MT, NL, NO, PL, PT, RO, RS, SE, SI, SK, SM, TR), OAPI (BF, BJ, CF, CG, CI, CM, GA, GN, GQ, GW, ML, MR, NE, SN, TD, TG).

Published:

— *without international search report and to be republished upon receipt of that report (Rule 48.2(g))*

(54) Title: METHODS OF TREATING CONDITIONS ASSOCIATED WITH OVERACTIVE BLADDER

(57) Abstract: The present invention is directed to a method of treating a condition associated with an overactive bladder, comprising administering to a female an intravaginal device, comprising: (a) an annular first matrix comprising a pocket and a pocket wall, wherein the pocket wall has a uniform thickness, and wherein the pocket wall encompasses the pocket; and (b) a second matrix comprising an anticholinergic agent located in the pocket.

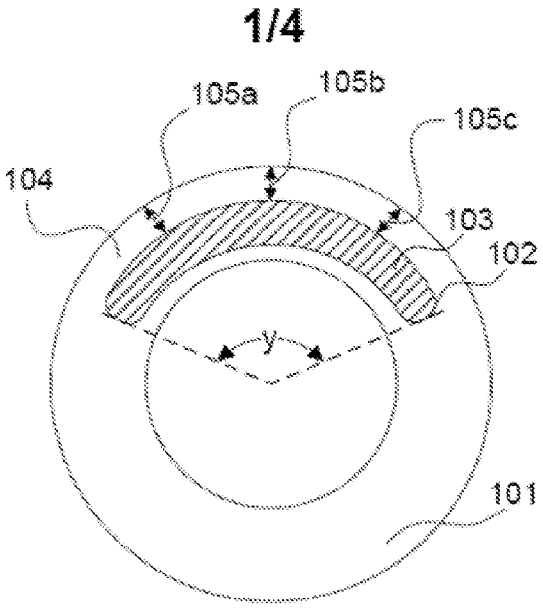

WO 2011/163356 A2

METHODS OF TREATING CONDITIONS ASSOCIATED WITH OVERACTIVE BLADDER

Field of the Invention

[0001] The present invention relates to methods of treating conditions associated with overactive bladder, comprising administering to females an intravaginal device comprising: (a) an annular first matrix comprising a pocket and a pocket wall, wherein the pocket wall has a uniform thickness, and wherein the pocket wall encompasses the pocket; and (b) a second matrix comprising an anticholinergic agent located in the pocket.

BACKGROUND OF THE INVENTION

[0002] Overactive bladder ("OAB") affects millions of individuals worldwide, a majority of those being women. In individuals with OAB, the detrusor muscle that controls the voluntary relaxation of the bladder during urination contracts spontaneously and involuntarily leading to a variety of symptoms such as urinary incontinence, urinary urgency, and increased urinary frequency.

[0003] Currently, OAB is treated by administration of the anticholinergic agent oxybutynin. Oxybutynin is believed to affect the detrusor muscle, leading to relaxation of the bladder and subsequent reduction of spontaneous involuntary contractions.

[0004] Currently marketed modes of oxybutynin administration include both oral (syrup or tablets), marketed under the tradenames DITROPAN® (syrup and tablets, Ortho-McNeil-Janssen Pharmaceutical, Inc., Titusville, New Jersey) and LYRINEL XL® (tablets, Janssen-Cilag EMEA, Beerse, Belgium), and transdermal patches, marketed under the tradename OXYTROL® (Watson Pharmaceutical, Inc., Morristown, New Jersey). Deleterious side effects can occur upon oral and transdermal administration of oxybutynin, e.g., dry eyes, dizziness, blurred vision, constipation, and/or headaches.

BRIEF SUMMARY OF THE INVENTION

[0005] The present invention is directed to a method of treating a condition associated with overactive bladder, comprising administering to a female an intravaginal device

comprising: (a) an annular first matrix comprising a pocket and a pocket wall, wherein the pocket wall has a uniform thickness, and wherein the pocket wall encompasses the pocket; and (b) a second matrix comprising an anticholinergic agent, wherein the second matrix is located in the pocket. In some embodiments, the first matrix further comprises a slit, wherein the slit extends a length of the pocket.

[0006] In some embodiments, the condition associated with overactive bladder is selected from the group consisting of urinary incontinence episodes, urinary urgency, urinary frequency, involuntary bladder contractions, and relaxation of the bladder smooth muscle.

[0007] In some embodiments, the intravaginal device is administered to the subject for 1 hour to 6 months. In some embodiments, the intravaginal device is administered to the subject for 1 day to 1 month. In some embodiments, the intravaginal device is administered to the subject for 2 days to 2 weeks.

[0008] In some embodiments, the anticholinergic agent is selected from the group consisting of oxybutynin, tolterodine, trospium, solifenacin, darifenacin, dicyclomine, propantheline, propiverine, bethanechol, methylbenactyzium, scopolamine, and pharmaceutically acceptable salts, esters, hydrates, prodrugs, or derivatives thereof. In some embodiments, the anticholinergic agent is oxybutynin.

[0009] In some embodiments, the anticholinergic agent is released from the intravaginal device at a rate of 0.1 mg/day to 50 mg/day. In some embodiments, the anticholinergic agent is released from the intravaginal device at a rate of 1 mg/day to 20 mg/day. In some embodiments, the anticholinergic agent is released from the intravaginal device at a rate of 4 mg/day to 6 mg/day.

[0010] In some embodiments, after the intravaginal device is administered to the subject, the average maximum (C_{max}) plasma level of the anticholinergic agent in the subject is 1 ng/mL to 15 ng/mL. In some embodiments, after the intravaginal device is administered to the subject, the average maximum (C_{max}) plasma level of the anticholinergic agent in the subject is 4 ng/mL to 12 ng/mL.

[0011] In some embodiments, after the intravaginal device is administered to the subject, the average time to achieve maximum blood plasma concentration (T_{max}) of the anticholinergic agent in the subject is 60 hours to 100 hours.

[0012] In some embodiments, the area under the plasma concentration of the anticholinergic agent versus time of administration curve (AUC) is 30 (h x ng/mL) to 800

(h x ng/mL). In some embodiments, the area under the plasma concentration of the anticholinergic agent versus time of administration curve (AUC) is 50 (h x ng/mL) to 100 (h x ng/mL). In some embodiments, the area under the plasma concentration of the anticholinergic agent versus time of administration curve (AUC) is 100 (h x ng/mL) to 300 (h x ng/mL).

[0013] In some embodiments, after the intravaginal device is administered to the subject, the average maximum (C_{max}) plasma level of a metabolite of the anticholinergic agent in the subject is 1 ng/mL to 15 ng/mL. In some embodiments, after the intravaginal device is administered to the subject, the average maximum (C_{max}) plasma level of a metabolite of the anticholinergic agent in the subject is 4 ng/mL to 12 ng/mL. In some embodiments, after the intravaginal device is administered to the subject, the average time to achieve maximum blood plasma concentration (T_{max}) of a metabolite of the anticholinergic agent in the subject is 60 hours to 100 hours.

[0014] In some embodiments, the area under the plasma concentration of a metabolite of the anticholinergic agent versus time of administration curve (AUC) is 30 (h x ng/mL) to 800 (h x ng/mL). In some embodiments, the area under the plasma concentration of a metabolite of the anticholinergic agent versus time of administration curve (AUC) is 50 (h x ng/mL) to 250 (h x ng/mL). In some embodiments, the area under the plasma concentration of a metabolite of the anticholinergic agent versus time of administration curve (AUC) is 100 (h x ng/mL) to 200 (h x ng/mL).

[0015] In some embodiments, the ratio of a metabolite of the anticholinergic agent AUC to the anticholinergic agent AUC is 0.5 to 2.5. In some embodiments, the metabolite of the anticholinergic agent is N-desethyloxybutynin.

BRIEF DESCRIPTION OF THE FIGURES

[0016] **FIG. 1** depicts a top view of an intravaginal ring having a first matrix (**101**) comprising a pocket (**102**), and a second matrix (**103**) located in the pocket, wherein the pocket is encompassed by a pocket wall (**104**). The length of the pocket around the perimeter of the first matrix is denoted by the variable (y). The pocket wall has a uniform thickness, i.e., **105a**, **105b**, and **105c** are substantially the same length.

[0017] **FIG. 2** depicts a top view of an intravaginal ring having an inner perimeter (**201**), an outer perimeter (**202**), an inner diameter (**203**), and outer diameter (**204**).

[0018] **FIG. 3A** depicts a side view of an intravaginal ring showing a cross-section having a first matrix (**301**) comprising a pocket (**303**) and a pocket wall (**302**), wherein the pocket wall has a uniform thickness, and wherein the pocket wall encompasses the pocket.

[0019] **FIG. 3B** depicts a side view of an intravaginal ring showing a cross-section of a vaginal ring having a first matrix (**301**) comprising a pocket (**302**) and a pocket wall (**303**), and a second matrix (**304**) comprising an anticholinergic agent located in the pocket.

[0020] **FIG. 4** depicts a side view of an intravaginal ring having a first matrix (**401**) having a pocket (**402**), and a slit (**403**), wherein the slit extends a length of the pocket.

DETAILED DESCRIPTION OF THE INVENTION

[0021] The present invention is directed to methods of treating conditions associated with overactive bladder, comprising administering to females an intravaginal device comprising: (a) an annular first matrix comprising a pocket and a pocket wall, wherein the pocket wall has a uniform thickness, and wherein the pocket wall encompasses the pocket; and (b) a second matrix comprising an anticholinergic agent located in the pocket.

[0022] As used herein, an "intravaginal device" refers to an object suitable for placement in the vaginal tract. In some embodiments, the intravaginal device provides for administration or application of an anticholinergic agent to the vaginal and/or urogenital tract of a subject, including, e.g., the vagina, cervix, or uterus of a female. As used herein, "female" refers to any animal classified as a mammal, including humans and non-humans, such as, but not limited to, domestic and farm animals, zoo animals, sports animals, and pets. In some embodiments, female refers to a human female. In some embodiments, the female is a menopausal woman. In some embodiments, the female is a peri-menopausal woman.

[0023] In some embodiments, the female refers to a human female, wherein the female meets one or more criteria selected from (1) predominant or pure urge incontinence consisting of $\geq$10 pure or predominant discrete urge incontinence episodes per week, (2) an average urinary frequency of $\geq$ 8 voids per 24 hours, and (3) an average total void volume of $\leq$ 3.0 L per 24 hours. In some embodiments, the female is a human female

having all three criteria described above. In some embodiments, the female is a human menopausal or peri-menopausal woman having all three criteria described above.

[0024] As used herein, the term "administering to" refers to placing a vaginal device of the present invention in contact with the vaginal and/or urogenital tract of a female, wherein at least some of the anticholinergic agent is transferred from the intravaginal device to the female. In some embodiments, administering refers to local administration of the anticholinergic agent. In some embodiments, administering refers to systemic administration of the anticholinergic agent. In some embodiments, the term administering refers to administering the anticholinergic agent to the female, wherein first pass metabolism of the anticholinergic agent is avoided. The methods of the present invention treat conditions associated with overactive bladder ("OAB"). The terms "treat" and "treatment" refer to both therapeutic treatment and prophylactic, maintenance, or preventative measures, wherein the object is to prevent or slow down (lessen) an undesired physiological effects of OAB, or obtain beneficial or desired clinical results. For purposes of this invention, beneficial or desired clinical results include, but are not limited to: alleviation of symptoms or signs; diminishment of extent of condition, disorder or disease; stabilization (i.e., not worsening) of the OAB or slowing of OAB progression; and amelioration of the OAB. Treatment includes eliciting a clinically significant response, without excessive levels of side effects. The intravaginal devices of the present invention are used for treating symptoms of OAB that include, but are not limited to, urinary incontinence, urgency, frequency and involuntary bladder contractions. The intravaginal devices of the present invention can further be used to relax the bladder smooth muscle.

[0025] The present invention also includes methods of decreasing the number of urinary incontinence episodes in a subject. A urinary incontinence episode is characterized by the involuntary release of urine accompanied by or immediately preceded by urgency. In some embodiments, the number of urinary incontinence episodes is decreased 2% to 30%, 4% to 20%, or 5% to 15%.

[0026] The present invention also includes methods of decreasing the average daily urinary frequency in a subject. Urinary frequency refers to the number of urination events performed by an individual. Thus, conditions associated with a high number of urination events, e.g., nocturia, are treated by the device of the present invention. In some

embodiments, urinary frequency is decreased 5% to 30%, 6% to 20%, or 7% to 15%. In some embodiments, the method of the present invention is used to treat nocturia.

[0027] In some embodiments, the present invention includes methods of decreasing involuntary bladder contractions in a subject. Involuntary bladder contractions are characterized by lack of ability to control or regulate bladder movement. In some embodiments, the number of involuntary bladder contractions is decreased 5% to 30%, 6% to 20%, or 7% to 15%.

[0028] In some embodiments, the present invention includes methods of inducing relaxation of the bladder smooth muscle in a subject. Relaxation of the bladder smooth muscle allows for increased control over muscle function and urination.

[0029] In some embodiments, the invention is directed to a method of decreasing the severity or the frequency of urinary urgency. In some embodiments, urinary urgency is characterized as the sudden, difficult to deter, and/or compelling desire to void urine.

[0030] In some embodiments, elimination of first-pass metabolism of the anti-cholinergic agent, e.g., oxybutynin, in the liver, is an advantage of the vaginal delivery of the present invention. Vaginal delivery can reduce the production of first-pass oxybutynin metabolite N-desethyloxybutynin. In some embodiments, reduction in the plasma concentration of this metabolite can reduce the severity of anticholinergic side effects, e.g., dry mouth, constipation, and/or blurred vision.

[0031] In some embodiments, the present invention provides for long-term delivery of a constant level of an anticholinergic agent, e.g., oxybutynin, from a single treatment.

[0032] In some embodiments, vaginal delivery of the anticholinergic agent, e.g., oxybutynin, may allow accumulation of the anticholinergic agent at the bladder at lower doses than is achievable by oral dosing. While not being bound by any particular theory, the bladder and the vaginal tract are anatomically proximal to each other, and the vascular and lymphatic networks of the two organs are shared to a high degree, raising the possibility of accumulation of the anticholinergic agent at the bladder. During intravascular delivery, such accumulation in the bladder may enhance and/or prolong the therapeutic effects of the anticholinergic agent, allowing for decreased overall dosing of the anticholinergic agent.

[0033] In some embodiments, the intravaginal devices comprise an anticholinergic agent. As used herein, an "anticholinergic agent" refers to a compound that blocks the

neurotransmitter acetylcholine in the central and peripheral nervous systems. Anticholinergic agents suitable for use with the present invention include agents that have a localized effect, as well as systemically acting anticholinergic agents that act at a point remote from the vaginal or urogenital tract. Anticholinergic agents suitable for use with the present invention include, but are not limited to, oxybutynin, tolterodine, trospium, solifenacin, darifenacin, dicyclomine, propantheline, propiverine, bethanechol, methylbenactyzium, scopolamine, combinations thereof, and pharmaceutically acceptable salts thereof.

[0034] In some embodiments, the anticholinergic agent is oxybutynin, tolterodine, trospium, solifenacin, darifenacin, dicyclomine, propantheline, propiverine, or pharmaceutically acceptable salts thereof.

[0035] In some embodiments, the anticholinergic agent is oxybutynin or a pharmaceutically acceptable salt thereof, such as, e.g., oxybutynin hydrochloride. Oxybutynin is represented by the chemical formula $C_{22}H_{31}NO_3$, the International Union of Pure and Applied Chemistry (IUPAC) name 4-diethylaminobut-2-ynyl2-cyclohexyl-2-hydroxy-2-phenyl-ethanoate, Chemical Abstracts Service, (CAS) number 5633-20-5, and the PubChem Compound identification number 4634. As used herein, the term "oxybutynin" refers to oxybutynin as well as its pharmaceutically acceptable salts, esters, hydrates, prodrugs, or derivatives thereof unless otherwise noted.

[0036] In some embodiments, administration of the anticholinergic agent by the device results in treatment-emergent adverse events. The term "adverse events" refers to any events, occurrences, incidents, symptoms, indications, or other related happenings that have a temporal relationship with administration of the anticholinergic device of the invention. In some embodiments, administration of the device to a subject results in at least one adverse event such as, but not limited to, infections and infestations, gastrointestinal disorders, reproductive system and breast disorders, muscoloskeletal and connective tissue disorders, nervous system disorders, renal and urinary disorders, and sensory disorders. Adverse events relating to infections and infestations can include, but are not limited to, urinary tract infection, vulvovaginal mycotic infection, sinusitis, and upper respiratory tract infection. Adverse events relating to gastrointestinal disorders can include, but are not limited to, dry mouth, nausea, abdominal pain, constipation, dyspepsia, and diarrhoea. Adverse events relating to the reproductive system and breast

disorders can include, but are not limited to, vaginal discharge, vaginal pain, vaginal hemorrhage, and vaginal erythema. Adverse events relating to muscoloskeletal and connective tissue disorders can include, but are not limited to, back pain. Adverse events relating to nervous system disorders, can include, but are not limited to, headache, dizziness, and somnolence. Adverse events relating to renal and urinary disorders, can include, but are not limited to, dysuria. Adverse disorders relating to sensory disorders can include, but are not limited to, dry eyes and blurred vision. Thus, in some embodiments, the present invention is directed to a method of reducing one or more adverse events as described herein.

[0037] In some embodiments, the method of the present invention comprises administering an intravaginal device comprising an annular first matrix. As used herein, "annular" refers to a shape of, relating to, or forming a ring. Annular shapes suitable for use with the present invention include a ring, an oval, an ellipse, a toroid, and the like. In some embodiments, the intravaginal device of the present invention is a vaginal ring.

[0038] Materials used in the intravaginal device of the present invention can include any materials suitable for placement in the vaginal tract. In some embodiments, the materials used in the intravaginal device are nontoxic, physiologically suitable, and/or non-absorbable in a subject, i.e., they are not absorbed in the vaginal tract. The materials used in the present invention are compatible with an anticholinergic agent. Compatible materials include those materials that are inert, chemically stable, do not chemically interact with, or otherwise affect and/or alter the anticholinergic agent. In some embodiments, the materials are pliable, malleable, and/or capable of being suitably shaped for intravaginal administration.

[0039] The intravaginal device of the present invention comprises a first matrix. As used herein, a "first matrix" refers to any solid, semi-solid, or gel medium. In some embodiments, the first matrix is an amorphous polymer network formed when a polymer or a mixture of polymers undergo cross-linking. Each polymer is comprised of monomeric units, which are linked together to form the polymer. The monomeric units can comprise carbon, hydrogen, oxygen, silicon, halogen, and combinations thereof. The first matrix can be shaped by molding, extrusion, coextrusion, compression, or combinations thereof.

[0040] The intravaginal device of the present invention can be flexible. As used herein, "flexible" refers to the ability of a solid or semi-solid to bend or withstand stress and strain without being damaged or broken. For example, the device of the present invention can be deformed or flexed, such as, for example, using finger pressure (e.g., applying pressure from opposite external sides of the device using the fingers), and upon removal of the pressure, substantially return to its original shape. The flexible properties of the intravaginal device of the present invention are useful for enhancing user comfort, and also for ease of administration to the vaginal tract and/or removal of the device from the vaginal tract.

[0041] The intravaginal device of the present invention comprises a first matrix. In some embodiments, the first matrix is permeable to the anticholinergic agent. In some embodiments, the first matrix is permeable to oxybutynin and/or water. In some embodiments, the first matrix can be chosen due to its mechanical and physical properties (e.g., solubility or permeability of an anticholinergic agent in the material).

[0042] In some embodiments, the first matrix comprises various polymers that are compatible with the vaginal tract. In some embodiments, the first matrix comprises a polysiloxane, a polyalkylene, a polystyrene, a polyvinyl acetate, a polyvinyl chloride, a polyester, a polyurethane, an acrylic, a nylon, a dacron, a teflon, or a combination thereof.

[0043] As used herein, a "polysiloxane polymer" refers to any of various compounds containing alternate silicon and oxygen atoms in either a linear or cyclic arrangement usually with one or two organic groups attached to each silicon atom. For example, polysiloxane polymers can include substituted polysiloxanes, and diorganopolysiloxanes such as diarylpolysiloxanes and dialkylpolysiloxanes.

[0044] In some embodiments, the first matrix comprises an optionally substituted polymer selected from the group consisting of polysiloxane polymers, polyalkylene polymers, polystyrene polymers, polyvinyl acetate polymers, polyvinyl chloride polymers, polyester polymers, polyurethane polymers, acrylic polymers, nylon polymers, dacron polymers, teflon polymers, and combinations thereof.

[0045] In some embodiments, the optionally substituted polymer is a polysiloxane polymer of Formula (I):

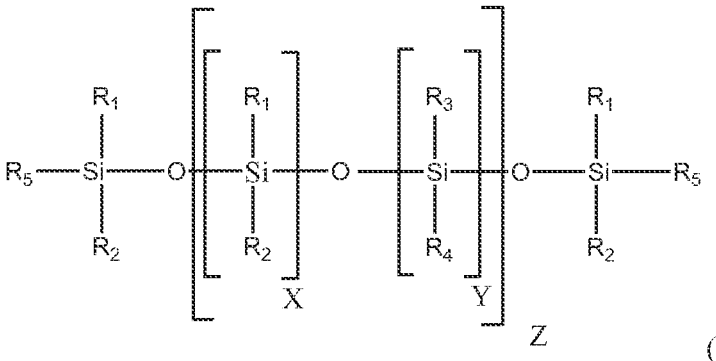

(I)

wherein X is 1 to 200; Y is 1 to 200; Z is 1 to 300; and R_1, R_2, R_3, R_4, and R_5 are independently selected from the group consisting of (C_{1-6})alkyl, amino(C_{1-6})alkyl, hydroxy(C_{1-6})alkyl, haloalkyl, cyano(C_{1-6})alkyl, thio(C_{1-6})alkyl, carboxy(C_{1-6})alkyl, aryl(C_{1-6})alkyl, (C_{1-6})alkoxy(C_{1-6})alkyl, (C_{2-6})alkenyl, amino(C_{3-10})alkenyl, hydroxy(C_{3-10})alkenyl, halo(C_{2-6})alkenyl, cyano(C_{2-6})alkenyl, thio(C_{3-10})alkenyl, carboxy(C_{3-10})alkenyl, aryl(C_{2-6})alkenyl, (C_{2-6})alkynyl, (C_{1-6})heteroalkyl, (C_{2-6})heteroalkenyl, (C_{2-6})heteroalkynyl, (C_{1-6})alkoxy, (C_{3-10})alkenyloxy, (C_{1-6})alkylenedioxy, amino(C_{2-6})alkoxy, hydroxy(C_{2-6})alkoxy, halo(C_{1-6})alkoxy, cyano(C_{1-6})alkoxy, thio(C_{1-6})alkoxy, carboxy(C_{2-6})alkoxy, aryl(C_{1-6})alkoxy, (C_{1-6})alkoxy(C_{2-6})alkoxy, halo(C_{1-6})alkoxy(C_{2-6})alkoxy, mono(C_{1-6})alkylamino, di(C_{1-6})alkylamino, (C_{1-6})alkylcarbonylamino, (C_{2-6})alkenylcarbonylamino, (C_{6-14})arylcarbonylamino, (C_{1-6})alkoxycarbonylamino, (C_{6-10})aryloxycarbonylamino, (C_{1-6})alkylcarbonyl, (C_{2-6})alkenylcarbonyl, (C_{6-10})arylcarbonyl, (C_{1-6})alkoxycarbonyl, (C_{6-14})aryloxycarbonyl, (C_{1-6})alkylsulfonylamino, (C_{2-6})alkenylsulfonylamino, and (C_{6-14})arylsulfonylamino. In some embodiments, at least one of R_1, R_2, R_3, and R_4 is a haloalkyl.

[0046] In some embodiments, the first matrix is a halogenated siloxane polymer, wherein at least one of R_1, R_2, R_3, and R_4 is a mono-haloalkyl, di-haloalkyl, or tri-haloalkyl. In some embodiments, the haloalkyl is a bromoalkyl, chloroalkyl, fluoroalkyl, or iodoalkyl. In some embodiments, the haloalkyl is a trifluoroalkyl. In some embodiments, the haloalkyl is a trifluoroethyl, trifluoropropyl, or trifluorobutyl. In some embodiments, the haloalkyl is a difluoroethyl, difluoropropyl, or difluorobutyl.

[0047] In some embodiments, X is 1 to 90, 10 to 80, or 20 to 70. In some embodiments, X is 1 to 10, 1 to 5, or 1 to 3. In some embodiments, Y is 1 to 90, 10 to 80, or 20 to 70. In some embodiments, Y is 1 to 10, 1 to 5, or 1 to 3. In some embodiments, Z is 10 to

250, 50 to 200, or 75 to 150. As one of skill in the art would recognize, the values of X and Y can vary in each Z subunit. Thus, e.g., X is 3 and Y is 4 in a first Z subunit, and X is 10 and Y is 2 in a second Z subunit.

[0048] In some embodiments, R_1 is a trifluoropropyl; R_2, R_3, and R_4 are independently C_1-C_3 alkyl; R_5 is vinyl; X is 1 to 2; Y is 1 to 2; and Z is 100 to 200.

[0049] In some embodiments, the first matrix comprises 3,3,3-trifluoropropyl methyldimethyl polysiloxane, e.g., the trifluoropropylmethyl polymer sold by NuSil Technology (Carpinteria, CA).

[0050] Throughout the present disclosure, all expressions of percentage, ratio, and the like are "by weight" unless otherwise indicated. As used herein, "by weight" is synonymous with the term "by mass," and indicates that a ratio or percentage defined herein is according to weight rather than volume, thickness, or some other measure.

[0051] In some embodiments, the first matrix is 50% to 100% by weight halogenated siloxane polymer. In some embodiments, the first matrix is 75% to 95% by weight halogenated siloxane polymer. In some embodiments, the first matrix is 80% to 90% by weight halogenated siloxane polymer.

[0052] In some embodiments, the first matrix is 80% to 95% by weight of the intravaginal device. In some embodiments, the first matrix is 80% to 95% by volume of the intravaginal device.

[0053] The first matrix comprises a pocket and a pocket wall, wherein the pocket wall has a uniform thickness, and wherein the pocket wall encompasses the pocket. As used herein, "pocket" refers to an indentation, groove, furrow, cut, impression, notch, recess, or likewise depression along the surface of the first matrix, which is encompassed by a pocket wall, and wherein the pocket wall has a uniform thickness. See, e.g., **FIGS. 1, 2, 3A**, and **3B**. In some embodiments, a "pocket" as defined herein can be exposed to the exterior of the device via a slit which extends a length of the pocket. Thus, the term "pocket" does not include a bore or other type of cavity that extends any length through the device, since (a) a bore contains at least one distinct entrance from the surface into the first matrix, and (b) a bore does not have a pocket wall of uniform thickness. In some embodiments a pocket of the present invention can be beneficial since anticholinergic agents in a second matrix can be released without having to pass through a separate matrix, e.g., the first matrix.

[0054] As used herein, "pocket wall" refers to a portion of the first matrix that defines the lateral boundaries of the pocket. See, e.g., **FIGS. 3A** and **3B**. Thus, the volume defined by the pocket wall comprises the pocket. The pocket wall has a uniform thickness, wherein the distance from the pocket to the lateral outer surface of the device is the same. In some embodiments, the pocket wall has a uniform thickness of 0.5 mm to 5 mm. In some embodiments, the pocket wall has a uniform thickness of 1 mm to 4 mm. In some embodiments, the pocket wall has a uniform thickness of 1.5 mm to 3 mm. In some embodiments, the pocket wall has a uniform thickness of 1 mm to 2 mm. A pocket wall of uniform thickness can allow the anticholinergic agent in the second matrix to be uniformly released from the intravaginal device through the pocket wall.

[0055] As used herein, "encompass" or "encompasses the pocket" refers to the degree by which the pocket wall covers the lateral surface area of the pocket. Thus, the pocket wall encompasses the pocket when the pocket wall covers 95% or more of the lateral surface area of the pocket. In some embodiments, the pocket wall encompasses the pocket when the pocket wall covers 90% or more of the lateral surface area of the pocket. In some embodiments, the pocket wall encompasses the pocket when the pocket wall covers 85% or more of the lateral surface area of the pocket. In some embodiments, the pocket wall encompasses the pocket when the pocket wall covers 80% or more of the lateral surface area of the pocket. By way of example, in some embodiments, the pocket can be tubular in shape, wherein 95% or more of the lateral surface area of the tubular pocket comprises the pocket wall.

[0056] In some embodiments, the length of the pocket can vary. For example, in some embodiments, the first matrix is annular in shape and the pocket of the first matrix can extend around a portion of the entire perimeter of the annular matrix. See, e.g., **FIG. 1**. In some embodiments the pocket extends from 10° to 180° around the perimeter of the first matrix. In some embodiments, the pocket extends from 80° to 120° around the perimeter of the first matrix. In some embodiments, the pocket extends 180°, 150°, 120°, 100°, 90°, 80°, 70°, 60°, 45°, 30°, or 10° around the perimeter of the annular first matrix. These variables are represented by the variable "y" in **FIG. 1**. In some embodiments, the pocket has a cross-sectional diameter of 3 mm to 8 mm, 4 mm to 7 mm, or 5 mm to 6 mm. In some embodiments, the pocket has a total volume of 7 cm^3 to 15 cm^3, 8 cm^3 to

14 cm^3, 9 cm^3 to 13 cm^3, or 10 cm^3 to 12 cm^3. In some embodiments, the first matrix comprises one or more pockets, e.g., two, three, four, or five pockets.

[0057] In some embodiments, the first matrix further comprises a slit on the outer perimeter of the first matrix, wherein the slit extends a length of the pocket. As used herein "slit" refers to any narrow opening, incision, fissure, aperture, breach, cleavage, crack, crevice, gash, split, chasm, or cut in the outer perimeter of the first matrix. In some embodiments, the slit has a uniform width. In some embodiments, the width of the slit is 0.1 mm to 2 mm. In some embodiments, the width of the slit is 0.2 mm to 1 mm. In some embodiments, the width of the slit is 0.4 mm to 0.6 mm. In some embodiments, the width of the slit is 0.5 mm. While not being bound by any particular theory, a slit extending a length of the pocket can allow for a uniform release of active agent from the device without having to pass through a separate matrix, e.g., the first matrix.

[0058] The intravaginal devices of the present invention further comprise a second matrix. As used herein, "second matrix" refers to any solid, semi-solid, or gel medium. In some embodiments, the second matrix is an amorphous polymer network formed when a polymer or a mixture of polymers undergo cross-linking. Each polymer is comprised of monomeric units, which are linked together to form the polymer. The monomeric units can comprise carbon, hydrogen, oxygen, silicon, halogen, or a combination thereof. The second matrix can be shaped by flow, molding, or extrusion. In some embodiments, the second matrix can be flexible. In some embodiments, the second matrix can be chosen due to its mechanical and physical properties (e.g., solubility of an anticholinergic agent in the material). In some embodiments, the second matrix is placed within the pocket of the first matrix as a liquid or gel (i.e., a low viscosity state) and the second matrix is polymerized, cured, or solidified.

[0059] In some embodiments, the device comprises more than two matrices, e.g., three or four matrices. In some embodiments, when two or more matrices are present, an anticholinergic agent is in each matrix, or optionally in only one matrix.

[0060] In some embodiments, the anticholingeric agent can be homogeneously dispersed in the second matrix. As used herein, "homogeneous" refers to a matrix that has a substantially uniform distribution of the anticholinergic agent throughout the matrix. In some embodiments, the anticholinergic is present in a uniform concentration throughout the second matrix.

[0061] In some embodiments, the anticholinergic agent is heterogeneously dispersed in the second matrix. As used herein, "heterogeneous" refers to a matrix that does not have a substantially uniform distribution of the anticholinergic agent throughout the matrix. For example, there can be segments, regions, or areas of the matrix with varying amounts of the anticholinergic agent located throughout the matrix.

[0062] In some embodiments, the second matrix comprises the same material as the first matrix. In some embodiments, the second matrix comprises a different material than that of the first matrix. For example, in some embodiments, the second matrix comprises a siloxane polymer and the first matrix comprises a halogenated siloxane polymer. In some embodiments, the siloxane polymer comprises a polymer of Formula II,

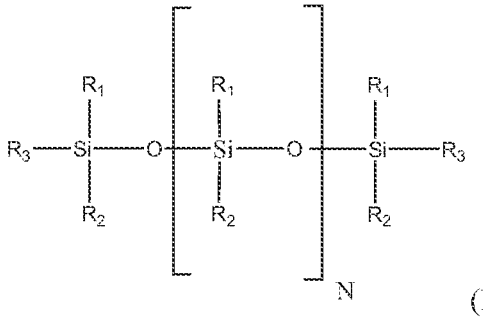

(II)

wherein R_1, R_2, and R_3 are independently selected from the group consisting of alkoxy, alkyl, alkynyl, alkynyl, alkenyl, alkylacryloyloxy, acryloyloxy, alkenylalkyl, aryl, and hydrogen; and N is 50 to 300. In some embodiments, R_1 and R_2 are independently alkyl or hydrogen. As one of skill in the art can appreciate, in a single polymer chain, the R_1 and/or R_2 substituents can vary. For example, in a single polymer chain, the R_1 and R_2 substituents can include various different alkyl substituents, e.g., methyl, ethyl, propyl, butyl, and the like.

[0063] The amount of the anticholinergic agent in the intravaginal device can vary. For example, in some embodiments, the second matrix comprises 20% to 70% by weight anticholingeric agent. In some embodiments, the second matrix comprises 30% to 60% by weight anticholingeric agent. In some embodiments, the second matrix comprises 40% to 50% by weight anticholingeric agent. In some embodiments, the second matrix comprises 50% by weight anticholingeric agent.

[0064] The amount of oxybutynin or a pharmaceutically acceptable salt thereof in the intravaginal device can vary. For example, in some embodiments, the second matrix comprises 20% to 70% by weight oxybutynin or a pharmaceutically acceptable salt

thereof. In some embodiments, the second matrix comprises 30% to 60% by weight oxybutynin or a pharmaceutically acceptable salt thereof. In some embodiments, the second matrix comprises 40% to 50% by weight oxybutynin or a pharmaceutically acceptable salt thereof. In some embodiments, the second matrix comprises 50% by weight oxybutynin or a pharmaceutically acceptable salt thereof.

[0065] In some embodiments, the second matrix is 30% to 80% by weight siloxane polymer. In some embodiments, the second matrix is 40% to 70% by weight siloxane polymer. In some embodiments, the second matrix is 50% to 60% by weight siloxane polymer.

[0066] In some embodiments, the second matrix is 5% to 50% by volume of the device. In some embodiments, the second matrix is 5% to 25%, 8% to 20%, 10% to 18%, or 12% to 15% by volume of the device.

[0067] In some embodiments, the second matrix is 5% to 50% by weight of the device. In some embodiments, the second matrix is 5% to 25%, 8% to 20%, 10% to 18%, or 12% to 15% by weight of the device.

[0068] The devices of the present invention are of any size suitable for placement in a vaginal tract of the subject for which it is administered. In some embodiments, the device of the present invention has a cross-sectional diameter of 1 mm to 10 mm. As used herein, a "cross-sectional diameter" refers to the longest straight line segment that passes through the center of a cross-section of the intravaginal device. See, e.g., **FIG. 3A**. In some embodiments, the device has a cross-sectional diameter of 1 mm to 10 mm, 2 mm to 9 mm, 3 mm to 7 mm, 4 mm to 6.5 mm, 5 mm to 6 mm, or 6 mm.

[0069] In some embodiments, the devices of the invention have an outer diameter of 40 mm to 80 mm. As used herein, an "outer diameter" refers to any straight line segment that passes through the center of the device, the center being viewed from a top view of the intravaginal device, and whose endpoints are each on the outer perimeter of the device. See, e.g., **FIG. 2 (204)**. In some embodiments, the device has an outer diameter of 40 mm to 80 mm, 45 mm to 65 mm, or 50 mm to 60 mm.

[0070] In some embodiments, the devices of the invention have an inner diameter of 10 mm to 60 mm. As used herein, an "inner diameter" refers to any straight line segment that passes through the center of the device, the center being viewed from a top view of the intravaginal device, and whose endpoints are on the inner perimeter of the device.

See, e.g., **FIG. 2 (203)**. In some embodiments, the device has an inner diameter of 10 mm to 60 mm, 10 mm to 50 mm, 10 mm to 40 mm, 20 mm to 40 mm, 10 mm to 30 mm, or 10 mm to 20 mm.

[0071] In some embodiments, the intravaginal devices of the present invention further comprise an excipient. Where two or more matrices are present in the device, an excipient is present in each matrix, or optionally in only one matrix, i.e., in either the first or the second matrix. As used herein, an "excipient" refers to a substance that is used in the formulation of the intravaginal device of the present invention, and, by itself, generally has little or no therapeutic value. One of skill in the art will recognize that a wide variety of pharmaceutically acceptable excipients is used including those listed in the *Handbook of Pharmaceutical Excipients*, Pharmaceutical Press 4th Ed. (2003) and *Remington: The Science and Practice of Pharmacy*, Lippincott Williams & Wilkins, 21st Ed. (2005), which are incorporated herein by reference in their entirety. As used herein, the term "pharmaceutically acceptable" refers to those compounds, materials, and/or compositions which are, within the scope of sound medical judgment, suitable for contact with the tissues of human beings and animals without excessive toxicity, irritation, allergic response, or other possible complications commensurate with a reasonable benefit/risk ratio. In some embodiments, the excipient can enhance permeabilization of the matrix and the release rate of the anticholinergic agent from the intravaginal vaginal ring. Examples of such excipients include, but are not limited to, a saturated polyglycolyzed glyceride, a block copolymer surfactant, an emulsifier, glyceryl monolaurate, microcrystalline cellulose, hydroxyethylcellulose, ethylcellulose, hydroxypropyl methylcellulose, polymethylmethacrylate, polyvinylpyrollidone, and mixtures thereof. The intravaginal device of the invention can also include excipients that enhance and/or promote absorption of the anticholinergic agent across the vaginal mucosa. Absorption promoters include but are not limited to nonionic surface active agents, bile salts, organic solvents, interesterified stone oil, and ethoxydiglycol. Other excipients, such as water, saline, additives, fillers, or other pharmaceutically acceptable and/or therapeutically effective compounds, can also be added to the device of the present invention.

[0072] In some embodiments, the methods of the present invention comprise administering to a female an intravaginal device for 1 hour to 6 months. In some

embodiments, the anticholinergic agent is released from the intravaginal device at a steady rate for 1 hour to 6 months after administration to a female, for up to 5 months after administration to a female, for up to 4 months after administration to a female, for up to 3 months after administration to a female, for up to 2 months after administration to a female, for up to 1 month or 30 days after administration to a female, for up to 25 days after administration to a female, for up to 21 days after administration to a female, for up to 15 days after administration to a female, for up to 10 days after administration to a female, for up to 7 days after administration to a female, for up to 4 days after administration to a female, for up to 2 days after administration to a female, for up to 1 day or 24 hours after administration to a female, for up to 20 hours after administration to a female, for up to 18 hours after administration to a female, for up to 16 hours after administration to a female, for up to 12 hours after administration to a female, for up to 8 hours after administration to a female, for up to 4 hours after administration to a female, or for up to 2 hours after administration to a female.

[0073] In some embodiments, the anticholinergic agent is released from the intravaginal device at a rate of 0.1 mg/day to 20 mg/day. As used herein, the "rate of release" or "release rate" refers to an amount of anticholinergic agent that is released from the intravaginal device over a defined period of time. In other embodiments, the anticholinergic agent is released from the intravaginal device at a rate of 0.1 mg/day to 20 mg/day, 0.5 mg/day to 15 mg/day, 1 mg/day to 10 mg/day, 2 mg/day to 8 mg/day, 4 mg/day to 6 mg/day, or 5 mg/day. In some embodiments, the anticholinergic agent is released from the intravaginal device at an average rate of 6 mg/day. In some embodiments, the anticholinergic agent is released from the intravaginal device at an average rate of 4 mg/day. In some embodiments, the anticholinergic agent is released from the intravaginal device at an average rate of 2 mg/day.

[0074] In some embodiments, the first matrix of the intravaginal devices of the present invention determines or controls the rate of release of an anticholinergic agent contained therein. In some embodiments, the second matrix of the intravaginal devices determines or controls the rate of release of the anticholinergic agent. In some embodiments, both the first and second matrices determine or control the rate of release of the anticholinergic agent.

[0075] In some embodiments, the rate of release of the anticholinergic agent is dependent on the amount of halogenated siloxane polymer in the first matrix. In some embodiments, the release rate of the anticholinergic agent from the device is controlled by controlling the degree of cross-linking present in the polymer material of the first matrix. While not being bound to any particular theory, a high degree of cross-linking would be expected to result in a lower rate of release of the anticholinergic agent from the polymer matrix. The degree of crosslinking is controlled by the amount of crosslinker or catalyst used during production of the intravaginal device. See, e.g., U.S. Patent No. 6,394,094.

[0076] In some embodiments, the release rate of the anticholinergic agent is controlled by the amount of siloxane polymer in the second matrix. In some embodiments, the release rate is controlled by both the amount of halogenated siloxane polymer in the first matrix and the amount siloxane polymer in the second matrix, wherein the siloxane polymer of the second matrix is a different polymer than the polymer of the first matrix.

[0077] In some embodiments, the release rate of the anticholinergic agent from the intravaginal device can also be controlled or modulated through the inclusion of additional agents or excipients in the polymer matrix, such as, for example, mineral oil, or fatty acid esters. In some embodiments, the release rate of the anticholinergic agent is controlled by the concentration of the anticholinergic agent in the second matrix.

[0078] In some embodiments, the release rate of the anticholinergic agent from the device is controlled by the volume of the pocket, the shape of the pocket, the thickness of the pocket wall, the degree by which the pocket wall encompasses the pocket, and/or the width of the slit in the first matrix.

[0079] In some embodiments, the amount of anticholinergic agent released from the device of the invention is determined by a qualified healthcare professional and is dependent on many factors, e.g., the anticholinergic agent, the condition to be treated, the age and/or weight of the subject to be treated, etc.

[0080] The release rate is measured *in vitro* using, e.g., the USP Apparatus Paddle 2 method. The device is placed into a 500 ml solution of 0.05 M SDS at 37 °C with a paddle speed of 50 rpm. The anticholinergic agent is assayed by methods known in the art, e.g., by HPLC.

[0081] The release rate can also be measured *in vivo*. The methods of the present invention can achieve desired pharmacokinetic profiles for the anticholinergic agent. In

some embodiments, various pharmacokinetic profiles of the anticholinergic agent, such as C_{max}, are achieved using the method of the present invention. As used herein, "C_{max}" refers to the average maximum plasma concentration of the anticholinergic agent in a subject. In some embodiments, after administration of the intravaginal device to a female, a C_{max} of 1 ng/mL to 15 ng/mL, 2 ng/mL to 14 ng/mL, 3 ng/mL to 13 ng/mL, 4 ng/mL to 12ng/mL, 5 ng/mL to 11 ng/mL, to 6 ng/mL to 10 ng/mL, to 7 ng/mL to 9 ng/mL, or 8 ng/mL of the anticholinergic agent, e.g., oxybutynin, is achieved after administration of the device to a subject. In some embodiments, a C_{max} of 2 ng/mL, 2.5 ng/mL, 3 ng/mL,3.5 ng/mL, 4 ng/mL, 4.5 ng/mL, 5 ng/mL, 5.5 ng/mL, 6 ng/mL, 6.5 ng/mL, 7 ng/mL, 7.5 ng/mL, 8 ng/mL, 8.5 ng/mL, 9 ng/mL, 9.5 ng/mL, 10 ng/mL, 10.5 ng/mL, 11 ng/mL, 11.5 ng/mL, or 12 ng/mL of the anticholinergic agent, e.g., oxybutynin, is achieved after administration of the device to a subject. In some embodiments, the C_{max} values are determined for a single individual, or are determined by taking an average of several different individuals.

[0082] In some embodiments, various pharmacokinetic profiles of the anticholinergic agent, such as T_{max}, are achieved using the method of the present invention. As used herein, "T_{max}" refers to the average time to achieve maximum blood plasma concentration of the anticholinergic agent in a subject. In some embodiments, a T_{max} is achieved 60 hours to 100 hours, 70 hours to 90 hours, or 82 hours to 86 hours after administration of the device to a subject. In some embodiments, the T_{max} values are determined for a single individual, or are determined by taking an average of several different individuals.

[0083] In some embodiments, various pharmacokinetic profiles of the anticholinergic agent, such as area under the curve (AUC) values, are achieved using the method of the present invention. As used herein, "AUC values" refer to the area under the plasma concentration of the anticholinergic agent versus time of administration curve in a female. In some embodiments, the AUC of the anticholinergic agent is 30 (h x ng/mL) to 800 (h x ng/mL), 50 (h x ng/mL) to 100 (h x ng/mL), 60 (h x ng/mL) to 90 (h x ng/mL), or 85 (h x ng/mL). In some embodiments, the AUC of the anticholinergic agent is 100 (h x ng/mL) to 300 (h x ng/mL), 150 (h x ng/mL) to 250 (h x ng/mL), or 220 (h x ng/mL).

[0084] The methods of the present invention can also achieve desired pharmacokinetic profiles for a metabolite of the anticholinergic agent. For example, a known metabolite of oxybutynin is N-desethyloxybutynin.

[0085] In some embodiments, various pharmacokinetic profiles of a metabolite of the anticholinergic agent, such as C_{max}, are achieved using the method of the present invention. As used herein, "C_{max}" refers to the average maximum plasma concentration of the metabolite of the anticholinergic agent in a subject. In some embodiments, a C_{max} of 1 ng/mL to 15 ng/mL, 2 ng/mL to 14 ng/mL, 3 ng/mL to 13 ng/mL, 4 ng/mL to 12ng/mL, 5 ng/mL to 11 ng/mL, to 6 ng/mL to 10 ng/mL, to 7 ng/mL to 9 ng/mL, or 8 ng/mL of an anticholinergic metabolite, e.g., N-desethyloxybutynin, is achieved after administration of the device to a subject. In some embodiments, a C_{max} of 2 ng/mL, 2.5 ng/mL, 3 ng/mL, 3.5 ng/mL, 4 ng/mL, 4.5 ng/mL, 5 ng/mL, 5.5 ng/mL, 6 ng/mL, 6.5 ng/mL, 7 ng/mL, 7.5 ng/mL, 8 ng/mL, 8.5 ng/mL, 9 ng/mL, 9.5 ng/mL, 10 ng/mL, 10.5 ng/mL, 11 ng/mL, 11.5 ng/mL, or 12 ng/mL of an anticholinergic agent metabolite, e.g., N-desethyloxybutynin, is achieved after administration of the device to a subject. In some embodiments, the C_{max} values are determined for a single individual, or are determined by taking an average of several different individuals.

[0086] In some embodiments, various pharmacokinetic profiles of a metabolite of the anticholinergic agent, such as T_{max}, are achieved using the method of the present invention. As used herein, "T_{max}" refers to the average time to achieve maximum blood plasma concentration of a metabolite of the anticholinergic agent in a female. In some embodiments, a T_{max} of 60 hours to 100 hours, 70 hours to 90 hours, or 82 hours to 86 hours of a metabolite of the anticholinergic agent is achieved after administration of the device to a subject. In some embodiments, the T_{max} values are determined for a single individual, or are determined by taking an average of several different individuals.

[0087] In some embodiments, various pharmacokinetic profiles of a metabolite of the anticholinergic agent, such as area under the curve (AUC) values, are achieved using the method of the present invention. As used herein, "AUC values" refer to the area under the plasma concentration of a metabolite of the anticholinergic agent versus time of administration curve in a subject. In some embodiments, the AUC of a metabolite of the anticholinergic agent is 30 (h x ng/mL) to 800 (h x ng/mL), 50 (h x ng/mL) to

250 (h x ng/mL), 100 (h x ng/mL) to 200 (h x ng/mL), or 140 (h x ng/mL) to 190 (h x ng/mL).

[0088] In some embodiments, the ratio of the N-desethyloxybutynin/oxybutynin AUC values in a subject is 0.5 to 2.5, or 0.8 to 2.

[0089] In some embodiments, the present invention is directed to methods of site specific drug delivery to the vaginal and/or urogenital tract, and the treatment of any disease in which absorption of an anticholinergic agent in the vaginal and/or urogenital tract is beneficial. In some embodiments, the intravaginal device of the present invention is administered alone or in conjunction with other medications or pharmaceutical compositions.

[0090] The present invention is further illustrated by the following Examples. These Examples are provided to aid in the understanding of the invention and are not to be construed as a limitation thereof.

EXAMPLES

Example 1

PRODUCTION OF A FIRST MATRIX VAGINAL RING

[0091] A vaginal ring comprising a first matrix was prepared as follows. The first matrix was prepared using trifluoropropylmethyl/dimethyl siloxane. 40 g part A and 40 g part B trifluoropropylmethyl/dimethyl siloxane elastomer formation (NuSil Technology, CF2-3521 grade, Toms River, NJ) were weighed into a 100 g capacity Hauschild mixing cup and subsequently mixed for 10 seconds in a Hauschild Model 501 T speed mixer. A metal spatula was then used to scrape down the sides of the mixing cup and further blend the two starting components. A final 14-second speed mixer cycle was supplied to ensure blend uniformity.

[0092] Two halves of an insert mold capable of forming a pocket and a pocket wall having a uniform thickness, were lightly coated in an ethanol/water solution of DARVAN WAQ (R.T. Vanderbilt Co., Norwalk, CT) and allowed to air dry. Between 12-15 grams of the 1:1 part A:part B blend were placed into the pin containing half of the mold. The insert pins were positioned in the filled portion of the mold and matched unfilled mold half was mated into place.

[0093] The filled mold assembly was then compressed between the unheated platens of a Kuntz injection molding machine in order to discharge excess polymer blend from the mold. During this compression step, the insert pins were held in place to avoid ejection by the applied air pressure. The discharged blend material was removed from the outside of the mold assembly and discarded.

[0094] The compressed, filled mold assembly was then placed between the preheated platens of a model 3912 Carver press. A pressure of 5,000 psi was applied and heating of the assembly for 15 minutes at 150 °C was performed to affect elastomer cure. During approximately the first 5 minutes of this curing step, the insert pins were held in place to avoid ejection from the mold.

[0095] After 15 minutes at 150 °C, the mold was removed from the Carver press and cooled on the Kuntz machine's chiller for a sufficient time to allow easy separation of the mold halves and facilitate handling. The cured ring was separated from the mold. The insert pins were then carefully removed from the molded part by gently pulling them out without tearing or otherwise deforming the pocket.

[0096] This process resulted in a vaginal ring formed by mold compression having an annular first matrix comprising a pocket and a pocket wall, wherein the pocket wall has a uniform thickness, and wherein the pocket wall encompasses the pocket.

Example 2

PRODUCTION OF A TWO-MATRIX VAGINAL RING

[0097] The pocket of the annular first matrix of a trifluoropropylmethyl/dimethyl siloxane elastomer prepared according to Example 1 was filled with a silicone/oxybutynin second matrix.

[0098] To form the second matrix, a mixture of 55% silicone and 45% oxybutynin was weighed in a Hauschild mixing cup and mixed in a Hauschild model AM 501 T speed mixer. A sufficient amount of the resulting silicone/oxybutynin paste was injected via syringe into the pocket of the ring of Example 1. In order to achieve a vaginal ring which released 4 mg/day oxybutynin, a vaginal ring comprising a first matrix having an outer diameter of 58.3 mm with a pocket that extended 80° around the exterior perimeter of the ring was used. The pocket had a diameter of 5.3 mm and was filled via syringe with the

silicone/oxybutynin mixture. In order to achieve a vaginal ring which released 6 mg/day oxybutynin, a vaginal ring comprising a first matrix having an outer diameter of 58.3 mm with a pocket that extended 120° around the exterior perimeter of the ring was used. The pocket had a diameter of 5.3 mm. The ring was cured for 24 hours at ambient conditions to allow the silicone/oxybutynin polymer paste to solidify. The second matrix was held in the pocket of the first matrix by the pocket wall extending over the lateral surface area of the pocket. The silicone/oxbutynin mixture cured into a white cylindrically shaped solid, following the shape of either the 80° or 120° pocket.

[0099] This process resulted in an intravaginal ring having an annular first matrix comprising a pocket and a pocket wall, wherein the pocket wall has a uniform thickness, and wherein the pocket wall encompasses the pocket and a second matrix comprising an oxybutynin/silicone mixture contained in the pocket.

Example 3

PHARMACOKINETICS AND DRUG METABOLISM IN ANIMALS

[00100] A study was conducted to determine the levels of oxybutynin and its active metabolite, N-desethyloxybutynin, present in plasma following oral and intravaginal administration of oxybutynin in dogs. Results from this study are presented in Table 1.

Table 1. Oxybutynin Vaginal Ring vs Oxybutynin Chloride oral Tablet: Dose Comparison of C_{max} and T_{max}

Dosage Form	Dose	C_{max} (ng/mL)
Oxybutynin Chloride tablet	8 x 5 mg/day	25.6
	2 x 5 mg/day	17.90
Oxybutynin vaginal ring	2.5 mg/day	13.95
	6.0 mg/day	18.75

[00101] A 14 day study was conducted, where 8 young adult females were randomly assigned to 4 groups of 2 dogs each. Two dogs received an oral 10 mg dose of oxybutynin chloride daily (2 x 5 mg/day tablets) for 14 consecutive days. The remaining 6 dogs received an intravaginal ring as described in Example 2, designed to continuously release oxybutynin at a dose of 0, 2.5 or 6 mg/day for 14 consecutive days.

[00102] Oxybutynin was detected in the plasma of dogs who were administered oxybutynin either orally or vaginally at all intervals tested. The average maximum (C_{max}) plasma levels of oxybutynin were slightly higher and were achieved sooner in dogs with the 6 mg/day vaginal rings (approximately 18.75 ng/mL at 1.5 hours (h) after dosing) than in dogs given oxybutynin orally (approximately 17.9 ng/mL at 3 h after dosing). The C_{max} values achieved for the 2.5 mg/day vaginal rings were slightly lower (approximately 13.95 ng/mL at 1.5 h after dosing).

[00103] Plasma levels of oxybutynin were sustained for up to 96 h after insertion of the vaginal ring (approximately 4.4 ng/mL and 11.6 ng/mL for dogs with 2.5 and 6.0 mg/day vaginal ring, respectively), but decreased rapidly when administered orally (to $\leq$2.75 ng/mL at 8 h or more after dosing). This data suggests that the area under the curve ("AUC") values achieved with the 6 mg/day oxybutynin vaginal rings are slightly higher than those achieved after oral administration of 10 mg/day of oxybutynin chloride.

[00104] The amount of N-desethyloxybutynin detected in the plasma was consistently low (less than 1 ng/mL) for dogs given either concentration of oxybutynin vaginal rings. In contrast, the amount of N-desethyloxybutynin detected in plasma of dogs given oxybutynin chloride orally was generally similar to the amount of oxybutynin that was measured.

[00105] These findings suggest that the 6 mg/day oxybutynin vaginal rings delivered similar, but more sustained amounts of oxybutynin to the plasma than oral administration of 10 mg/day oxybutynin chloride, while plasma levels of N-desethyloxybutynin were consistently lower in the vaginal ring relative to the oral administration.

Example 4

PHARMACOKINETICS AND DRUG METABOLISM IN HUMANSTwo studies were conducted to measure plasma oxybutynin and N-desethyloxybutynin concentrations over 7 days after insertion of oxybutynin vaginal rings releasing oxybutynin 2 mg/day, 4 mg/day, and 6 mg/day (as described in Example 2) in 8 healthy women, aged 45 to 62 years. Results of these studies are shown in Table 2 and Table 3, respectively.

Table 2. Pharmacokinetic Parameters for Oxybutynin: 2 mg/day Oxybutynin Vaginal Ring Treatment Group: Pharmacokinetic Evaluable Patients

Parameters	N	Mean	SD	Median	Min-Max
Observed					
C_{max} (ng/mL)	8	4.10	1.13	3.87	2.67-6.42
T_{max} (h)	8	84.00	18.14	96.00	48.00-96.00
Estimated					
C_{ss} (ng/mL)	8	3.562	1.017	3.58	2.03-5.02
t_{ss} (h)	8	46.64	18.29	46.37	26.97-86.02
AUC_{ss}(24 h) (h x ng/mL)	8	85.48	24.41	86.04	48.71-120.49
rate	5	0.06	0.02	0.06	0.04-0.08

T_{max}- time to maximum concentration; C_{ss}- concentration at steady state; t_{ss}- time to reach steady state; AUC_{ss}- area under the cure at steady state.

Table 3. Pharmacokinetic Parameters for Oxybutynin: 4 mg/day Oxybutynin Vaginal Ring Treatment Group: Pharmacokinetic Evaluable Patients

Parameters	N	Mean	SD	Median	Min-Max
Observed					
Cmax (ng/mL)	7	10.66	10.26	7.61	4.95-33.80
T_{max} (h)	7	75.43	25.66	72.00	24.00-96.00
Estimated					
C_{ss} (ng/mL)	7	9.29	7.26	7.24	4.54-25.36
t_{ss} (h)	7	89.35	64.84	71.29	15.70-218.28
AUC_{ss} (24 h) (h x ng/mL)	7	222.89	174.25	173.74	108.99-608.52
rate	5	0.05	0.06	0.03	0.01-0.15

T_{max}- time to maximum concentration; C_{ss}- concentration at steady state; t_{ss}- time to reach steady state; AUC_{ss}- area under the cure at steady state.

[00106] Blood samples were drawn at designated time points over a period of 96 h and on Day 7. Pharmacokinetics data used in the analysis include values obtained through the 96 h time point. As indicated in Tables 2 and 3, the mean C_{max} for oxybutynin was 4.1 ng/mL (median 3.9 ng/mL) in the 2 mg/day oxybutynin vaginal ring treatment group and 10.7 ng/mL (median 7.6 ng/mL) in the 4 mg/day oxybutynin vaginal ring treatment group. All patients in both treatment groups experienced an initial peak in their plasma oxybutynin concentrations between 1.5 h and 6 h.

[00107] For N-desethyloxybutynin, pharmacokinetic analysis identical to that completed for oxybutynin was undertaken. Results for the 2 mg/day oxybutynin vaginal ring and 4 mg/day oxybutynin vaginal ring treatment groups are presented in Tables 4 and 5, respectively.

Table 4. Pharmacokinetic Parameters for N-desethyloxybutynin: 2 mg/day Oxybutynin Vaginal Ring Treatment Group: Pharmacokinetic Evaluable Patients

Parameters	N	Mean	SD	Median	Min-Max
Observed					
C_{max} (ng/mL)	8	6.60	2.47	6.78	2.10-10.05
T_{max} (h)	8	75.00	15.38	72.00	48.00-96.00
Estimated					
C_{ss} (ng/mL)	8	6.26	2.33	6.88	1.68-8.47
t_{ss} (h)	8	66.60	49.21	50.49	18.11-173.32
AUC_{ss} (24 h) (h x ng/mL)	8	150.21	55.88	165.05	40.35-203.16
rate	7	0.05	0.040	0.04	0.01-0.13
T_{max}- time to maximum concentration; C_{ss}- concentration at steady state; t_{ss}- time to reach steady state; AUC_{ss}- area under the cure at steady state.					

Table 5. Pharmacokinetic Parameters for N-desethyloxybutynin: 4 mg/day Oxybutynin Vaginal Ring Treatment Group: Pharmacokinetic Evaluable Patients

Parameters	N	Mean	SD	Median	Min-Max
Observed					
C_{max} (ng/mL)	7	7.82	3.43	6.73	4.67-14.49
T_{max} (h)	7	82.29	18.88	96.00	48.00-96.00
Estimated					
C_{ss} (ng/mL)	7	7.48	3.48	6.45	3.72-14.33
t_{ss} (h)	7	63.39	32.44	57.71	31.08-128.79
AUC_{ss} (24 h) (h x ng/mL)	7	179.49	83.46	154.90	89.26-343.84
rate	7	0.04	0.02	0.04	0.02-0.07

T_{max}- time to maximum concentration; C_{ss}- concentration at steady state; t_{ss}- time to reach steady state; AUC_{ss}- area under the cure at steady state.

[00108] Table 6 and Table 7, respectively, summarize the results of the analysis of the mean C_{max} for oxybutynin was 8.9 ng/mL (median 8.9 ng/mL) in the 6 mg/day oxybutynin vaginal ring treatment group.

Table 6. Pharmacokinetic Parameters for Oxybutynin Vaginal Ring 6 mg/day: Pharmacokinetic Evaluable Patients

Parameters	N	Mean	SD	Median	Min-Max
Observed					
C_{max} (ng/mL)	8	8.90	1.84	8.94	6.31-11.80
T_{max} (h)	8	66.00	24.84	72.00	24.00-96.00
Estimated					
C_{ss} (ng/mL)	8	7.59	1.56	7.64	5.28-9.49
t_{ss} (h)	8	23.66	9.78	22.55	13.14-41.63
t (½ C_{ss}) (h)	8	2.63	4.12	1.21	0.61-12.76
$^{A}UC_{ss}$ (24 h) (h x ng/mL)	8	182.06	37.45	183.35	126.65-227.76
rate	8	0.11	0.04	0.11	0.055-0.18

Table 7. Pharmacokinetic Parameters for N-desethyloxybutynin Oxybutynin Vaginal Ring 6 mg/day: Pharmacokinetic Evaluable Patients

Parameters	N	Mean	SD	Median	Min-Max
Observed					
C_{max} (ng/mL)	8	16.23	4.7802	16.70	7.79-22.48
T_{max} (h)	8	82.50	21.6927	96.00	36.00-96.00
Estimated					
C_{ss} (ng/mL)	8	15.21	5.03	15.21	6.70-21.90
t_{ss} (h)	8	56.24	31.30	44.36	25.38-115.54
t(½ C_{ss}) (h)	8	13.51	8.45	9.27	5.59-25.89
AUC_{ss} (24 h) (h x ng/mL)	8	365.04	120.63	365.10	160.78-525.63
rate	8	0.05	0.02	0.05	0.02-0.09

[00109] In these studies, seven patients experienced an initial peak in their plasma oxybutynin concentrations between 1 and 5 h. Higher concentrations of oxybutynin were reached relative to concentrations of N-desethyloxybutynin for up to approximately 4 hours after vaginal ring insertion. After 6 h, concentrations of N-desethyloxybutynin were higher than oxybutynin concentrations in most cases, and concentrations of

N-desethyloxybutynin continued to gradually rise until 72 h, while oxybutynin concentrations stabilized after 48 h.

[00110] The combined pharmacokinetics data suggest that 6 mg/day oxybutynin vaginal rings show a modest increase in plasma concentration of oxybutynin (measured by C_{max} and C_{ss}) over 4 mg/day oxybutynin vaginal rings. The 6 mg/day oxybutynin vaginal rings is further associated with an increase in the plasma concentration of N-desethyloxybutynin over that of the 4 mg/day oxybutynin vaginal rings.

Example 5

PLASMA OXYBUTYNIN CONCENTRATIONS FROM VAGINAL ADMINISTRATION

[00111] A preliminary clinical trial compared median plasma oxybutynin concentrations from 2 mg/day, 4 mg/day, and 6 mg/day oxybutynin vaginal ring treatment groups over a 4 week period. Results are summarized in Table 8.

Table 8. Comparative Pharmacokinetics for 2 mg/day, 4 mg/day, and 6 day/mg Oxybutynin Vaginal Ring Treatment Groups

	2 mg/day oxybutynin vaginal ring	**4 mg/day oxybutynin vaginal ring**	**6 mg/day oxybutynin vaginal ring**
Treatment Period 1			
Week 1	2.53 ng/mL	4.67 ng/mL	6.33 ng/mL
Week 3	2.96 ng/mL	4.28 ng/mL	7.02 ng/mL
Week 4	2.50 ng/mL	4.29 ng/mL	6.93 ng/mL
Treatment Period 2			
Week 4	2.51 ng/mL	4.26 ng/mL	7.00 ng/mL
(Median plasma concentration of oxybutynin)			

Example 6

COMPARISON OF STEADY STATE OXYBUTYNIN AND METABOLITE PLASMA LEVELS OF VAGINAL ADMINISTRATION VERSUS ORAL AND TRANSDERMAL ADMINISTRATION

[00112] A comparison of the steady state oxybutynin and metabolite plasma levels to those reported for the marketed overactive bladder (OAB) products OXYTROL® 3.9 mg/day (transdermal patch, Watson Pharmaceutical, Inc., Morristown, New Jersey) and DITROPAN XL® 15 mg/day (extended release oral tablet, Ortho-McNeil-Janssen Pharmaceutical, Inc., Titusville, New Jersey) was conducted in order to estimate efficacy and safety parameters. Results are presented in Table 9.

Table 9. Comparative Pharmacokinetics for Oxybutynin Vaginal Ring, Extended Release Oxybutynin Chloride Oral Tablets and Transdermal Oxybutynin

	Oxybutynin Mean C_{ss} (ng/mL)	**N-Desethyloxybutynin Mean C_{ss} (ng/mL)**	**Ratio N-Desethyloxybutynin/ Oxybutynin (area under the curve)**
Vaginal ring 2mg/day	3.6	6.3	1.8
Vaginal ring 4 mg/day	9.3	7.5	0.8
Vaginal ring 6 mg/day	7.6	15.2	2.0
DITROPAN XL® oxybutynin chloride oral tablets	3.0 – 3.5	13.2 – 14.2	4.1
OXYTROL® oxybutynin 3.9 mg/day	3.1 – 5.4	3.8 – 6.3	1.2

[00113] Pharmacokinetic data from the oxybutynin vaginal rings was compared to pharmacokinetic data published for DITROPAN XL® extended release oral tablets and the transdermal OXYTROL® system. The oxybutynin vaginal ring produced plasma level of oxybutynin comparable to or slightly higher than those reported for DITROPAN XL® and OXYTROL® (depending on the specific oxybutynin release rate for the vaginal ring being evaluated). Plasma levels of N-desethyloxybutynin in vaginal ring-treated patients were generally lower than those reported for DITROPAN XL® extended release tablets but higher than those reported for OXYTROL®. For the 4 mg/day oxybutynin vaginal ring, the steady state oxybutynin level was similar to that reported for OXYTROL® and DITROPAN XL®. The metabolite N-desethyloxybutynin level of the 4 mg/day oxybutynin vaginal ring was similar to OXYTROL® but substantially lower than the N-desethyloxybutynin level reported for DITROPAN XL®. For the 6 mg/day oxybutynin vaginal ring, the steady state oxybutynin level was higher than that produced by either the Oxytrol® 3.9 mg/day patch or DITROPAN XL® 15 mg/day tablet. The metabolite N-desethyloxybutynin level was higher for the 6 mg/day oxybutynin vaginal ring than

OXYTROL® but was still lower than the N-desethyloxybutynin level produced by DITROPAN XL®. These findings are reflected in the area under the curve ratios of N-desethyloxybutynin:oxybutynin, where oxybutynin vaginal ring ratios were similar to the ratios reported for the transdermal system but substantially lower than ratios for the extended release tablets.

Example 7

STUDY OF THE SAFETY AND EFFICACY OF 4 MG/DAY and 6 MG/DAY OXYBUTYNIN VAGINAL RING

[00114] A randomized, placebo-controlled clinical trial was conducted to study the safety and efficacy of an oxybutynin vaginal ring releasing either 4 mg/day, 6 mg/day (as described in Example 2) or placebo for the treatment of overactive bladder in women who had symptoms of predominant or pure urge incontinence, urinary urgency, or increased urinary frequency.

[00115] 445 subjects entered the Treatment Period. The study included four periods: a Screening Period of up to two weeks, a single-blind three-week Placebo Run-In Period, a 12-week double-blind Treatment Period, and a two week Follow-up Period. There was one screening visit followed by 8 other clinic visits: two visits during the Placebo Run-In (Visit 1 (Placebo Run-In Week 1), Visit 2 (Placebo Run-In Week 3)) and five visits during the Treatment Period (Visit 3 (Baseline), Visit 4 (Treatment Week 1), Visit 5 (Treatment Week 4), Visit 6 (Treatment Week 8) and Visit 7 (Treatment Week 12)). There was a follow-up visit two weeks after the last Treatment Period visit (Visit 8 (Follow-up)). Randomization occurred at Visit 1 (start of single-blind Placebo Run-In) to ensure that subjects received visually matching Placebo and Treatment period vaginal rings. The subjects were separated into three treatment groups, either the 4 mg/day oxybutynin vaginal ring group, the 6 mg/day oxybutynin vaginal ring group, or a placebo vaginal ring group.

[00116] During the study, four vaginal rings were inserted. Each used vaginal ring was replaced by a new vaginal ring at a scheduled time. Ring 1 was inserted at the start of Placebo Run-In period. Insertion was maintained throughout the three week Placebo Run-In period. Ring 2 was inserted at Visit 3 (Baseline). The vaginal ring was replaced

one month thereafter: Ring 3 was inserted at Visit 5 (Treatment Week 4) and Ring 4 was inserted at Visit 6 (Treatment Week 8). This final vaginal ring was removed at Visit 7 (Treatment Week 12/Premature Discontinuation).

[00117] 384 subjects (132 on the 4 mg/day oxybutynin vaginal ring, 119 on the 6 mg/day oxybutynin vaginal ring, and 133 on placebo vaginal ring) were included in the intention-to-treat (ITT) cohort, having provided baseline data and at least one valid post-baseline assessment of the number of incontinence episodes. The modified intent-to- treat cohort (MITT) consisted of ITT patients who met all three criteria for the definition of overactive bladder at baseline (Visit 3), i.e., predominant or pure urge incontinence consisting of ≥10 pure or predominant discrete urge incontinence episodes per week, and average urinary frequency of ≥8 voids per 24 hours and average total void of ≤ 3.9 L per 24 hours. The MITT cohort included 323 subjects. The PPC cohort further excluded patients with significant protocol deviations. Among the 384 ITT patients, 61 patients were excluded from the MITT cohort because they failed to meet at least one of the criteria at baseline.

[00118] Dose selection for this study was established by pharmacokinetic studies conducted with the oxybutynin vaginal ring at doses of 2 mg/day, 4 mg/day, and 6 mg/day. See Examples 4 and 5.

[00119] The primary measure of efficacy was the change from Visit 3 (Baseline) to Visit 7 (Treatment Week 12 Premature Discontinuation) in the total weekly number of incontinence episodes (stress plus urge), calculated by converting the total number of incontinence episodes (stress plus urge) occurring during the 3 consecutive OAB diary days prior to Visits 3 and 7 to a weekly-based number of episodes. Secondary efficacy measurements included the change from Visit 3 (Baseline) to Visit 7 (Treatment Week 12 /Premature Discontinuation) for the following: average daily urinary frequency, the proportion of subjects with no incontinence episodes recorded in the final 3-day diary, the average void volume, and average severity of urgency.

[00120] The baseline characteristics number and percentage of subjects assigned to each of the analysis cohorts by treatment group are shown in Table 10.

Table 10. Subject Baseline Characteristics

	Placebo	Oxy 4 mg	Oxy 6 mg	Total
Intent-to-Treat (ITT)	133	132	119	384
Modified ITT (MITT)	112	115	96	323
Exclusion from MITT*	21	17	23	61
Baseline Incontinence	10	7	8	25
Baseline Urinary Frequency	5	8	8	21
Baseline Void Volume	7	2	8	17
Per-Protocol Completers (PPC)	71	81	64	216
Exclusion from PPC*	41	34	32	107
Did Not Complete Study	7	5	6	18
Visit 7 Occurred Before Day 74	3	1	0	4
Use of Prohibited Medications**	34	28	24	86
Protocol Deviations	2	7	5	14

*A subject may be excluded due to more than one deviation.
** Based on verified list of prohibited medications.

[00121] Among the 384 ITT subjects, 61 subjects (15.9%) were excluded from the MITT cohort because they failed to meet at least one of the following criteria at baseline: > 10 incontinence episodes per week, an average urinary frequency < 8 voids per day, and an average total void volume < 3.0 liters per day. A total of 25 of the 61 excluded subjects (41%) had < 10 incontinence episodes at baseline, 21 subjects (34.4%) had urinary frequency of < 8 voids per day, and 17 subjects (27.9%) had void volume > 3.0 liters per day.

[00122] The Per-Protocol Completers (PPC) cohort consisted of 56.3% of the number of subjects included in the ITT cohort (216 PPC compared to 384 ITT subjects) and 66.9% of the number of MITT subjects (216 of 323 MITT subjects). Subjects excluded from the PPC Cohort (86 subjects) included those who violated study procedures.

[00123] Table 11 summarizes the results of the analysis of the mean reduction in the number of incontinence episodes from baseline to the end of treatment for the ITT cohort.

Table 11 Primary Outcome Analysis - ITT Cohort: Total Weekly Number of Incontinence Episodes: Change from Baseline (Visit 3) to End-of-Treatment (Visit 7)

Treatments	N	Baseline	Mean Change*	Standard Deviation	Difference**	P-Value***
OXY 4 mg	132	26.34	-15.38	16.12	-2.22	0.0613
OXY 6 mg	119	25.12	-15.18	16.24	-2.02	0.1850
Placebo Treated	133	26.44	-13.16	14.65		

* Change = Change in Total Weekly Number of Incontinence Episodes (Visit 3 to Visit 7 (or End-of-Treatment)).
** Difference = Difference between active treatment group and placebo.
*** P-Value: Significance between active treatment groups and placebo was tested on raw data analysis.

[00124] Results show both the 4 mg/day oxybutynin vaginal ring and 6 mg/day oxybutynin vaginal ring groups had greater mean reductions in the total weekly number of incontinence episodes than the placebo vaginal ring group; for the 4 mg/day oxybutynin vaginal ring group, this result approached significance ($p=0.0613$). The treatment effect observed for the 6 mg/day oxybutynin vaginal ring was approximately the same as the 4 mg/day oxybutynin vaginal ring.

[00125] Any subject with qualifying values at baseline for all three principal inclusion criteria (> 10 incontinence episodes per week, an average urinary frequency ≥ 8 voids per day, and an average total void volume ≤ 3.0 liters per day) could have been considered as presenting with an etiology of pure urgency. Therefore, in an additional evaluation of the number of incontinence episodes, defined prior to breaking the blind and before finalizing the study database, an MITT (Modified Intent-to-Treat) cohort, that included this specific group of subjects, was defined. Although not considered the principal cohort for the evaluation of efficacy, the MITT cohort could be viewed as the most representative sample of subjects with OAB since it encompassed that group with the most well-defined set of attributes associated with a clinical presentation of OAB for clinical trials of new treatments.

[00126] Table 12 highlights the efficacy analysis of the reduction in the number of incontinence episodes from baseline to the end of treatment for the MITT cohort.

Table 12. Primary Outcome Analysis - Modified MITT Group Cohort: Total Weekly Number of Incontinence Episodes: Change from Baseline (Visit 3) to End-of-Treatment (Visit 7)

Treatments	N	Baseline	Mean Change*	Standard Deviation	Difference**	P-Value***
Oxy 4 mg	115	28.34	-16.76	16.45	-2.99	0.0364
Oxy 6 mg	96	26.52	-16.70	14.30	-2.93	0.0176
Placebo	112	28.25	-13.77	14.50		

* Change = Change in Total Weekly Number of Incontinence Episodes (Visit 3 to Visit 7 (or End-of-Treatment)).
** Difference = Difference between active treatment group and placebo.
*** P-Value: Significance between active treatment groups and placebo was tested on raw data analysis.

[00127] Results suggest statistically significant treatment effects favoring the 4 mg/day and 6 mg/day oxybutynin vaginal rings over placebo in this highly symptomatic group of subjects, with the 6 mg/day oxybutynin vaginal ring exhibiting an effect that is the same as that observed for the 4 mg/day oxybutynin vaginal ring group. Thus, the lower dose of 4 mg/day was sufficient to reduce the number of total weekly incontinence episodes. The MITT cohort results may represent the most clinically meaningful outcome associated with the oxybutynin vaginal ring because subjects in this cohort met the protocol-specified definition of clinical signs and symptoms of primarily urge incontinence, i.e., at baseline (Visit 3), all MITT subjects met the required criteria for the weekly number of incontinence episodes, urinary frequency, and void volume.

[00128] The PPC cohort summary statistics support the observed treatment effects for both active oxybutynin rings doses, with the observation that the 6 mg/day ring vaginal ring appears to provide no incremental benefit above that seen for the 4 mg/day vaginal ring.

[00129] Table 13 and 14 present descriptive statistics for the ITT cohort by menopausal status. The randomization was stratified by menopausal status, but subset analysis of each group was not planned. Therefore, although p-values were calculated, they were not based on any pre-specified hypothesis. The number of pre-menopausal patients in the study was substantially fewer than the number of menopausal patients.

[00130] For pre-menopausal patients, the patients in the 6 mg/day oxybutynin vaginal ring group and placebo group responded similarly, while patients in the 4 mg/day oxybutynin

vaginal ring group did not see as great a decrease in total number of incontinence episodes.

Table 13: Primary Outcome Analysis (Pre-menopausal Patients) – ITT Cohort: Total Weekly Number of Incontinence Episodes: Change from Baseline (Visit 3) to End of Treatment (Visit 7)

Treatments	N	Baseline	Mean Change*	Standard Deviation	Difference**
4 mg/day oxybutynin ring	35	30.53	-14.73	19.49	2.38
6 mg/day oxybutynin ring	25	28.00	-17.55	18.00	-0.44
Placebo	30	27.84	-17.11	15.88	

*Change = Change in total weekly number of Incontinence Episodes (Visits 3 to Visit 7).

** Difference = Difference between active treatment group and placebo.

[00131] Menopausal patients demonstrated a larger reduction in total number of incontinence episodes when randomized to 4 mg/day and 6 mg/day oxybutynin vaginal rings as opposed to placebo.

Table 14: Primary Outcome Analysis (Menopausal Patients) – ITT Cohort: Total Weekly Number of Incontinence Episodes: Change from Baseline (Visit 3) to End of Treatment (Visit 7)

Treatments	N	Baseline	Mean Change*	Standard Deviation	Difference**
4 mg/day oxybutynin ring	97	24.82	-15.61	14.82	-3.60
6 mg/day oxybutynin ring	94	24.35	-14.55	15.78	-2.54
Placebo	103	26.03	-12.01	14.14	

*Change = Change in total weekly number of Incontinence Episodes (Visits 3 to Visit 7).

** Difference = Difference between active treatment group and placebo.

[00132] For MITT and PPC cohorts, pre-menopausal patients did not show any additional reduction in total number of incontinence episodes for the 4 mg/ml and 6 mg/day groups compared to placebo. Menopausal patients in the MITT and PPC cohorts continued to show differences in the reduction of total number of incontinence episodes for the 4 mg/day and 6 mg/day groups compared to placebo. See Tables 15 and 16.

Table 15: Primary Outcome Analysis (Pre-menopausal Patients) – MITT Cohort: Total Number of Incontinence Episodes: Change from Baseline (Visit 3) to End of Treatment (Visit 7)

Treatments	N	Baseline	Mean Change*	Standard Deviation	Difference**
4 mg/day oxybutynin ring	28	33.75	-16.33	21.10	1.40
6 mg/day oxybutynin ring	21	29.44	-17.89	19.46	-0.16
Placebo	25	29.96	-17.73	16.68	
*Change = Change in total number of Incontinence Episodes (Visits 3 to Visit 7). ** Difference = Difference between active treatment group and placebo.					

Table 16: Primary Outcome Analysis (Menopausal Patients) – MITT Cohort: Total Number of Incontinence Episodes: Change from Baseline (Visit 3) to End of Treatment (Visit 7)

Treatments	N	Baseline	Mean Change*	Standard Deviation	Difference**
4 mg/day oxybutynin ring	87	26.61	-16.90	14.79	-4.27
6 mg/day oxybutynin ring	75	25.70	-16.36	12.64	-3.73
Placebo	87	27.76	-12.63	13.71	
*Change = Change in total number of Incontinence Episodes (Visits 3 to Visit 7). ** Difference = Difference between active treatment group and placebo.					

[00133] Table 17 summarizes the findings associated with analysis for the total weekly number of incontinence episodes in the ITT cohort at each individual study visit. For the 4 mg/day oxybutynin vaginal ring, an observable treatment effect at day 28 (Visit 5) is slightly increasing at day 56 (Visit 6). This effect decreases somewhat at day 84 (Visit 7). A similar result was observed fro MITT cohort. For 6 mg/day oxybutynin vaginal ring, the initial treatment effect at day 28 was somewhat smaller at day 56, but then increased substantially at the end of treatment, for both ITT and MITT cohorts.

Table 17: Secondary Outcome Analysis - ITT Cohort:
Total Weekly Number of Incontinence Episodes (stress plus urge):
Change from Baseline (Visit 3) to Subsequence Visit

Change from Baseline to	Treatments	N	Mean Change*	Standard Deviation	Difference**	P-value***
Day 28/ Visit 5	4 mg/day oxybutynin ring	119	-12.33	13.964	-2.43	0.2553
	6 mg/day oxybutynin ring	101	-13.01	13.406	-3.11	0.0824
	Placebo	115	-9.90	13.406		
Day 56/ Visit 6	4 mg/day oxybutynin ring	118	-14.83	14.816	-2.67	0.0997
	6 mg/day oxybutynin ring	107	-13.26	15.208	-1.10	0.1252
	Placebo	118	-12.16	13.540		

*Change = Change in total weekly number of Incontinence Episodes (Visits 3 to subsequent visits).
** Difference = Difference between active treatment group and placebo.
*** P-value = Significance between active treatment group and placebo was tested on raw data analysts.

[00134] Table 18 and Table 19 summarize the findings of the total number of urge incontinence episodes for the ITT and MITT cohorts, respectively.

Table 18. Secondary Outcome Analysis - ITT Cohort:
Total Number of Urge Incontinence Episodes: Change from Baseline (Visit 3) to End-of-Treatment (Visit 7)

Treatments	N	Baseline	Mean Change*	Standard Deviation	Difference**	P-Value***
OXY 4 mg	132	24.18	-15.13	15.393	-2.80	0.0558
OXY 6 mg	119	23.06	-14.90	14.950	-2.57	0.1803
Placebo Treated	133	23.88	-12.43	14.311		

* Change = Change in Total Number of Urge Incontinence Episodes (Visit 3 to Visit 7 (or End-of-Treatment)).
** Difference = Difference between active treatment group and placebo.
*** P-Value: Significance between active treatment groups and placebo was tested on raw data analysis.

Table 19. Secondary Outcome Analysis - MITT Cohort: Total Number of Urge Incontinence Episodes: Change from Baseline (Visit 3) to End-of-Treatment (Visit 7)

Treatments	N	Baseline	Mean Change*	Standard Deviation	Difference**	P-Value***
Oxy 4 mg	115	25.99	-16.37	15.753	-3.29	0.0544
Oxy 6 mg	96	24.28	-16.38	13.380	-3.30	0.0223
Placebo	112	25.63	-13.08	14.439		

* Change = Change in Total Number of Urge Incontinence Episodes (Visit 3 to Visit 7 (or End-of-Treatment)). ** Difference = Difference between active treatment group and placebo.
*** P-Value: Significance between active treatment groups and placebo was tested on raw data analysis.

[00135] Both treatment groups demonstrated a reduction in the weekly number of urge-only incontinence episodes to a greater extent than the placebo group. Compared to placebo, the 4 mg/day oxybutynin vaginal ring ($p=0.0558$ for the ITT and $p=0.0544$ for the MITT cohort) experienced fewer urge-only incontinence episodes while the 6 mg/day oxybutynin vaginal ring in the MITT cohort ($p=0.0223$) experienced fewer urge-only incontinence episodes. As indicated for the total incontinence episode endpoint, the 6 mg/day oxybutynin vaginal ring provided no additive treatment effect compared to the 4 mg/day oxybutynin vaginal ring, but both oxybutynin vaginal rings demonstrated a greater magnitude of reduction of urge-only episodes compared to placebo for the MITT cohort (a differential reduction of 3.3 episodes greater than what was observed for placebo).

[00136] The analysis of urge incontinence episodes was investigated by menopausal status and is presented in Tables 20 and 21 for the MITT cohort. Results were consistent with what was observed when considering the primary efficacy endpoint, the total weekly number of incontinence episodes. The magnitude of the difference in the mean reduction of urge-only incontinence episodes was greater for both oxybutynin vaginal rings groups in the MITT cohort compared to the ITT cohort.

Table 20. Secondary Outcome Analysis (Pre-Menopausal Patients) – MITT Cohort:Total Number of Urge Incontinence Episodes: Change from Baseline (Visit 3) to End-of-Treatment (Visit 7)

Treatments	N	Baseline	Mean Change*	Standard Deviation	Difference**
Oxy 4 mg	28	30.17	-15.83	19.864	-0.06
Oxy 6 mg	21	27.33	-17.44	18.893	-1.67
Placebo	25	27.16	-15.77	16.924	
* Change = Change in Total Number of Urge Incontinence Episodes (Visit 3 to Visit 7 (or End-of-Treatment)). ** Difference = Difference between active treatment group and placebo.					

Table 21. Secondary Outcome Analysis (Menopausal Patients) – MITT Cohort:Total Number of Urge Incontinence Episodes: Change from Baseline (Visit 3) to End-of-Treatment (Visit 7)

Treatments	N	Baseline	Mean Change*	Standard Deviation	Difference**
Oxy 4 mg	87	24.65	-16.55	14.316	-4.24
Oxy 6 mg	75	23.43	-16.08	11.531	-3.77
Placebo	87	25.18	-12.31	13.655	
* Change = Change in Total Number of Urge Incontinence Episodes (Visit 3 to Visit 7 (or End-of-Treatment)). ** Difference = Difference between active treatment group and placebo.					

[00137] Tables 22 and 23 summarize the findings associated with analysis for the total weekly number of urge incontinence episodes in the ITT and MITT cohorts, respectively, at individual study visits. In both cohort analyses, 4 mg/day oxybutynin vaginal rings were shown to provide a relatively consistent reduction in the weekly number of urge-only episodes compared to placebo that continued through to the end of treatment. For 6 mg/day oxybutynin vaginal ring, an initial larger differential effect was observed at day 28 then diminished at day 56, which then rebounded somewhat at the end of treatment. The 6 mg/day reduction overall, however, was no greater than that observed for the 4 mg/day group.

Table 22: Secondary Outcome Analysis - ITT Cohort:
Total Weekly Number of Incontinence Episodes (urge only):
Change from Baseline (Visit 3) to subsequence visits

Change from Baseline to	Treatments	N	Mean Change*	Standard Deviation	Difference**	P-value***
Day 28/ Visit 5	4 mg/day oxybutynin ring	119	-11.90	14.178	-2.87	0.2926
	6 mg/day oxybutynin ring	101	-13.65	12.947	-4.62	0.0286
	Placebo	115	-9.03	13.277		
Day 56/ Visit 6	4 mg/day oxybutynin ring	118	-14.47	14.005	-3.08	0.0501
	6 mg/day oxybutynin ring	107	-13.69	13.273	-2.30	0.0221
	Placebo	118	-11.39	13.080		
	*Change = Change in total weekly number of Incontinence Episodes (urge only) (Visits 3 to subsequent visits). ** Difference = Difference between active treatment group and placebo. *** P-value = Significance between active treatment group and placebo was tested on raw data analysts.					

Table 23: Secondary Outcome Analysis - MITT Cohort:
Total Weekly Number of Incontinence Episodes (urge only):
Change from Baseline (Visit 3) to subsequence visits

Change from Baseline to	Treatments	N	Mean Change*	Standard Deviation	Difference**	P-value***
Day 28/ Visit 5	4 mg/day oxybutynin ring	103	-12.57	14.873	-3.09	0.0669
	6 mg/day oxybutynin ring	83	-14.56	12.804	-5.08	0.0042
	Placebo	98	-9.48	13.530		
Day 56/ Visit 6	4 mg/day oxybutynin ring	103	-15.50	14.346	-3.28	0.0359
	6 mg/day oxybutynin ring	87	-14.43	13.091	-2.21	0.0144
	Placebo	101	-12.22	12.734		
*Change = Change in total weekly number of Incontinence Episodes (urge only) (Visits 3 to subsequent visits). ** Difference = Difference between active treatment group and placebo. *** P-value = Significance between active treatment group and placebo was tested on raw data analysts.						

[00138] Table 24 summarizes the findings associated with the analysis of the change from baseline to end-of-treatment for the average daily urinary frequency in the subjects who were treated.

Table 24. Secondary Outcome Analysis - ITT Cohort:Average Daily Urinary Frequency: Change from Baseline (Visit 3) to End-of-Treatment (Visit 7)

Treatments	N	Baseline	Mean Change*	Standard Deviation	Difference**	P-Value***
OXY 4 mg	132	11.36	-1.70	2.806	-0.60	0.0722
OXY 6 mg	119	10.82	-2.03	2.771	-0.93	0.0004
Placebo Treated	133	11.24	-1.10	2.730		

* Change = Change in Average Daily Urinary Frequency (Visit 3 to Visit 7 (or End-of-Treatment)).
** Difference = Difference between active treatment group and placebo.
*** P-Value: Significance between active treatment groups and placebo was tested on raw data analysis.

[00139] All treatment groups demonstrated a statistically significant reduction in the average daily urinary frequency. In the ITT cohort, the 6 mg/day oxybutynin vaginal ring demonstrated a statistically significant reduction (p=0.0004) in average daily urinary frequency from baseline to end-of-treatment compared to placebo. The 4 mg/day oxybutynin vaginal ring also demonstrated reduction in average daily urinary frequency when compared to placebo that approached significance (p=0.0722).

[00140] Analysis for the MITT cohort (Table 25) yielded similar results.

Table 25. Secondary Outcome Analysis - MITT Cohort: Average Daily Urinary Frequency: Change from Baseline (Visit 3) to End-of-Treatment (Visit 7)

Treatments	N	Baseline	Mean Change*	Standard Deviation	Difference**	P-Value***
Oxy 4 mg	115	11.60	-1.80	2.839	-0.7	0.1039
Oxy 6 mg	96	11.01	-2.10	2.918	-1.0	0.0020
Placebo	112	11.32	-1.10	2.746		

* Change = Change in Average Daily Urinary Frequency (Visit 3 to Visit 7 (or End-of-Treatment)).
** Difference = Difference between active treatment group and placebo.
*** P-Value: Significance between active treatment groups and placebo was tested on raw data analysis.

[00141] Analysis of average void volume in mL for the ITT and MITT cohorts is presented in Tables 26 and 27, respectively. In both cohorts, all three treatment groups showed very little difference in daily average void volume from baseline (Visit 3) to End-

of-treatment. Neither the 4 mg/day nor the 6 mg/day significantly increased daily average void volume compared to placebo.

Table 26. Secondary Outcome Analysis - ITT Cohort: Daily Average Void Volume: Change from Baseline (Visit 3) to End-of-Treatment (Visit 7)

Treatments	N	Baseline	Mean Change*	Standard Deviation	Difference**	P-Value***
Oxy 4 mg	131	1597.89	-73.55	523.862	19.77	0.6300
Oxy 6 mg	117	1712.96	-108.03	632.052	-14.71	0.7372
Placebo	132	1750.64	-93.32	646.620		

* Change = Change in Average Daily Average Void Volume (Visit 3 to Visit 7 (or End-of-Treatment)).
** Difference = Difference between active treatment group and placebo.
*** P-Value: Significance between active treatment groups and placebo was tested on raw data analysis.

Table 27. Secondary Outcome Analysis - MITT Cohort: Daily Average Void Volume: Change from Baseline (Visit 3) to End-of-Treatment (Visit 7)

Treatments	N	Baseline	Mean Change*	Standard Deviation	Difference**	P-Value***
Oxy 4 mg	114	1630.60	-100.75	487.074	-58.86	0.3969
Oxy 6 mg	94	1632.90	-55.42	587.371	-13.53	0.8301
Placebo	111	1627.5	-41.89	564.552		

* Change = Change in Average Daily Void Volume (Visit 3 to Visit 7 (or End-of-Treatment)).
** Difference = Difference between active treatment group and placebo.
*** P-Value: Significance between active treatment groups and placebo was tested on raw data analysis.

[00142] Table 28 summarizes the findings associated with analysis of the change from baseline to end-of-treatment for the average void volume per void in the subjects who were treated.

Table 28. Secondary Outcome Analysis - ITT Cohort: Average Void Volume Per Void: Change from Baseline (Visit 3) to End-of-Treatment (Visit 7)

Treatments	N	Baseline	Mean Change*	Standard Deviation	Difference**	P-Value***
OXY 4 mg	131	53.06	5.19	15.398	3.44	0.2134
OXY 6 mg	117	59.49	7.07	19.821	5.32	0.0126

Treatments	N	Baseline	Mean Change*	Standard Deviation	Difference**	P-Value***
Placebo Treated	132	58.63	1.75	16.981		

* Change = Change in Average Void Volume Per Void (Visit 3 to Visit 7 (or End-of-Treatment)).
** Difference = Difference between active treatment group and placebo.
*** P-Value: Significance between active treatment groups and placebo was tested on raw data analysis.

[00143] The 6 mg/day oxybutynin vaginal ring demonstrated a significantly greater increase in the average volume per void as compared to placebo. The 4 mg/day oxybutynin vaginal ring also demonstrated a reduction, although not significant, in the average volume per void as compared to placebo.

[00144] Tables 29 and 30 summarize the findings associated with analysis of the change from baseline to end-of-treatment for the average severity of urgency in the ITT and MITT cohorts, respectively.

Table 29. Secondary Outcome Analysis - ITT Cohort: Average Severity of Urgency: Change from Baseline (Visit 3) to End-of-Treatment (Visit 7)

Treatments	N	Baseline	Mean Change*	Standard Deviation	Difference**	P-Value***
OXY 4 mg	132	18.78	-3.59	6.648	-1.01	0.2234
OXY 6 mg	118	17.90	-4.38	6.493	-1.80	0.0065
Placebo Treated	133	18.57	-2.58	5.663		

* Change = Change in Average Daily Severity of Urgency (Visit 3 to Visit 7 (or End-of-Treatment)).
** Difference = Difference between active treatment group and placebo.
*** P-Value: Significance between active treatment groups and placebo was tested on raw data analysis.

Table 30. Secondary Outcome Analysis - MITT Cohort: Average Severity of Urgency: Change from Baseline (Visit 3) to End-of-Treatment (Visit 7)

Treatments	N	Baseline	Mean Change*	Standard Deviation	Difference**	P-Value***
Oxy 4 mg	115	19.26	-3.59	6.505	-1.16	0.2730
Oxy 6 mg	96	18.07	-4.20	6.805	-1.77	0.0261
Placebo	112	18.59	-2.43	5.461		

* Change = Change in Average Daily Severity of Urgency (Visit 3 to Visit 7 (or End-of-Treatment)).
** Difference = Difference between active treatment group and placebo.
*** P-Value: Significance between active treatment groups and placebo was tested on raw data analysis.

[00145] In the ITT cohort, both oxybutynin vaginal ring groups showed differentially greater reductions compared to placebo; for 6 mg/day oxybutynin vaginal ring, this difference was statistically significant (p=0.0065). The MITT cohort gave similar results to the ITT cohort.

[00146] Tables 31 and 32 summarize the findings associated with analysis of the proportion of subjects with no incontinence episodes recorded in the Final 3-day diary at the end-of treatment visit for the ITT and MITT cohorts, respectively.

Table 31. Secondary Outcome Analysis - ITT Cohort: Proportion of Subjects with no Incontinence Episodes Recorded in Final 3-Day Diary

Treatments	%	P-Value*
Oxy 4 mg	(35/132) 26.52%	0.1476
Oxy 6 mg	(35/119) 29.41%	0.0602
Placebo	(25/133) 18.80%	
* Based on stratified Cochran-Mantel-Haenszel tests between active treatment and placebo.		

Table 32. Secondary Outcome Analysis – MITT Cohort: Proportion of Subjects with no Incontinence Episodes Recorded in Final 3-Day Diary

Treatments	%	P-Value*
Oxy 4 mg	(29/115) 25.22%	0.0258
Oxy 6 mg	(25/96) 26.04%	0.0269
Placebo	(15/112) 13.39%	
* Based on stratified Cochran-Mantel-Haenszel tests between active treatment and placebo.		

[00147] In the ITT cohort, both 4 mg/day oxybutynin vaginal ring (26.52%) and 6 mg/day oxybutynin vaginal ring (29.41%) had larger proportions of subjects compared to placebo (18.80%) who reported no incontinence episodes at the end-of-treatment Visit. For the MITT cohort, the proportions of subjects reporting no incontinence episodes at the end of treatment was substantially less for subjects receiving placebo (13.39%), leading to statistically significant differences favoring both 4 mg/day oxybutynin vaginal ring (p=0.0258) and 6 mg/day oxybutynin vaginal ring (p=0.0269).

[00148] Visual Analogue Scale (VAS) was recorded using a 100 mm scale, marked off in 10 segments. One end of the scale had the anchor "absence of symptoms" while the other

end had the anchor "unbearable symptoms." The patients were asked to circle a line on the scale indicating the best reflection of her subjective symptoms associated with overactive bladder overlooking the time window of the last 4 weeks, with 1 being the best and 10 being the worst.

[00149] Results of the analysis in VAS from baseline (visit 3) to End-of-Treatment for the ITT cohort are present in Table 33. For the ITT cohort, both the 4 mg/day oxybutynin ring (p=0.0199) and the 6 mg/day oxybutynin ring (p=0.0012) achieved significance in reducing the VAS compared to placebo. Results were similar for the MITT cohort where both the 4 mg/day oxybutynin ring (p=0.0374) and the 6 mg/day oxybutynin rings (p=0.0045) achieved significance compared to placebo as well.

Table 33. Secondary Outcome Analysis - ITT Cohort:
VAS: Change from Baseline (Visit 3) to End-of-Treatment (Visit 7)

Treatments	N	Baseline	Mean Change*	Standard Deviation	Difference**	P-Value***
Oxy 4 mg	131	5.77	-1.79	2.903	-0.52	0.0199
Oxy 6 mg	117	6.43	-2.50	2.674	-1.23	0.0012
Placebo	131	6.03	-1.27	2.605		

* Change = Change in VAS (Visit 3 to Visit 7 (or End-of-Treatment)).
** Difference = Difference between active treatment group and placebo.
*** P-Value: Significance between active treatment groups and placebo was tested on raw data analysis.

[00150] Urinary Distress Inventory (UDI) was a list of 19 symptoms described by people who have bladder problems and/or who experience urine leakage. Patients filled out the UDI, indicating which symptoms they had experienced in the past 4 weeks and, of those, how bothersome they were. The scale to assess how bothersome the symptoms were ranged from 0 to 3, 0 for "not at all," 1 for "slightly", 2 for "moderately", and 3 for "greatly." Analysis results of the change from baseline (Visit 3) to end-of-treatment (Visit 7) for all 19 questions for the ITT cohort are presented below.

[00151] For the ITT cohort, statistically significant differences between the treatment groups and placebo were found in the assessment of the 6 different symptoms from the mean change from baseline (Visit 3) to end-of-treatment (Visit 7). Both the 4 mg/day and 6 mg/day oxybutynin vaginal rings achieved statistical significance compared to placebo for reducing the experience of frequent urination (4 mg/day p=0.0016, 6 mg/day p = 0.0007), the strong feeling of urgency to empty bladder (4 mg/day p =0.0277, 6 mg/day

p=0.0028), the experience of urine leakage related to the feeling of urgency (94mg/day p=0.0091, 6 mg/day p 0.0025), the experience of small amounts of urine leakage (4 mg/day p =0.0056, 6 mg/day p=0.226), and the experience of large amounts of urinary leakage (4 mg/day p=0.0260, 6 mg/day p=0.0030). For the experience of nighttime urination, 4 mg/day (p=0.0100) achieved a significant reduction compared to placebo, whereas 6 mg/day (p=0.0732) approached significance. Tables 34-52 show the analysis of each question in the UDI for the ITT cohort.

Table 34. Secondary Outcome Analysis - ITT Cohort:
UDI – Did you Experience Frequent Urination?
Change from Baseline (Visit 3) to End-of-Treatment (Visit 7)

Treatments	N	Baseline	Mean Change*	Standard Deviation	Difference**	P-Value***
Oxy 4 mg	130	1.88	-0.76	1.112	-0.31	0.0016
Oxy 6 mg	119	2.14	-0.94	1.122	-0.49	0.0007
Placebo	130	2.00	-0.45	0.943		

* Change = Change in severity of UDI – Did you Experience Frequent Urination? (Visit 3 to Visit 7 (or End-of-Treatment)).
** Difference = Difference between active treatment group and placebo.
*** P-Value: Significance between active treatment groups and placebo was tested on raw data analysis.

Table 35. Secondary Outcome Analysis - ITT Cohort:
UDI – A Strong Feeling of Urgency to Empty Bladder?
Change from Baseline (Visit 3) to End-of-Treatment (Visit 7)

Treatments	N	Baseline	Mean Change*	Standard Deviation	Difference**	P-Value***
Oxy 4 mg	131	1.79	-0.55	1.097	-0.2	0.0277
Oxy 6 mg	119	2.03	-0.77	1.093	-0.42	0.0028
Placebo	132	1.89	-0.35	0.894		

* Change = Change in severity of UDI – A Strong Feeling of Urgency to Empty Bladder?
(Visit 3 to Visit 7 (or End-of-Treatment)).
** Difference = Difference between active treatment group and placebo.
*** P-Value: Significance between active treatment groups and placebo was tested on raw data analysis.

Table 36. Secondary Outcome Analysis - ITT Cohort:
UDI – Did You Experience Urine Leakage Related to the Feeling of Urgency?
Change from Baseline (Visit 3) to End-of-Treatment (Visit 7)

Treatments	N	Baseline	Mean Change*	Standard Deviation	Difference**	P-Value***
Oxy 4 mg	132	1.76	-0.73	1.173	-0.25	0.0091
Oxy 6 mg	119	1.91	-0.87	1.062	-0.39	0.0025
Placebo	133	1.85	-0.48	1.052		

* Change = Change in severity of UDI – Did You Experience Urine Leakage Related to the Feeling of Urgency? (Visit 3 to Visit 7 (or End-of-Treatment)).
** Difference = Difference between active treatment group and placebo.
*** P-Value: Significance between active treatment groups and placebo was tested on raw data analysis.

Table 37. Secondary Outcome Analysis - ITT Cohort:
UDI – Did You Experience Urine Leakage Related to Physical Activity, Coughing or Sneezing?
Change from Baseline (Visit 3) to End-of-Treatment (Visit 7)

Treatments	N	Baseline	Mean Change*	Standard Deviation	Difference**	P-Value***
Oxy 4 mg	132	0.76	-0.14	0.898	0.1	0.5409
Oxy 6 mg	118	0.90	-0.22	0.878	0.02	0.6632
Placebo	133	0.86	-0.24	0.909		

* Change = Change in severity of UDI – Did You Experience Urine Leakage Related to Physical Activity, Coughing or Sneezing? (Visit 3 to Visit 7 (or End-of-Treatment)).
** Difference = Difference between active treatment group and placebo.
*** P-Value: Significance between active treatment groups and placebo was tested on raw data analysis.

Table 38. Secondary Outcome Analysis - ITT Cohort:
UDI – Did You Experience Urine Leakage Not Related to Urgency or Activity? Change from Baseline (Visit 3) to End-of-Treatment (Visit 7)

Treatments	N	Baseline	Mean Change*	Standard Deviation	Difference**	P-Value***
Oxy 4 mg	130	0.68	-0.16	0.922	-0.01	0.8660
Oxy 6 mg	119	0.71	-0.34	1.020	-0.19	0.1151
Placebo	131	0.65	-0.15	0.949		

* Change = Change in severity of UDI – Did You Experience Urine Leakage Not Related to Urgency or Activity? (Visit 3 to Visit 7 (or End-of-Treatment)).
** Difference = Difference between active treatment group and placebo.
*** P-Value: Significance between active treatment groups and placebo was tested on raw data analysis.

Table 39. Secondary Outcome Analysis - ITT Cohort:
UDI – Did You Experience Small Amounts of Leakage (i.e., Drops)?
Change from Baseline (Visit 3) to End-of-Treatment (Visit 7)

Treatments	N	Baseline	Mean Change*	Standard Deviation	Difference**	P-Value***
Oxy 4 mg	130	1.42	-0.57	1.092	-0.34	0.0056
Oxy 6 mg	118	1.46	-0.56	0.966	-0.33	0.0226
Placebo	133	1.32	-0.23	1.016		

* Change = Change in severity of UDI – Did You Experience Small Amounts of Leakage (i.e., Drops)? (Visit 3 to Visit 7 (or End-of-Treatment)).
** Difference = Difference between active treatment group and placebo.
*** P-Value: Significance between active treatment groups and placebo was tested on raw data analysis.

Table 40. Secondary Outcome Analysis - ITT Cohort:
UDI – Did You Experience Large Amounts of Urinary Leakage?
Change from Baseline (Visit 3) to End-of-Treatment (Visit 7)

Treatments	N	Baseline	Mean Change*	Standard Deviation	Difference**	P-Value***
Oxy 4 mg	132	1.02	-0.46	1.322	-0.06	0.0200
Oxy 6 mg	119	1.25	-0.70	1.239	-0.3	0.0030
Placebo	132	1.32	-0.40	1.043		

* Change = Change in severity of UDI – Did You Experience Large Amounts of Urinary Leakage? (Visit 3 to Visit 7 (or End-of-Treatment)).
** Difference = Difference between active treatment group and placebo.
*** P-Value: Significance between active treatment groups and placebo was tested on raw data analysis.

Table 41. Secondary Outcome Analysis - ITT Cohort:
UDI – Did You Experience Nighttime Urination
Change from Baseline (Visit 3) to End-of-Treatment (Visit 7)

Treatments	N	Baseline	Mean Change*	Standard Deviation	Difference**	P-Value***
Oxy 4 mg	130	1.54	-0.55	1.057	-0.25	0.0100
Oxy 6 mg	118	1.69	-0.54	1.107	-0.24	0.0732
Placebo	133	1.63	-0.30	0.847		

* Change = Change in severity of UDI – Did You Experience Nighttime Urination (Visit 3 to Visit 7 (or End-of-Treatment)).
** Difference = Difference between active treatment group and placebo.
*** P-Value: Significance between active treatment groups and placebo was tested on raw data analysis.

Table 42. Secondary Outcome Analysis - ITT Cohort:
UDI – Did You Experience Bed Wetting?
Change from Baseline (Visit 3) to End-of-Treatment (Visit 7)

Treatments	N	Baseline	Mean Change*	Standard Deviation	Difference**	P-Value***
Oxy 4 mg	132	0.17	-0.05	0.537	0.03	1.0000
Oxy 6 mg	119	0.18	-0.08	0.555	0	0.5169
Placebo	133	0.23	-0.08	0.488		

* Change = Change in severity of UDI – Did You Experience Bed Wetting? (Visit 3 to Visit 7 (or End-of-Treatment)).
** Difference = Difference between active treatment group and placebo.
*** P-Value: Significance between active treatment groups and placebo was tested on raw data analysis.

Table 43. Secondary Outcome Analysis - ITT Cohort:
UDI – Did You Experience Difficulty Emptying Your Bladder?
Change from Baseline (Visit 3) to End-of-Treatment (Visit 7)

Treatments	N	Baseline	Mean Change*	Standard Deviation	Difference**	P-Value***
Oxy 4 mg	131	0.29	-0.07	0.647	-0.03	0.5941
Oxy 6 mg	119	0.24	-0.03	0.559	-0.01	0.7669
Placebo	133	0.29	-0.04	0.558		

* Change = Change in severity of UDI – Did You Experience Difficulty Emptying Your Bladder? (Visit 3 to Visit 7 (or End-of-Treatment)).
** Difference = Difference between active treatment group and placebo.
*** P-Value: Significance between active treatment groups and placebo was tested on raw data analysis.

Table 44. Secondary Outcome Analysis - ITT Cohort:
UDI – Did You Experience Feeling of Incomplete Bladder Emptying?
Change from Baseline (Visit 3) to End-of-Treatment (Visit 7)

Treatments	N	Baseline	Mean Change*	Standard Deviation	Difference**	P-Value***
Oxy 4 mg	132	0.70	-0.27	0.839	-0.1	0.9700
Oxy 6 mg	119	0.66	-0.32	0.712	-0.15	0.2430
Placebo	133	0.55	-0.17	0.746		

* Change = Change in severity of UDI – Did You Experience Feeling of Incomplete Bladder Emptying? (Visit 3 to Visit 7 (or End-of-Treatment)).
** Difference = Difference between active treatment group and placebo.
*** P-Value: Significance between active treatment groups and placebo was tested on raw data analysis.

Table 45. Secondary Outcome Analysis - ITT Cohort: UDI – Did You Experience Lower Abdominal Pressure? Change from Baseline (Visit 3) to End-of-Treatment (Visit 7)

Treatments	N	Baseline	Mean Change*	Standard Deviation	Difference**	P-Value***
Oxy 4 mg	130	0.36	-0.19	0.648	0.13	0.6737
Oxy 6 mg	119	0.42	-0.23	0.718	0.09	0.6136
Placebo	133	0.50	-0.32	0.724		

* Change = Change in severity of UDI – Did You Experience Lower Abdominal Pressure? (Visit 3 to Visit 7 (or End-of-Treatment)).
** Difference = Difference between active treatment group and placebo.
*** P-Value: Significance between active treatment groups and placebo was tested on raw data analysis.

Table 46. Secondary Outcome Analysis - ITT Cohort: UDI – Did You Experience Pain When Urinating? Change from Baseline (Visit 3) to End-of-Treatment (Visit 7)

Treatments	N	Baseline	Mean Change*	Standard Deviation	Difference**	P-Value***
Oxy 4 mg	131	0.02	0.02	0.290	0.02	0.6638
Oxy 6 mg	119	0.07	-0.03	0.389	-0.03	0.8220
Placebo	132	0.03	0.00	0.175		

* Change = Change in severity of UDI – Did You Experience Pain When Urinating? (Visit 3 to Visit 7 (or End-of-Treatment)).
** Difference = Difference between active treatment group and placebo.
*** P-Value: Significance between active treatment groups and placebo was tested on raw data analysis.

Table 47. Secondary Outcome Analysis - ITT Cohort: UDI – Did You Experience Pain in the Lower Abdominal Area or Genital Area? Change from Baseline (Visit 3) to End-of-Treatment (Visit 7)

Treatments	N	Baseline	Mean Change*	Standard Deviation	Difference**	P-Value***
Oxy 4 mg	131	0.18	-0.09	0.561	-0.07	0.5503
Oxy 6 mg	119	0.09	0.04	0.458	0.06	0.3151
Placebo	133	0.11	-0.02	0.410		

* Change = Change in severity of UDI – Did You Experience Pain in the Lower Abdominal Area or Genital Area? (Visit 3 to Visit 7 (or End-of-Treatment)).
** Difference = Difference between active treatment group and placebo.
*** P-Value: Significance between active treatment groups and placebo was tested on raw data analysis.

Table 48. Secondary Outcome Analysis - ITT Cohort: UDI – Did You Experience Heaviness or Dullness in the Pelvic Area? Change from Baseline (Visit 3) to End-of-Treatment (Visit 7)

Treatments	N	Baseline	Mean Change*	Standard Deviation	Difference**	P-Value***
Oxy 4 mg	131	0.24	-0.12	0.595	-0.02	0.5703
Oxy 6 mg	119	0.24	-0.07	0.578	0.03	0.5657
Placebo	133	0.24	-0.10	0.564		

* Change = Change in severity of UDI – Did You Experience Heaviness or Dullness in the Pelvic Area? (Visit 3 to Visit 7 (or End-of-Treatment)).
** Difference = Difference between active treatment group and placebo.
*** P-Value: Significance between active treatment groups and placebo was tested on raw data analysis.

Table 49. Secondary Outcome Analysis - ITT Cohort: UDI – Did You Experience a Feeling of Bulging or Protrusion in the Vaginal Area? Change from Baseline (Visit 3) to End-of-Treatment (Visit 7)

Treatments	N	Baseline	Mean Change*	Standard Deviation	Difference**	P-Value***
Oxy 4 mg	131	0.13	-0.05	0.398	-0.07	0.0939
Oxy 6 mg	119	0.14	-0.03	0.410	-0.05	0.5616
Placebo	133	0.13	0.02	0.436		

* Change = Change in severity of UDI – Did You Experience a Feeling of Bulging or Protrusion in the Vaginal Area? (Visit 3 to Visit 7 (or End-of-Treatment)).
** Difference = Difference between active treatment group and placebo.
*** P-Value: Significance between active treatment groups and placebo was tested on raw data analysis.

Table 50. Secondary Outcome Analysis - ITT Cohort: UDI – Did You Experience Bulging or Protrusion You Can See in the Vaginal Area? Change from Baseline (Visit 3) to End-of-Treatment (Visit 7)

Treatments	N	Baseline	Mean Change*	Standard Deviation	Difference**	P-Value***
Oxy 4 mg	130	0.04	0.01	0.197	0.06	0.5211
Oxy 6 mg	119	0.06	-0.02	0.318	0.03	0.9471
Placebo	133	0.12	-0.05	0.324		

* Change = Change in severity of UDI – Did You Experience Bulging or Protrusion You Can See in the Vaginal Area? (Visit 3 to Visit 7 (or End-of-Treatment)).
** Difference = Difference between active treatment group and placebo.
*** P-Value: Significance between active treatment groups and placebo was tested on raw data analysis.

Table 51. Secondary Outcome Analysis - ITT Cohort: UDI – Did You Experience Pelvic Discomfort when Standing or Physically Exerting Yourself? Change from Baseline (Visit 3) to End-of-Treatment (Visit 7)

Treatments	N	Baseline	Mean Change*	Standard Deviation	Difference**	P-Value***
Oxy 4 mg	130	0.24	-0.15	0.611	-0.1	0.9167
Oxy 6 mg	119	0.10	-0.01	0.460	0.04	0.6233
Placebo	133	0.13	-0.05	0.377		

* Change = Change in severity of UDI – Did You Experience Pelvic Discomfort when Standing or Physically Exerting Yourself? (Visit 3 to Visit 7 (or End-of-Treatment)).
** Difference = Difference between active treatment group and placebo.
*** P-Value: Significance between active treatment groups and placebo was tested on raw data analysis.

Table 52. Secondary Outcome Analysis - ITT Cohort: UDI – Did You Have to Push on the Vaginal Walls to Have a Bowel Movement? Change from Baseline (Visit 3) to End-of-Treatment (Visit 7)

Treatments	N	Baseline	Mean Change*	Standard Deviation	Difference**	P-Value***
Oxy 4 mg	130	0.30	-0.05	0.657	0.03	0.7222
Oxy 6 mg	118	0.31	-0.07	0.448	0.01	0.4654
Placebo	133	0.44	-0.08	0.504		

* Change = Change in severity of UDI – Did You Have to Push on the Vaginal Walls to Have a Bowel Movement? (Visit 3 to Visit 7 (or End-of-Treatment)).
** Difference = Difference between active treatment group and placebo.
*** P-Value: Significance between active treatment groups and placebo was tested on raw data analysis.

[00152] An Incontinence Impact Questionnaire (IIQ) was a list of 30 questions that referred to areas in the patient's life, which may have been influenced or changed by their incontinence problem. The questionnaire measured how severe women found accidental urine loss and/or prolapse had affected their activities, relationships, and feelings. The scale to access how severe the activity/relationship/feeling was affected ranged from 0 to 3, 0 for "not at all", 1 for "slightly", 2 for "moderately", and 3 for "greatly." In addition, 9 for "not applicable" indicated the environment for recording that scale no longer applied, therefore was treated as missing severity. Analysis results of the change from baseline (Visit 3) to end-of-treatment (Visit 7) for all 30 questions for the ITT cohort are presented below.

[00153] For the ITT cohort, statistically significant differences between the treatment group and placebo were found in the assessment of 12 different questions for the mean change from baseline to end-of-study. Both 4 mg/day and 6 mg/day oxybutynin vaginal

rings showed a significant reduction in the severity compared to placebo for the affect of incontinence on (1) the patient's ability to travel by car or bus for distances greater than 20 minutes away from home, and (2) sleep. 6 mg/day Oxybutynin vaginal rings were able to achieve or approach statistical significance, compared to placebo, for further reducing the severity of the effect of incontinence on patient's shopping activities, entertainment activities such as going to a movie or concert, ability to travel by car or bus for distances < 20 minutes away from home, going places if you are not sure about available restrooms, going on vacation, church or temple attendance, participating in social activities outside your home, frustration, depression, and embarrassment. Tables 53-82 show the analysis of each question in the IIQ for the ITT cohort.

Table 53. Secondary Outcome Analysis - ITT Cohort:
IIQ– Ability to do Household Chores?
Change from Baseline (Visit 3) to End-of-Treatment (Visit 7)

Treatments	N	P-Value***
Oxy 4 mg	130	0.7651
Oxy 6 mg	119	0.2236
***P-Value: Significance between active treatment groups and placebo was tested on raw data analysis.		

Table 54. Secondary Outcome Analysis - ITT Cohort:
IIQ– Ability to do Usual Maintenance or Repair Work Done in Home or Yard
Change from Baseline (Visit 3) to End-of-Treatment (Visit 7)

Treatments	N	P-Value***
Oxy 4 mg	125	0.4769
Oxy 6 mg	112	0.3907
***P-Value: Significance between active treatment groups and placebo was tested on raw data analysis.		

Table 55. Secondary Outcome Analysis - ITT Cohort:
IIQ– Shopping Activities
Change from Baseline (Visit 3) to End-of-Treatment (Visit 7)

Treatments	N	P-Value***
Oxy 4 mg	131	0.4450
Oxy 6 mg	119	0.0305
***P-Value: Significance between active treatment groups and placebo was tested on raw data analysis.		

Table 56. Secondary Outcome Analysis - ITT Cohort:
IIQ– Hobbies and Pastime Activities
Change from Baseline (Visit 3) to End-of-Treatment (Visit 7)

Treatments	N	P-Value***
Oxy 4 mg	129	0.3783
Oxy 6 mg	118	0.1616
***P-Value: Significance between active treatment groups and placebo was tested on raw data analysis.		

Table 57. Secondary Outcome Analysis - ITT Cohort:
IIQ– Physical Recreation Activities such as Walking, Swimming, or Other Exercise
Change from Baseline (Visit 3) to End-of-Treatment (Visit 7)

Treatments	N	P-Value***
Oxy 4 mg	128	0.6786
Oxy 6 mg	114	0.1235
P-Value: Significance between active treatment groups and placebo was tested on raw data analysis.		

Table 58. Secondary Outcome Analysis - ITT Cohort:
IIQ– Entertainment Activities such as Going to a Movie or Concert?
Change from Baseline (Visit 3) to End-of-Treatment (Visit 7)

Treatments	N	P-Value***
Oxy 4 mg	128	0.3367
Oxy 6 mg	116	0.0326
***P-Value: Significance between active treatment groups and placebo was tested on raw data analysis.		

Table 59. Secondary Outcome Analysis - ITT Cohort:
IIQ– Ability to Travel by Car or Bus for Distances <20 Minutes Away from Home
Change from Baseline (Visit 3) to End-of-Treatment (Visit 7)

Treatments	N	P-Value***
Oxy 4 mg	130	0.3661
Oxy 6 mg	119	0.0176
***P-Value: Significance between active treatment groups and placebo was tested on raw data analysis.		

Table 60. Secondary Outcome Analysis - ITT Cohort:
IIQ– Ability to Travel by Car or Bus for Distances >20 Minutes Away from Home
Change from Baseline (Visit 3) to End-of-Treatment (Visit 7)

Treatments	N	P-Value***
Oxy 4 mg	129	0.0159
Oxy 6 mg	115	0.0087
***P-Value: Significance between active treatment groups and placebo was tested on raw data analysis.		

Table 61. Secondary Outcome Analysis - ITT Cohort:
IIQ– Going Places if You Are Not Sure About Available Restroom?
Change from Baseline (Visit 3) to End-of-Treatment (Visit 7)

Treatments	N	P-Value***
Oxy 4 mg	129	0.1966
Oxy 6 mg	118	0.0009
***P-Value: Significance between active treatment groups and placebo was tested on raw data analysis.		

Table 62. Secondary Outcome Analysis - ITT Cohort:
IIQ– Going on Vacation
Change from Baseline (Visit 3) to End-of-Treatment (Visit 7)

Treatments	N	P-Value***
Oxy 4 mg	129	0.3876
Oxy 6 mg	115	0.0007
***P-Value: Significance between active treatment groups and placebo was tested on raw data analysis.		

Table 63. Secondary Outcome Analysis - ITT Cohort:
IIQ– Church or Temple Attendance
Change from Baseline (Visit 3) to End-of-Treatment (Visit 7)

Treatments	N	P-Value***
Oxy 4 mg	119	0.1848
Oxy 6 mg	104	0.0522
***P-Value: Significance between active treatment groups and placebo was tested on raw data analysis.		

Table 64. Secondary Outcome Analysis - ITT Cohort:
IIQ– Volunteer Activities
Change from Baseline (Visit 3) to End-of-Treatment (Visit 7)

Treatments	N	P-Value***
Oxy 4 mg	117	0.8591
Oxy 6 mg	104	0.1745
***P-Value: Significance between active treatment groups and placebo was tested on raw data analysis.		

Table 65. Secondary Outcome Analysis - ITT Cohort:
IIQ– Employment (Work) Outside the Home
Change from Baseline (Visit 3) to End-of-Treatment (Visit 7)

Treatments	N	P-Value***
Oxy 4 mg	111	0.9359
Oxy 6 mg	103	0.1618
***P-Value: Significance between active treatment groups and placebo was tested on raw data analysis.		

Table 66. Secondary Outcome Analysis - ITT Cohort:
IIQ– Having Friends Visit You in Your Home
Change from Baseline (Visit 3) to End-of-Treatment (Visit 7)

Treatments	N	P-Value***
Oxy 4 mg	128	0.8684
Oxy 6 mg	116	0.2938
***P-Value: Significance between active treatment groups and placebo was tested on raw data analysis.		

Table 67. Secondary Outcome Analysis - ITT Cohort:
IIQ– Participating in Social Activities Outside Your Home
Change from Baseline (Visit 3) to End-of-Treatment (Visit 7)

Treatments	N	P-Value***
Oxy 4 mg	129	0.1091
Oxy 6 mg	119	0.0476
***P-Value: Significance between active treatment groups and placebo was tested on raw data analysis.		

Table 68. Secondary Outcome Analysis - ITT Cohort:
IIQ– Relationship with Friends
Change from Baseline (Visit 3) to End-of-Treatment (Visit 7)

Treatments	N	P-Value***
Oxy 4 mg	129	0.9647
Oxy 6 mg	118	0.1953
***P-Value: Significance between active treatment groups and placebo was tested on raw data analysis.		

Table 69. Secondary Outcome Analysis - ITT Cohort:
IIQ– Relationship with Family Excluding Husband/Companion
Change from Baseline (Visit 3) to End-of-Treatment (Visit 7)

Treatments	N	P-Value***
Oxy 4 mg	126	0.5875
Oxy 6 mg	118	0.0820
***P-Value: Significance between active treatment groups and placebo was tested on raw data analysis.		

Table 70. Secondary Outcome Analysis - ITT Cohort:
IIQ– Ability to Have Sexual Relations
Change from Baseline (Visit 3) to End-of-Treatment (Visit 7)

Treatments	N	P-Value***
Oxy 4 mg	100	0.7603
Oxy 6 mg	100	0.4086
***P-Value: Significance between active treatment groups and placebo was tested on raw data analysis.		

Table 71. Secondary Outcome Analysis - ITT Cohort:
IIQ– Way You Dress
Change from Baseline (Visit 3) to End-of-Treatment (Visit 7)

Treatments	N	P-Value***
Oxy 4 mg	130	0.1192
Oxy 6 mg	118	0.0610
***P-Value: Significance between active treatment groups and placebo was tested on raw data analysis.		

Table 72. Secondary Outcome Analysis - ITT Cohort:
IIQ– Emotional Health
Change from Baseline (Visit 3) to End-of-Treatment (Visit 7)

Treatments	N	P-Value***
Oxy 4 mg	129	0.6604
Oxy 6 mg	119	0.1065
***P-Value: Significance between active treatment groups and placebo was tested on raw data analysis.		

Table 73. Secondary Outcome Analysis - ITT Cohort:
IIQ– Physical Health
Change from Baseline (Visit 3) to End-of-Treatment (Visit 7)

Treatments	N	P-Value***
Oxy 4 mg	128	0.5352
Oxy 6 mg	118	0.1530
***P-Value: Significance between active treatment groups and placebo was tested on raw data analysis.		

Table 74. Secondary Outcome Analysis - ITT Cohort:
IIQ– Sleep
Change from Baseline (Visit 3) to End-of-Treatment (Visit 7)

Treatments	N	P-Value***
Oxy 4 mg	130	0.0177
Oxy 6 mg	119	0.0164
***P-Value: Significance between active treatment groups and placebo was tested on raw data analysis.		

Table 75. Secondary Outcome Analysis - ITT Cohort:
IIQ– Does Fear of Odor Restrict Your Activities?
Change from Baseline (Visit 3) to End-of-Treatment (Visit 7)

Treatments	N	P-Value***
Oxy 4 mg	128	0.3858
Oxy 6 mg	119	0.0873
***P-Value: Significance between active treatment groups and placebo was tested on raw data analysis.		

Table 76. Secondary Outcome Analysis - ITT Cohort:
IIQ– Does Fear of Embarrassment Restrict Your Activities?
Change from Baseline (Visit 3) to End-of-Treatment (Visit 7)

Treatments	N	P-Value***
Oxy 4 mg	130	0.2826
Oxy 6 mg	118	0.4150
***P-Value: Significance between active treatment groups and placebo was tested on raw data analysis.		

Table 77. Secondary Outcome Analysis - ITT Cohort:
IIQ– Nervousness or Anxiety
Change from Baseline (Visit 3) to End-of-Treatment (Visit 7)

Treatments	N	P-Value***
Oxy 4 mg	129	0.7747
Oxy 6 mg	117	0.5468
***P-Value: Significance between active treatment groups and placebo was tested on raw data analysis.		

Table 78. Secondary Outcome Analysis - ITT Cohort:
IIQ– Fear
Change from Baseline (Visit 3) to End-of-Treatment (Visit 7)

Treatments	N	P-Value***
Oxy 4 mg	126	0.8370
Oxy 6 mg	118	0.2871
***P-Value: Significance between active treatment groups and placebo was tested on raw data analysis.		

Table 79. Secondary Outcome Analysis - ITT Cohort:
IIQ– Frustration
Change from Baseline (Visit 3) to End-of-Treatment (Visit 7)

Treatments	N	P-Value***
Oxy 4 mg	130	0.2598
Oxy 6 mg	119	0.0047
***P-Value: Significance between active treatment groups and placebo was tested on raw data analysis.		

Table 80. Secondary Outcome Analysis - ITT Cohort:
IIQ - Anger
Change from Baseline (Visit 3) to End-of-Treatment (Visit 7)

Treatments	N	P-Value***
Oxy 4 mg	128	0.1752
Oxy 6 mg	118	0.6365
***P-Value: Significance between active treatment groups and placebo was tested on raw data analysis.		

Table 81. Secondary Outcome Analysis - ITT Cohort:
IIQ– Depression
Change from Baseline (Visit 3) to End-of-Treatment (Visit 7)

Treatments	N	P-Value***
Oxy 4 mg	128	0.7450
Oxy 6 mg	118	0.0095
***P-Value: Significance between active treatment groups and placebo was tested on raw data analysis.		

Table 82. Secondary Outcome Analysis - ITT Cohort:
IIQ– Embarrassment
Change from Baseline (Visit 3) to End-of-Treatment (Visit 7)

Treatments	N	P-Value***
Oxy 4 mg	129	0.2835
Oxy 6 mg	119	0.0337
***P-Value: Significance between active treatment groups and placebo was tested on raw data analysis.		

[00154] In this double-blind study consisting of a two-week placebo run-in followed by 12 weeks of active treatment or placebo, both the 4 mg/day and the 6 mg/day oxybutynin vaginal rings demonstrated greater reductions compared to placebo from baseline to the end-of-treatment in the weekly total number of reported incontinence episodes and in the number of urge-only incontinence episodes. For the ITT cohort, the 4 mg/day vaginal ring demonstrated a reduction relative to placebo of 2.22 total episodes (p=0.0613) and 2.80 urge-only episodes (p=0.558). The 6 mg/day vaginal ring exhibited a reduction of 2.02 total episodes (p=0.1850) and 2.57 urge-only episodes (p=0.1803) compared to placebo. For the MITT cohort, these reductions were, for the 4 mg/day oxybutynin vaginal ring, 2.99 total episodes (p=0.0364) and 3.29 urge-only episodes (p=0.544) and, for 6 mg/day vaginal ring, 2.93 total episodes (p=0.0176) and 3.30 urge-only episodes (p=0.0223). The proportions of patients in the 4 mg/day and 6 mg/day oxybutynin

vaginal ring groups who reported no incontinence episodes at the end of the treatment was also significantly greater for both the ITT and MITT cohorts.

[00155] Urinary frequency was reduced by 0.60 voids per 24 hours for 4 mg/day (p=0.0722) and 0.93 voids per 24 hours for 6 mg/day (p=0.0004) compared to placebo for the ITT cohort. For the MITT cohort, these reductions were 0.70 voids per 24 hours for 4 mg/day (p=0.1039) and 1.0 void per 24 hours for 6 mg/day (p=0.0020). No statistically significant differences between the 4 mg/day and 6 mg/day vaginal rings and placebo were observed with respect to change in average void volume per 24 hours. As a result of a decrease in urinary frequency and no change in average void volume per 24 hours, both active treatment vaginal rings had an average void volume increase of 5.32 mL for the ITT cohort (p=0.0126) and 4.94 mL for the MITT cohort (p=0.0444) compared to placebo.

[00156] Mean VAS was reduced by 0.52 for the 4 mg/day (p=0.0199) and 1.23 (p=0.0012) for the 6 mg/day vaginal rings compared to placebo for the ITT cohort. For the MITT cohort, these reductions were 0.44 (p=0.0374) for the 4 mg/day vaginal rings and 1.12 (p=0.0045) for the 6 mg/day vaginal rings.

[00157] Results showed that the 4 mg/day vaginal rings provided a level of active treatment effect that exceeded the effect of placebo alone and that the 6 mg/day vaginal rings provided similar results compared to placebo, in addition, was associated with greater reduction in urinary frequency compared to placebo than the 4 mg/day vaginal ring. When considering the MITT cohort consisting of patients who met all three criteria for incontinence at baseline (as opposed to the ITT cohort that included all three patients with analyzable data for the total incontinence episode endpoint), the magnitude of the effect for the oxybutynin vaginal ring groups, especially for the 4 mg/day vaginal rings, was even more evident.

[00158] The incidence of treatment-emergent adverse events reported with a frequency of 2% or greater, by body system, is provided in Table 75.

Table 75. Treatment-Emergent Adverse Events With an Incidence of 2% or Greater in Any Treatment Group During Double-Blind Period - Treated Safety Cohort

MedDRA System Organ Class and Preferred Term	Placebo (N=155)		Oxy 4 Mg (N=143)		Oxy 6 Mg (N=147)		Total (N=143)	
	N	%	N	%	N	%	N	%
INFECTIONS AND INFESTATIONS								
URINARY TRACT INFECTION	7	4.52	13	9.09	18	12.24	38	8.54
SINUSITIS	2	1.29	3	2.10	2	1.36	7	1.57
UPPER RESPIRATORY TRACT INFECTION	1	0.65	3	2.10	1	0.68	5	1.12
VULVOVAGINAL MYCOTIC INFECTION	4	2.58	3	2.10	6	4.08	13	2.92
GASTROINTESTINAL DISORDERS								
DRY MOUTH	4	2.58	7	4.90	15	10.20	26	5.84
NAUSEA	1	0.65	4	2.80	2	1.36	7	1.57
ABDOMINAL PAIN	3	1.94	3	2.10	3	2.04	9	2.02
CONSTIPATION	2	1.29	2	1.40	4	2.72	8	1.80
DIARRHOEA	6	3.87	2	1.40	5	3.40	13	2.92
REPRODUCTIVE SYSTEM AND BREAST DISORDERS								
VAGINAL DISCHARGE	6	3.87	5	3.50	7	4.76	18	4.04
VAGINAL PAIN	0	0.00	3	2.10	0	0.00	3	0.67
VAGINAL HAEMORRHAGE	4	2.58	2	1.40	6	4.08	12	2.70
VAGINAL ERYTHEMA	2	1.29	0	0.00	3	2.04	5	1.12
MUSCULOSKELETAL AND CONNECTIVE TISSUE DISORDERS								
BACK PAIN	4	2.58	3	2.10	1	0.68	8	1.80
NERVOUS SYSTEM DISORDERS								
HEADACHE	2	1.29	3	2.10	6	4.08	11	2.47
RENAL AND URINARY DISORDERS								
DYSURIA	0	0.00	3	2.10	2	1.36	5	1.12
INVESTIGATIONS								
HEPATIC ENZYME INCREASED	2	1.29	0	0.00	3	2.04	5	1.12

[00159] The incidence of treatment-emergent adverse events was comparable across treatment groups with the exception of urinary tract infection, dry mouth, and headache. The most commonly reported adverse events were urinary tract infection (12.24% on 6 mg/day oxybutynin vaginal ring, 9.09% on 4 mg/day oxybutynin vaginal ring, and 4.52% on placebo) and dry mouth (10.20% on 6 mg/day oxybutynin vaginal ring, 4.90% on 4 mg/day oxybutynin vaginal ring, and 2.58% on placebo); both adverse events were

associated with incidence rates that increased with dose. The incidence rates of dry mouth compare favorably to the 29-61% rate reported for an oral, extended release formulation of oxybutynin (Ditropan XL®) and are similar to the rates of 4.9-9.6% seen in a twice weekly transdermal oxybutynin product.

[00160] All of the various embodiments or options described herein is combined in any and all variations. While the invention has been particularly shown and described with reference to some embodiments thereof, it will be understood by those skilled in the art that they have been presented by way of example only, and not limitation, and various changes in form and details is made therein without departing from the spirit and scope of the invention. Thus, the breadth and scope of the present invention should not be limited by any of the above described exemplary embodiments, but should be defined only in accordance with the following claims and their equivalents.

[00161] All documents cited herein, including journal articles or abstracts, published or corresponding U.S. or foreign patent applications, issued or foreign patents, or any other documents, are each entirely incorporated by reference herein, including all data, tables, figures, and text presented in the cited documents.

WE CLAIM:

1. A method of treating a condition associated with overactive bladder, comprising administering to a female an intravaginal device comprising:
   (a) an annular first matrix comprising a pocket and a pocket wall, wherein the pocket wall has a uniform thickness, and wherein the pocket wall encompasses the pocket; and
   (b) a second matrix comprising an anticholinergic agent, wherein the second matrix is located in the pocket.

2. The method of claim 1, wherein the first matrix further comprises a slit, wherein the slit extends a length of the pocket.

3. The method of any one of claims 1 and 2, wherein the condition associated with overactive bladder is selected from the group consisting of urinary incontinence episodes, urinary urgency, urinary frequency, involuntary bladder contractions, and relaxation of the bladder smooth muscle.

4. The method of any one of claims 1 to 3, wherein the intravaginal device is administered to the subject for 1 hour to 6 months.

5. The method of any one of claims 1 to 3, wherein the intravaginal device is administered to the subject for 1 day to 1 month.

6. The method of any one of claims 1 to 3, wherein the intravaginal device is administered to the subject for 2 days to 2 weeks.

7. The method of any one of claims 1 to 6, wherein the anticholinergic agent is selected from the group consisting of oxybutynin, tolterodine, trospium, solifenacin, darifenacin, dicyclomine, propantheline, propiverine, bethanechol, methylbenactyzium, scopolamine, and pharmaceutically acceptable salts, esters, hydrates, prodrugs, or derivatives thereof.

8. The method of any one of claims 1 to 7, wherein the anticholinergic agent is oxybutynin.

9. The method of any one of claims 1 to 8, wherein the anticholinergic agent is released from the intravaginal device at a rate of 0.1 mg/day to 50 mg/day.

10. The method of any one of claims 1 to 9, wherein the anticholinergic agent is released from the intravaginal device at a rate of 1 mg/day to 20 mg/day.

11. The method of any one of claims 1 to 10, wherein the anticholinergic agent is released from the intravaginal device at a rate of 4 mg/day to 6 mg/day.

12. The method of any one of claims 1 to 11, wherein after the intravaginal device is administered to the subject, the average maximum (C_{max}) plasma level of the anticholinergic agent in the subject is 1 ng/mL to 15 ng/mL.

13. The method of any one of claims 1 to 12, wherein after the intravaginal device is administered to the subject, the average maximum (C_{max}) plasma level of the anticholinergic agent in the subject is 4 ng/mL to 12 ng/mL.

14. The method of any one of claims 1 to 13, wherein after the intravaginal device is administered to the subject, the average time to achieve maximum blood plasma concentration (T_{max}) of the anticholinergic agent in the subject is 60 hours to 100 hours.

15. The method of any one of claims 1 to 14, wherein the area under the plasma concentration of the anticholinergic agent versus time of administration curve (AUC) is 30 (h x ng/mL) to 800 (h x ng/mL).

16. The method of any one of claims 1 to 15, wherein the area under the plasma concentration of the anticholinergic agent versus time of administration curve (AUC) is 50 (h x ng/mL) to 100 (h x ng/mL).

17. The method of any one of claims 1 to 15, wherein the area under the plasma concentration of the anticholinergic agent versus time of administration curve (AUC) is 100 (h x ng/mL) to 300 (h x ng/mL).

18. The method of any one of claims 1 to 18, wherein after the intravaginal device is administered to the subject, the average maximum (C_{max}) plasma level of a metabolite of the anticholinergic agent in the subject is 1 ng/mL to 15 ng/mL.

19. The method of any one of claims 1 to 18, wherein after the intravaginal device is administered to the subject, the average maximum (C_{max}) plasma level of a metabolite of the anticholinergic agent in the subject is 4 ng/mL to 12 ng/mL.

20. The method of any one of claims 1-19, wherein after the intravaginal device is administered to the subject, the average time to achieve maximum blood plasma concentration (T_{max}) of a metabolite of the anticholinergic agent in the subject is 60 hours to 100 hours.

21. The method of any one of claims 1 to 20, wherein the area under the plasma concentration of a metabolite of the anticholinergic agent versus time of administration curve (AUC) is 30 (h x ng/mL) to 800 (h x ng/mL).

22. The method of any one of claims 1 to 21, wherein the area under the plasma concentration of a metabolite of the anticholinergic agent versus time of administration curve (AUC) is 50 (h x ng/mL) to 250 (h x ng/mL).

23. The method of any one of claims 1 to 22, wherein the area under the plasma concentration of a metabolite of the anticholinergic agent versus time of administration curve (AUC) is 100 (h x ng/mL) to 200 (h x ng/mL).

24. The method of any one of claims 1 to 23, wherein the ratio of a metabolite of the anticholinergic agent AUC to the anticholinergic agent AUC is 0.5 to 2.5.

25. The method of any one of claims 18 to 24, wherein the metabolite of the anticholinergic agent is N-desethyloxybutynin.