July 13, 1926. 1,592,463

T. MARKER

GOLF CLUB

Filed March 3, 1926

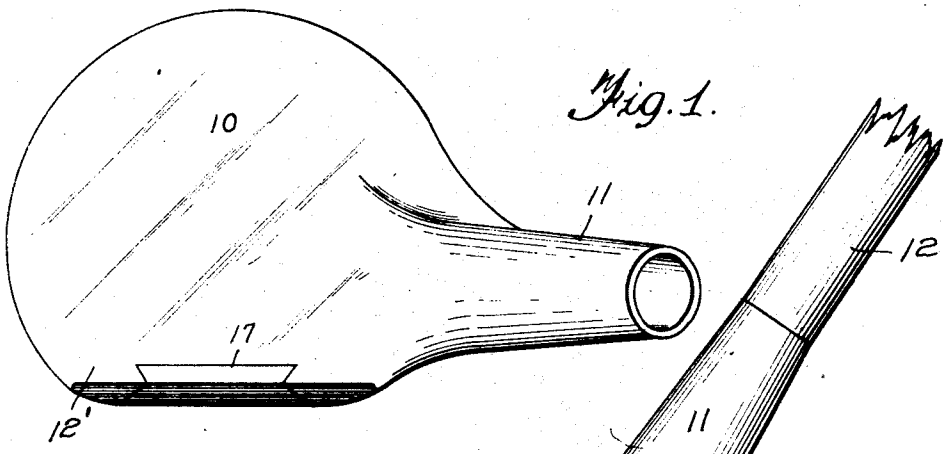

Fig. 1.

Fig. 2.

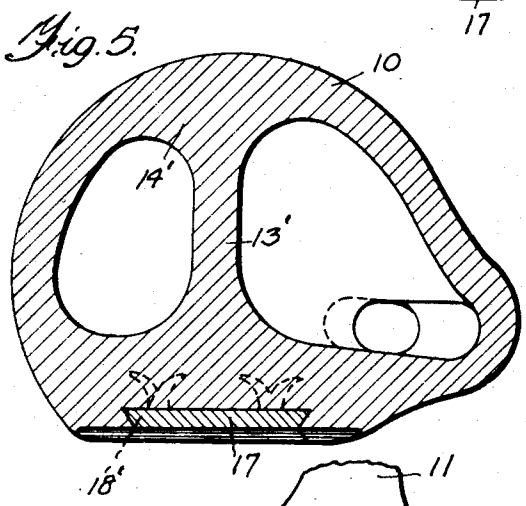

Fig. 5.

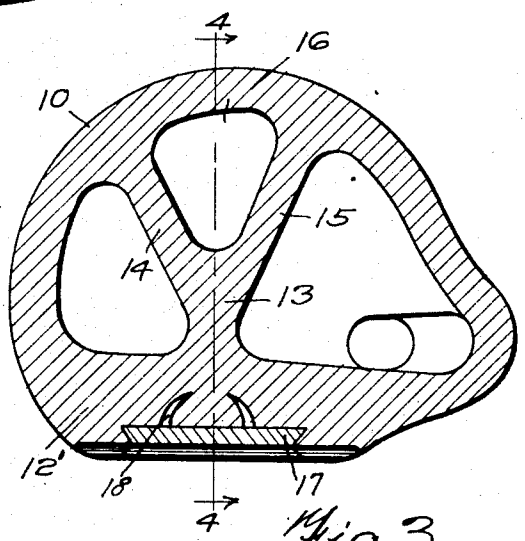

Fig. 3.

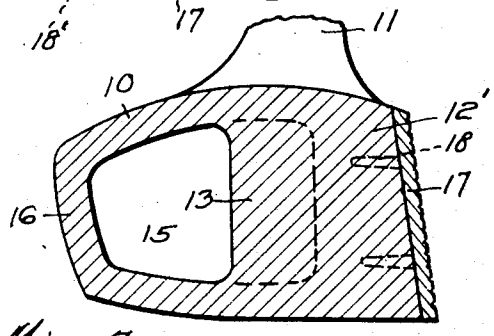

Fig. 4.

Inventor

THEODORE MARKER,

By Jerry A. Mathews

Attorney

Patented July 13, 1926. 1,592,463

UNITED STATES PATENT OFFICE.

THEODORE MARKER, OF MILWAUKEE, WISCONSIN.

GOLF CLUB.

Application filed March 3, 1926. Serial No. 92,053.

My invention relates to metallic heads of golf clubs or like devices.

There is approximately from 5,000 to 7,000 pounds of pressure exerted upon the head of a golf club, such as a driver, at the moment of contact between the ball and the head. As a result of this, it has been found that the striking face of a hollow metallic head of a golf club, frequently becomes concave instead of remaining straight or convex. The insert plate or sole, not being properly supported, partakes of this concave arrangement, and hence the club cannot be used properly.

In accordance with my invention I provide a metallic head, having reinforcing ribs or bridges, rigidly connecting the forward or striking face with the rear wall of the head, and these reinforcing rib or ribs are so distributed and arranged that the striking face is rigidly held against bending, and remains true in shape, after use. Further, I provide an insert or shoe upon the striking face, which is attached to the head by casting the metallic head about the insert or shoe, and no separate screws or spikes or attaching means are necessary to securely bind these parts together. The construction is such that the club head is practically indestructible and is properly shaped and balanced.

In the accompanying drawings, forming a part of this specification, and in which like numerals are employed to designate like parts throughout the same,

Figure 1 is a plan view of a club head embodying my invention,

Figure 2 is a side elevation of the same,

Figure 3 is a horizontal section taken on line 3—3 of Figure 2,

Figure 4 is a transverse section taken on line 4—4 of Figure 3, and,

Figure 5 is a horizontal section through a club head embodying a modification of the invention.

In the drawings, wherein for the purpose of illustration, is shown a preferred embodiment of my invention, the numeral 10 designates a golf club or head, such as a driver. This head is cast of metal preferably magnesium or Dow metal although other metals or alloys may be employed. The head is molded into the desired shape and has an integral neck 11, for receiving the staff 12, secured therein by any suitable means. As more clearly shown in Figures 3 and 4, the numeral 12′ designates the striking face of the head, which is suitably thickened for strength and rigidity. Preferably cast integral with the face 12′ is a transverse web or bridge 13, which is also integral with the top and bottom of the head. Formed integral with the web 13 are rearwardly diverging webs 14 and 15, which are formed integral with the rear wall of the head, and its top and bottom. These webs form a generally Y-shaped reinforcing bridge, and rigidly connect the striking face 12′ with the rear wall 16 and also with the top and bottom of the head. With this arrangement, it is impossible for the striking face 12′ to bend, in use, so that the same cannot become concave.

The numeral 17 designates an insert or shoe, which may be formed of steel, bronze, or any other suitable metal. This insert is provided with attaching elements or lugs 18, integral therewith, which are preferably curved.

In the production of the head, the insert or shoe is suitably held within a die or mold, and the head is cast within this die, about the insert. The insert, therefore, becomes integral with the head, and, of course, is securely anchored thereto. The insert and striking face may be grooved or serrated as is customary.

In Figure 5, I have shown a slight modification of the invention. In this figure the Y-shaped bridge is omitted and a single straight web or bridge 13′ is substituted therefor, which, of course, rigidly connects the striking face with the rear wall and with the top and bottom of the head. Ample metal is provided at the ends of this web, as shown at 14′, to suitably reinforce the same. The insert or shoe 17 has the head cast about the same, as described in connection with the first form of the invention. This insert 17 has lugs 18′ which serve the same purpose as the lugs 18 except that the lugs 18′ are forked.

It is preferable that the reinforcing web or webs be cast integral with the head, but I contemplate forming these webs separate, and rigidly mounting them within the head, for the purpose stated.

It is to be understood that the form of my invention, herewith shown and described, is to be taken as a preferred example of the same, and that various changes in the shape, size and arrangement of parts

may be resorted to without departing from the spirit of my invention or the scope of the subjoined claims.

Having thus described my invention, I claim:—

1. An integral cast metallic head for golf clubs or the like, having a forward striking wall and a rear wall, and rearwardly diverging webs rigidly attached to the striking wall and to the rear wall.

2. An integral cast metallic head for golf clubs or the like, having a forward striking wall and a rear wall, and a generally Y-shaped bridge arranged between said walls and rigidly connected therewith, the arms of the bridge diverging toward the rear wall.

3. A striking insert having attaching means, and a metallic head cast about the insert and having the attaching means imbedded therein, said head having a forward striking wall and a rear wall, and a rigid reinforcing web connecting said walls so that the insert is supported against bending due to the force at the moment of contact between the ball and head.

In testimony whereof I affix my signature.

THEODORE MARKER.