Office de la Propriété Intellectuelle du Canada
Un organisme d'Industrie Canada

Canadian Intellectual Property Office
An agency of Industry Canada

CA 2471064 A1 2004/12/18

(21) 2 471 064

(12) DEMANDE DE BREVET CANADIEN
CANADIAN PATENT APPLICATION

(13) A1

(22) Date de dépôt/Filing Date: 2004/06/15

(41) Mise à la disp. pub./Open to Public Insp.: 2004/12/18

(30) Priorité/Priority: 2003/06/18 (MI2003A-001231) IT

(51) Cl.Int.[7]/Int.Cl.[7] B65D 17/32, B65D 51/24

(71) Demandeur/Applicant:
R.S.T.B. GROUP S.R.L., IT

(72) Inventeurs/Inventors:
ROSSETTI, LUCA, IT;
MOLINARI, MAURIZIO, IT

(74) Agent: FINLAYSON & SINGLEHURST

(54) Titre : DISPOSITIF DE FERMETURE POUR CANNETTES
(54) Title: CLOSURE ASSEMBLY FOR BEVERAGE CANS

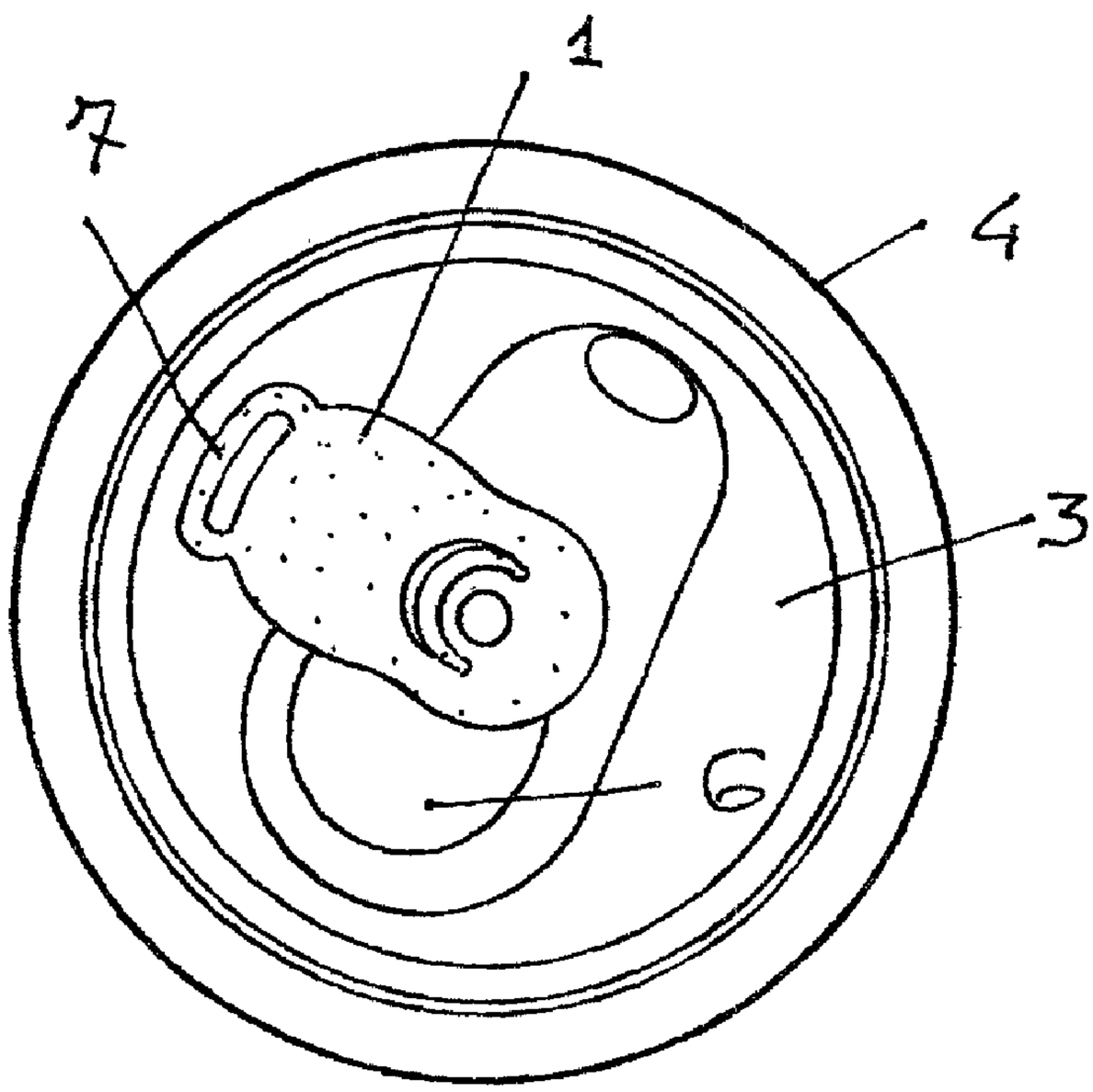

(57) Abrégé/Abstract:
A closure assembly, specifically designed for beverage cans, comprises a tang pivoted to a pivot pin rigid with a wall of the can at an opening portion, which can be removed for freeing an opening therefrom it is possible to pour the can contents, or directly drink the beverage, and being characterized in that the tang, pivoted to a pin rigid with the can wall, comprises an enlarged thickness portion, designed for reclosing the opening of the can.

CLOSURE ASSEMBLY FOR BEVERAGE CANS

ABSTRACT

A closure assembly, specifically designed for beverage cans, comprises a tang pivoted to a pivot pin rigid with a wall of the can at an opening portion, which can be removed for freeing an opening therefrom it is possible to pour the can contents, or directly drink the beverage, and being characterized in that the tang, pivoted to a pin rigid with the can wall, comprises an enlarged thickness portion, designed for reclosing the opening of the can.

CLOSURE ASSEMBLY FOR BEVERAGE CANS

BACKGROUND OF THE INVENTION

The present invention relates to a closure assembly specifically designed for beverage or drink holding cans.

As is known, beverage can closures assemblies are conventionally constituted by a tang pivoted to the top surface of the can, which tang is used as a lever to push inward a weakened portion of the can surface to free an opening, of substantially ovoidal configuration, therefrom it is possible to pour the can contents, or directly drink it.

Also known is the fact that, upon opening, a prior can cannot be tightly reclosed.

Accordingly, the can beverage, in particular if it is of a sparkling or effervescent type, must be consumed within a comparatively short time and, moreover, cannot be preserved for a long time, upon opening the can.

A lot of different reclosing systems for reclosing beverage cans have been already proposed: however, the mentioned systems conventionally comprise separated fittings or articles, which have a comparatively large size and, moreover, a very high cost.

In contrast with other types of packages, such as plastic bottles including threaded caps and laminated material boxes for fruit juices, milk and the like, conventional beverage cans are not provided with reclosable plugs which, however, would be very

useful.

SUMMARY OF THE INVENTION

Accordingly, the aim of the present invention is to provide such a closure assembly, specifically designed for beverage cans, which allows to tightly reclose an opened can.

Within the scope of the above mentioned aim, a main object of the present invention is to provide such a closure assembly, allowing to hold the beverage held in a can in a sparkling or effervescent condition, even after the opening of the can.

Another object of the present invention is to provide such a closure assembly which is very competitive from a mere economic standpoint, and simple from the constructional standpoint, thereby allowing the can provided with said closure assembly, to be constructed on a very large scale.

Yet another object of the present invention is to provide such a closure assembly which can be made by using materials and methods broadly used in this field.

According to one aspect of the present invention, the above mentioned aim and objects, as well as yet other objects, which will become more apparent hereinafter, are achieved by a closure assembly, specifically designed for beverage cans, said closure assembly comprising a tang pivoted to a pivoting pin rigid with a wall of the can at an opening portion thereof.

Said tang can be removed to free an

opening, therethrough it would be possible to pour the can contents, or directly drink the beverage held therein, and being characterized in that said tang comprises an increased thickness portion, adapted to reclose the opening.

BRIEF DESCRIPTION OF THE DRAWINGS

Further characteristics and advantages of the present invention will become more apparent hereinafter from the following detailed disclosure of a preferred, though not exclusive, embodiment thereof, which is illustrated, by way of an indicative, but not limitative, example, in the accompanying drawings, where:

Figure 1 is a top plan view of a beverage can, with the closure tang thereof shown in a closed and sealed condition;

Figure 2 is a view similar to figure 1, but showing the beverage can in an open condition thereof;

Figure 3 is a view similar to figure 2, but illustrating closure tang performing a rotary movement;

Figure 4 is a further view similar to the preceding views, but illustrating the beverage can with the tang thereof in a closed condition, according to the present invention; and

Figure 5 is a partial elevation view of the beverage can shown with its tang in a closed condition.

DESCRIPTION OF THE PREFERRED EMBODIMENTS

With reference to the number references to the above mentioned figures, the closure assembly according to the present invention, comprises a tang 1 pivoted to a pivot pin 2 on a top portion 3 of a beverage can 4, of a per se known type, at the conventionally provided weakened portion 5 thereof.

The latter, as it is inward pressed, will defined an ovoidal opening or port 6, therefrom it would be possible to pour the can contents, or directly drink it.

According to the present invention, the tang 1 comprises an increased thickness portion 11, formed on the bottom surface of said tang and provided for closing the opening 6, by rotating the tang through 180°, with respect to its starting position used for lever-urging the portion 5, for opening it.

Advantageously, the tang 1 is preferably made of the same material as presently used for the can, and has a sufficient stiffness to be used for opening the weakened portion 5, while having a degree of elasticity, to allow the increased thickness portion 11 to resiliently engage the edges of the opening 6.

To that end, the increased thickness portion 11 has advantageously a mushroom configuration, so as to be stably engaged or introduced into said opening.

A raised edge 7 will facilitate the reopening operation of reopening the can, allowing to

rotate the tang 1 to free again the opening 6.

It has been found that the invention fully achieves the intended aim and objects.

In fact, the invention provides a closure assembly allowing to reclose a beverage can, to protect its contents, upon opening the can.

Such an advantage would be very important, for example for sprinkling beverages, which, owing to the inventive closure assembly, will not loose their sparkling characteristics, even if they are consumed in an extended time period.

In particular, the possibility of tightly closing the cans, will allow to make said cans in a so-called "family" size.

Such a size has not been up to now used in the beverage can making field.

In practicing the invention, the used materials, as well as the contingent size and shapes, could be any, depending on requirements and status of the art.

WHAT IS CLAIMED IS:

1. A closure assembly, for beverage cans, characterized in that said closure assembly comprises a closure tang pivoted to a pivot pin rigid with a wall of a can, at an opening portion thereof and which can be removed for freeing an opening therefrom it would be possible to pour the beverage of said can or directly drink it, characterized in that said tang comprises an increased thickness portion, and adapted to re-close said opening.

2. A closure assembly, according to claim 1, characterized in that said increased thickness portion is formed on a bottom surface of said tang.

3. A closure assembly, according to claims 1 and 2 characterized in that said tang is made of a plastic material.

4. A closure assembly, according to one or more of the preceding claims, characterized in that said increased thickness portion has a mushroom configuration.

5. A closure assembly, according to one or more of the preceding claims, characterized in that said tang comprises a gripping and driving projecting edge.

6. A closure assembly, for beverage cans, characterized in that said increased thickness portion 11, is formed on a bottom surface of said tang, said tang being adapted to re-close the opening of said can, and to rotate through an angle of 180° with respect to a starting position thereof used for lever-pressing on a weakened portion 5, as said can is opened.

7. A closure assembly, according to one or more of the preceding claims, characterized in that said tang 1 has a sufficient stiffness to be used for opening said weakened portion 5, while having resilient properties to allow said increased thickness portion 11 to resiliently engage the edges of said opening 6.

8. A closure assembly, according to one or more of the preceding claims, characterized in that said increased thickness portion 11 has a mushroom configuration, so as to be firmly engaged in said opening 6.

9. A closure assembly, according to one or more of the preceding claims, characterized in that said closure assembly comprises a raised-projecting edge 7, for facilitating the reopening of said can,

while allowing said tang 1, to turn in order to free again said opening 6.

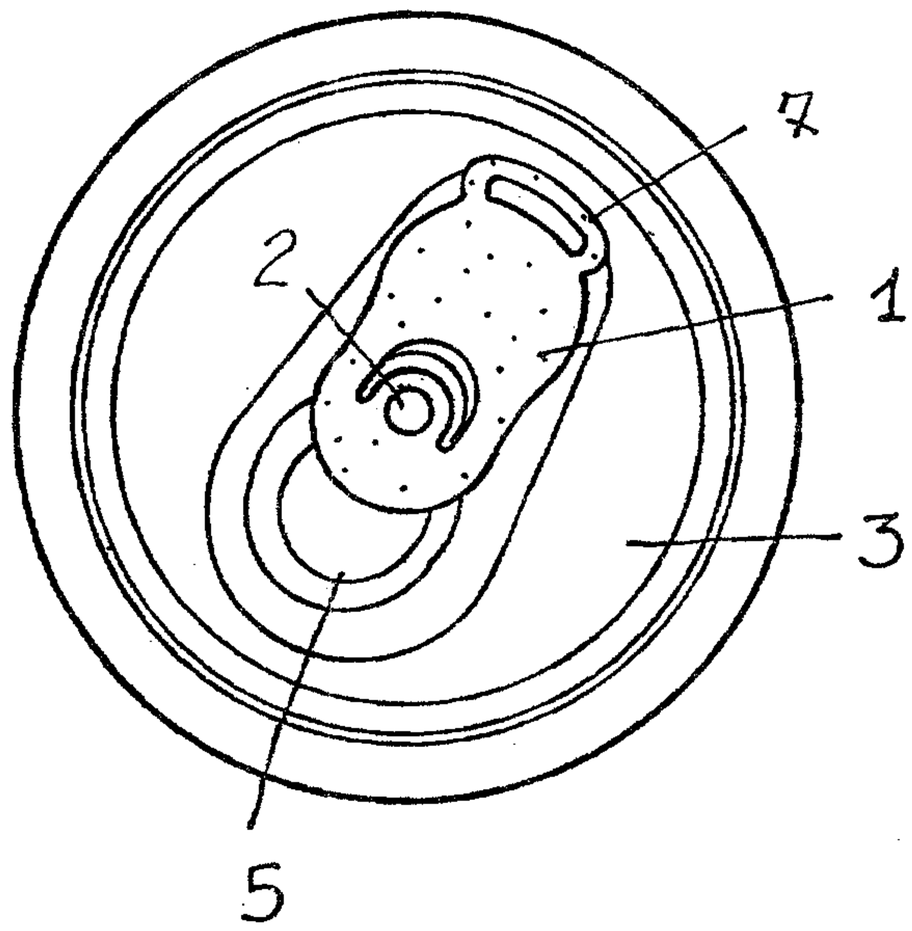

FIG. 1

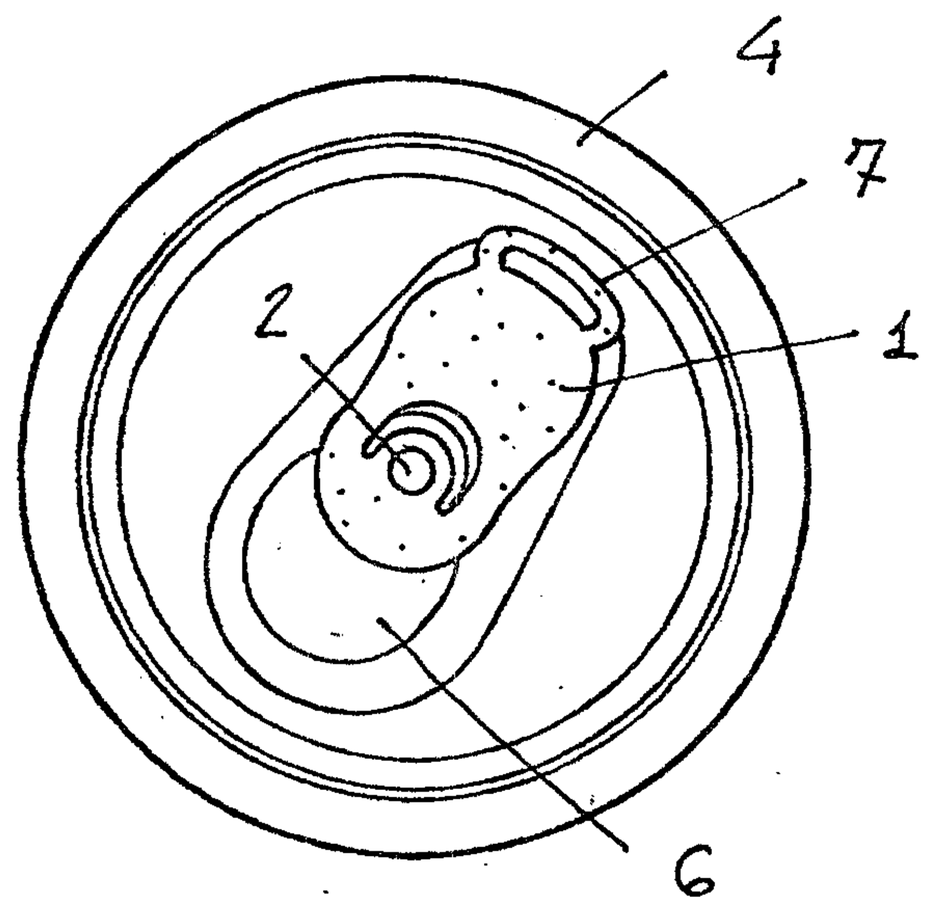

FIG. 2

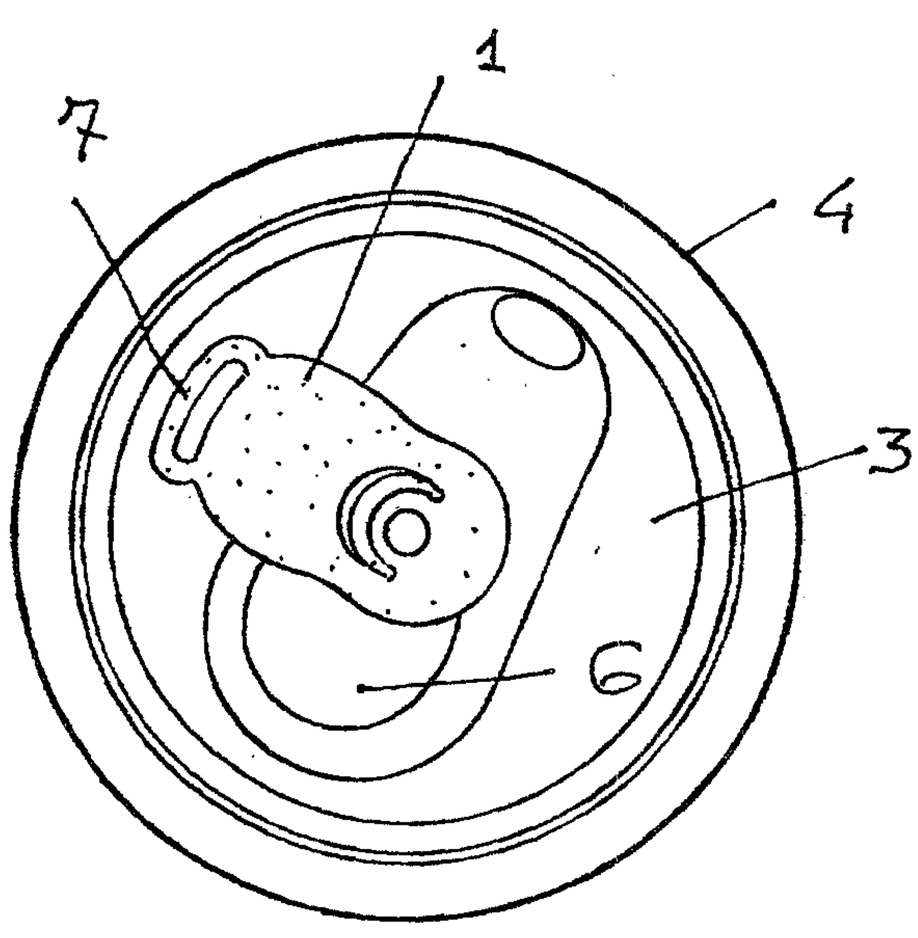

FIG. 3

Gowling Lafleur Henderson
PATENT AGENTS

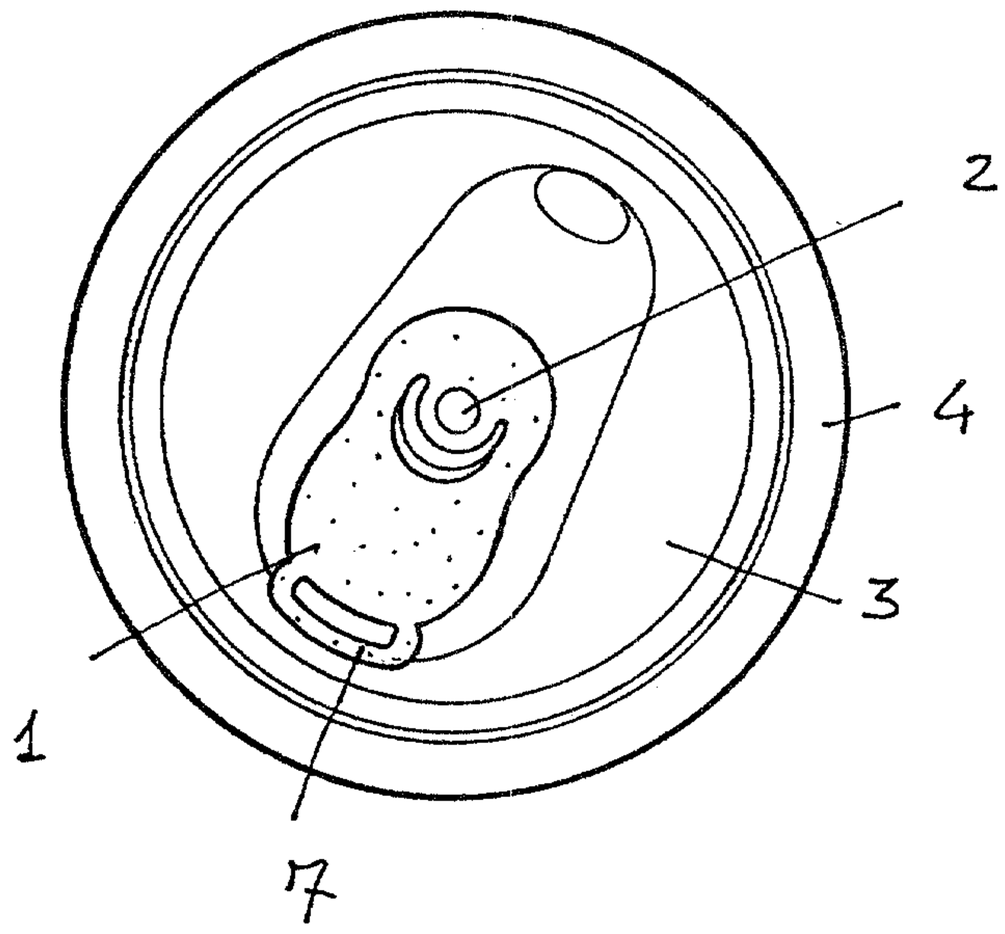

FIG. 4

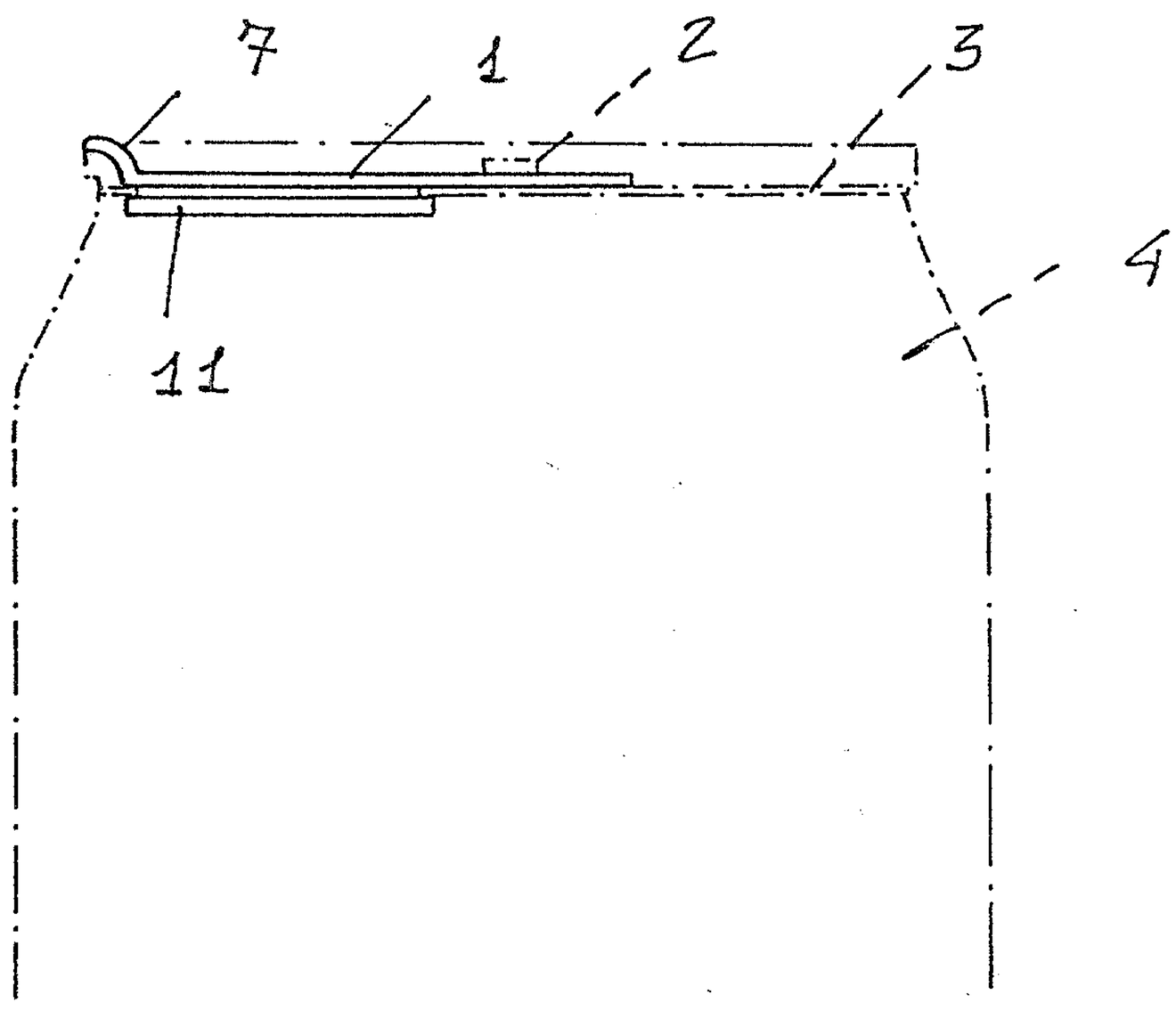

FIG. 5

Ladas & Parry
PATENT AGENTS

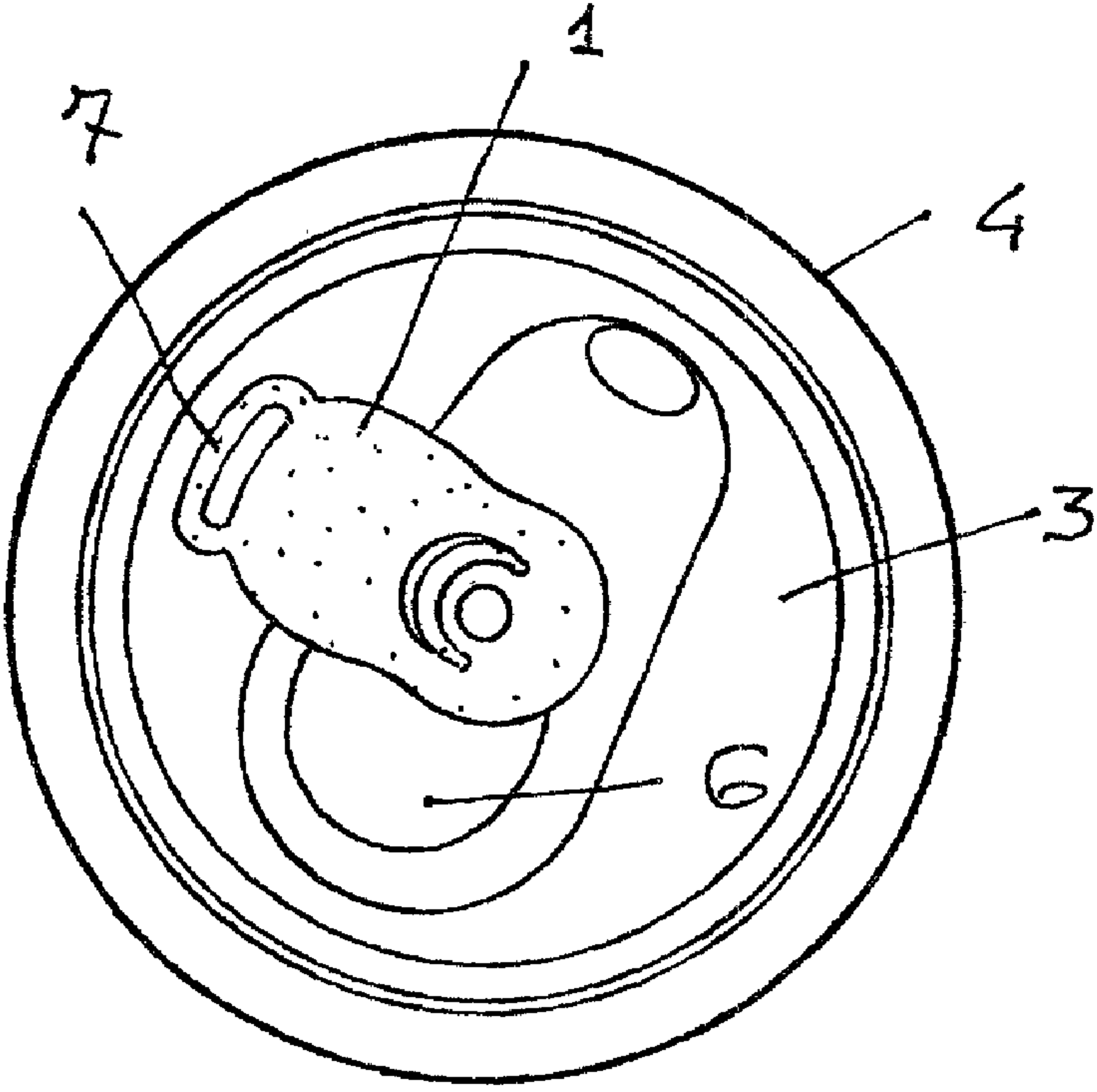
1
7
4
3
6