US00D853445S

(12) United States Design Patent

Kuratani et al.

(10) Patent No.: US D853,445 S
(45) Date of Patent: ** Jul. 9, 2019

(54) **MOTOR**

(71) Applicant: **NIDEC SANKYO CORPORATION**, Suwa-gun, Nagano (JP)

(72) Inventors: **Hiroki Kuratani**, Nagano (JP); **Takashi Yamamoto**, Nagano (JP); **Nobuki Kokubo**, Nagano (JP); **Masaki Harada**, Nagano (JP)

(73) Assignee: **NIDEC SANKYO CORPORATION**, Nagano (JP)

(**) Term: **15 Years**

(21) Appl. No.: **29/613,819**

(22) Filed: **Aug. 14, 2017**

(30) **Foreign Application Priority Data**

Feb. 14, 2017 (JP) 2017-002753

(51) **LOC (11) Cl.** **15-01**

(52) **U.S. Cl.**
USPC **D15/1**; D13/112

(58) **Field of Classification Search**
USPC D13/112, 113, 114, 122, 184, 199; D15/1–5
CPC H02K 5/06; H02K 5/225; H02K 11/33; H02K 9/14; H02K 7/1025; H02K 7/20918; H02K 5/00; H02K 5/02; H02K 5/04; H02K 5/08
See application file for complete search history.

(56) **References Cited**

U.S. PATENT DOCUMENTS

5,883,449	A *	3/1999	Mehta	F04D 25/082 310/417
D709,450	S *	7/2014	Tanabe	D13/112
D741,260	S *	10/2015	Yabuuchi	D13/112
D806,650	S *	1/2018	Chang	D13/112
10,020,701	B2 *	7/2018	Kamiyoshihara	H02K 1/2773
2015/0249376	A1 *	9/2015	Hiwaki	H02K 5/04 310/43
2015/0311760	A1 *	10/2015	Iwasaki	H02K 3/28 310/71

* cited by examiner

Primary Examiner — T Chase Nelson
Assistant Examiner — Ania Aman
(74) *Attorney, Agent, or Firm* — Cantor Colburn LLP

(57) **CLAIM**

The ornamental design for a motor, as shown and described.

DESCRIPTION

FIG. **1** is a front view of a motor.
FIG. **2** is a back-side view thereof;
FIG. **3** is a left-side view thereof;
FIG. **4** is a right-side view thereof;
FIG. **5** is a top plan view thereof;
FIG. **6** is a bottom plan view thereof;
FIG. **7** is a front, left, top perspective view thereof;
FIG. **8** is a back, right, top perspective view thereof;
FIG. **9** is a front, right, bottom perspective view thereof; and,
FIG. **10** is a back, left, bottom perspective view thereof.

1 Claim, 8 Drawing Sheets

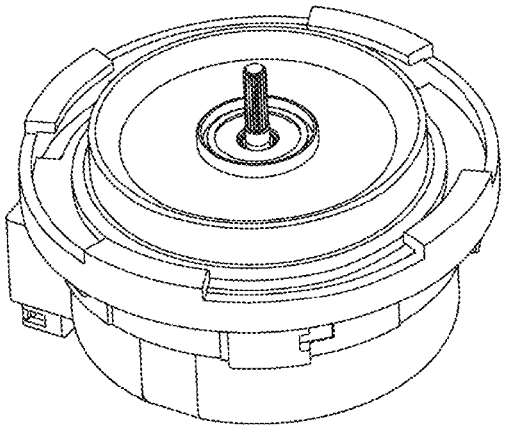

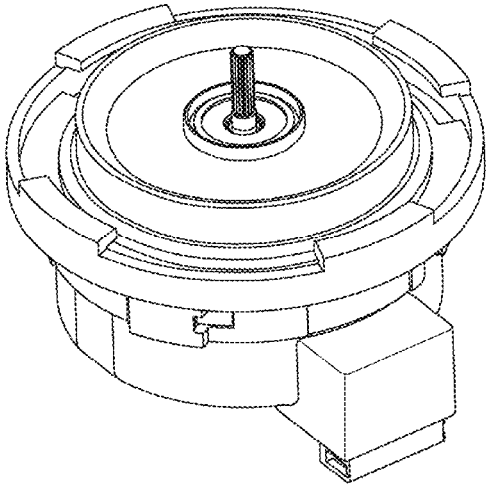

FIG.1

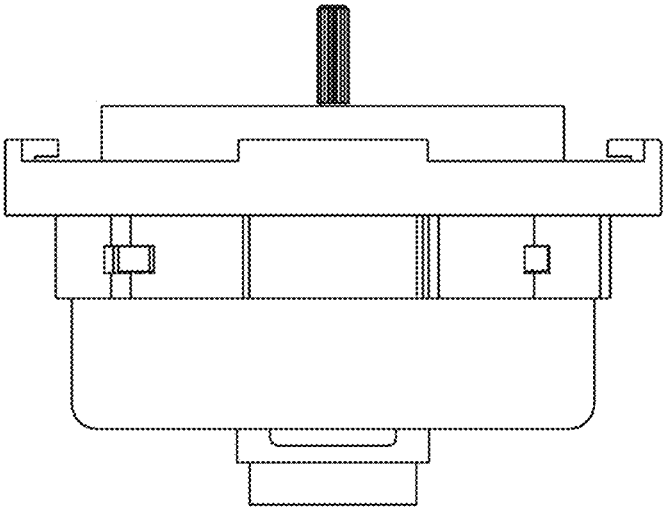

FIG. 2

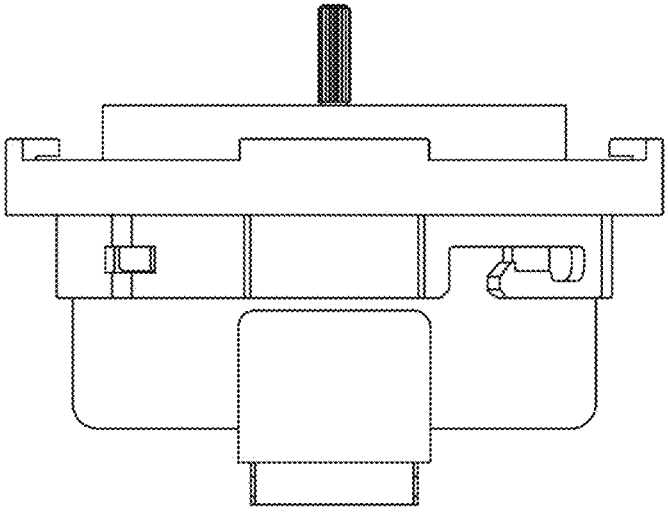

FIG. 3

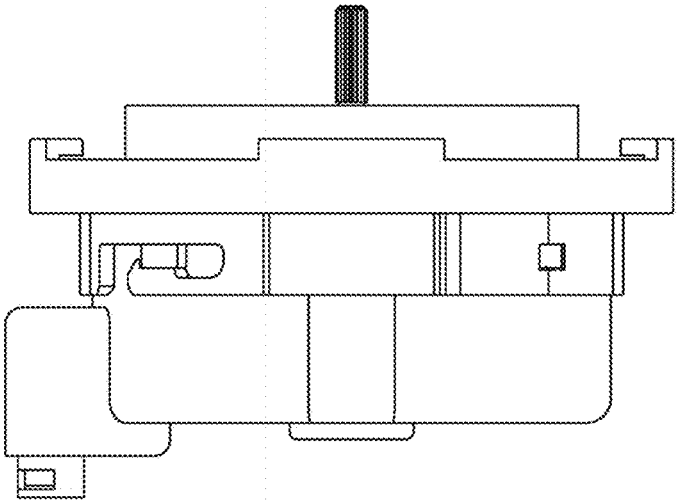

FIG. 4

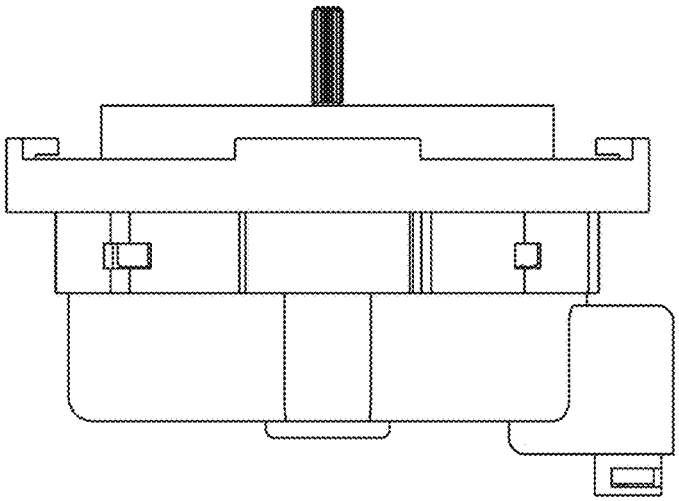

FIG. 5

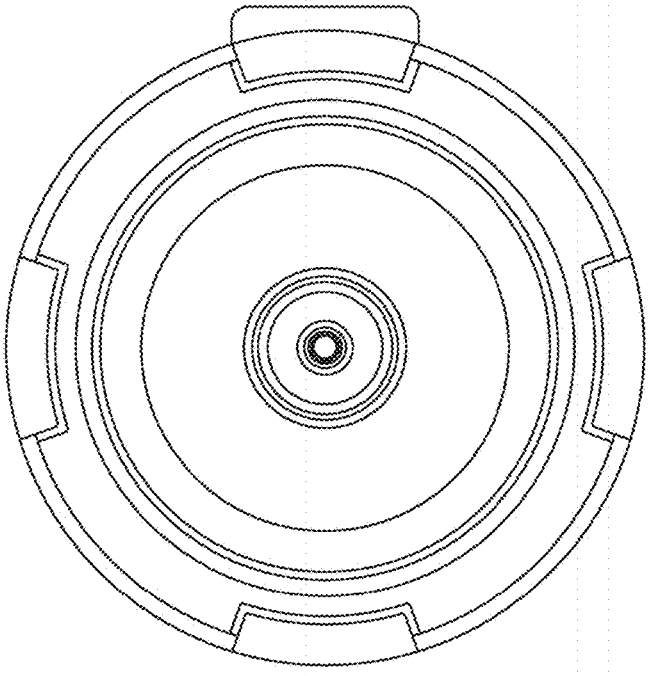

FIG. 6

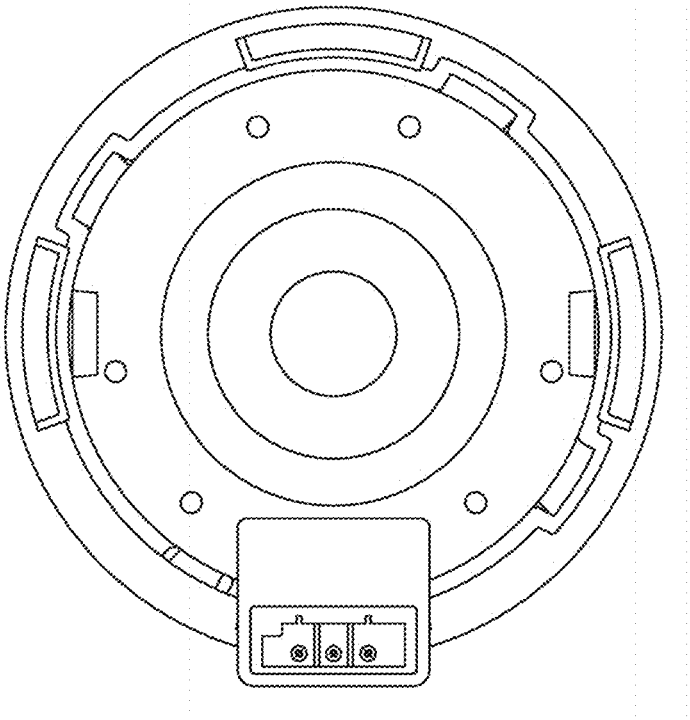

FIG. 7

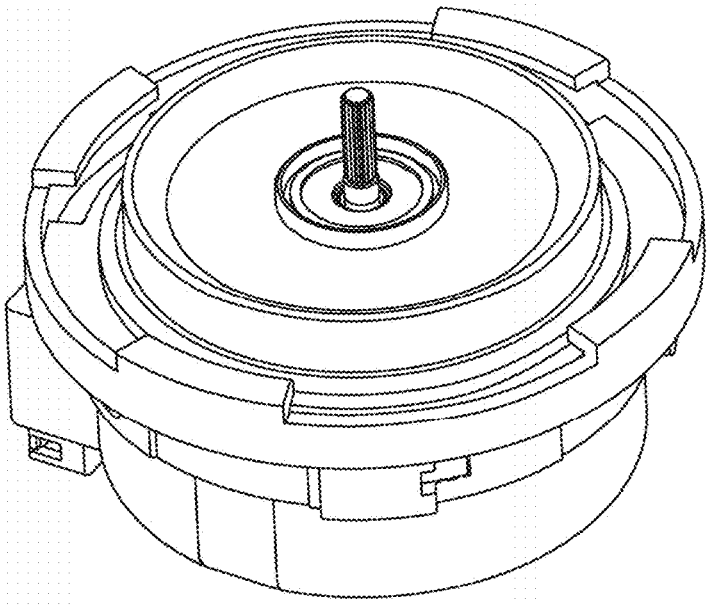

FIG. 8

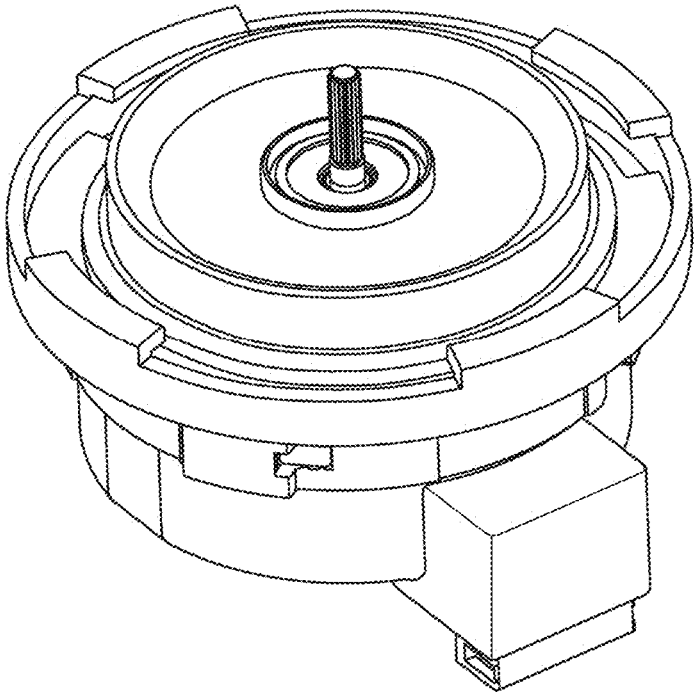

FIG. 9

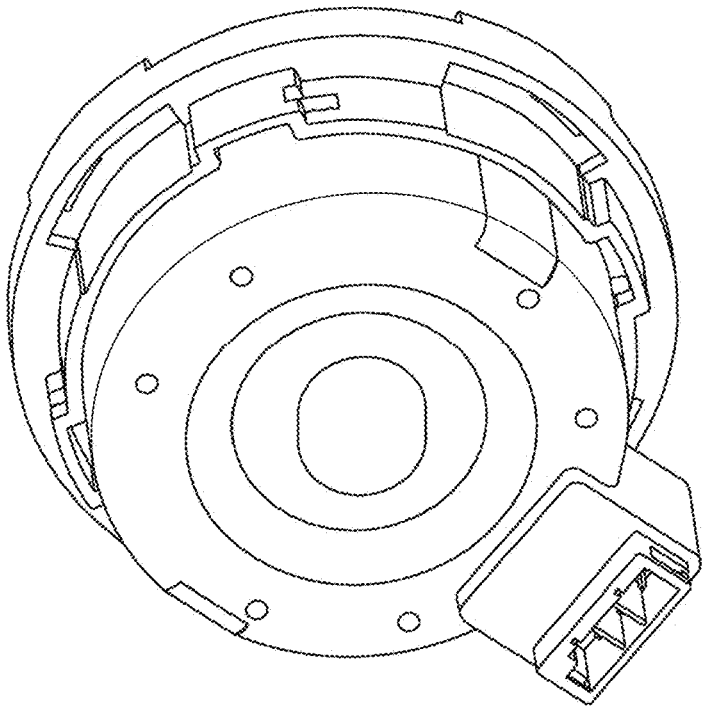

FIG. 10

