Feb. 20, 1962 F. D. LOW 3,021,863

DISPENSING MECHANISM

Filed Aug. 26, 1960 2 Sheets-Sheet 1

FIG. 1

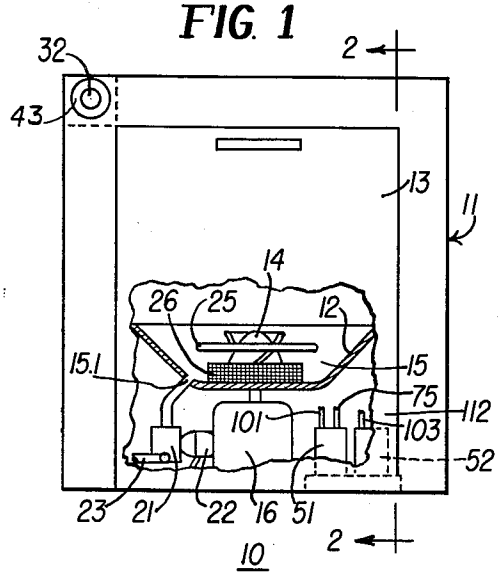

FIG. 2

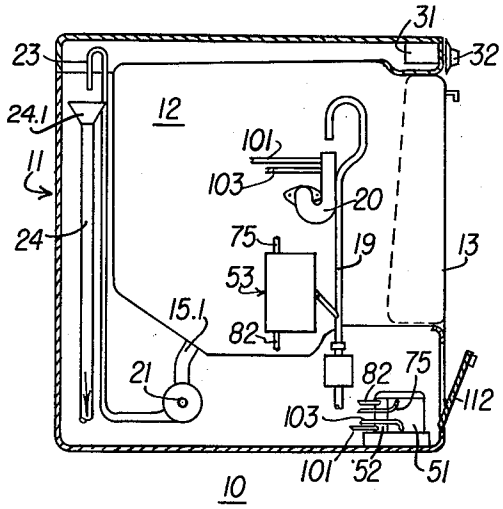

FIG. 3

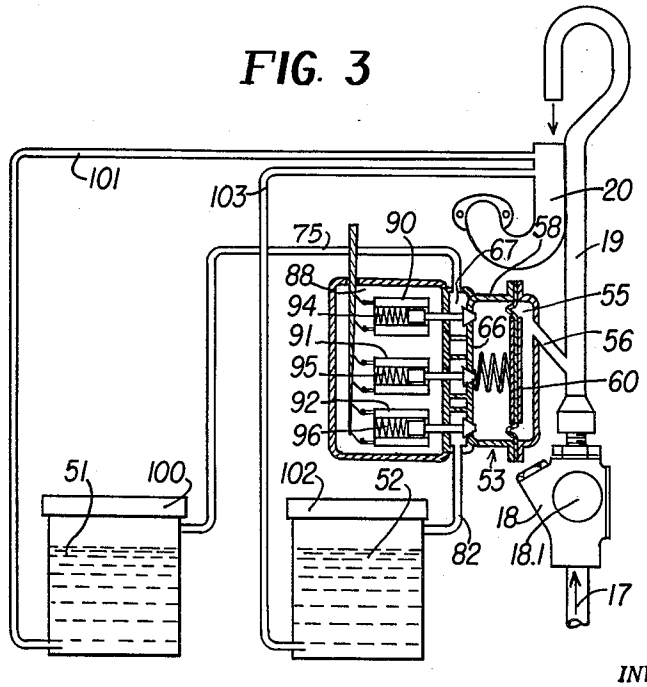

INVENTOR.
Frank D. Low
BY
Andrew S. Hubbard
Atty

Feb. 20, 1962 F. D. LOW 3,021,863

DISPENSING MECHANISM

Filed Aug. 26, 1960 2 Sheets-Sheet 2

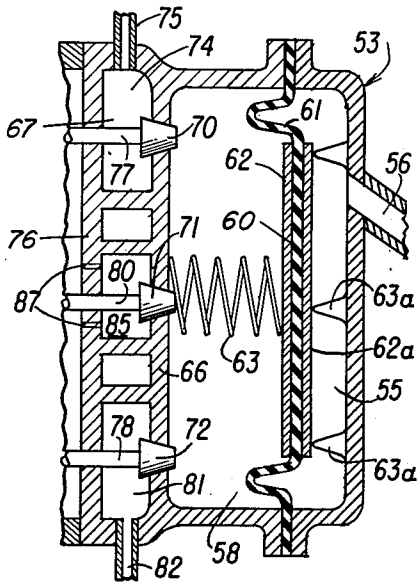

FIG. 6

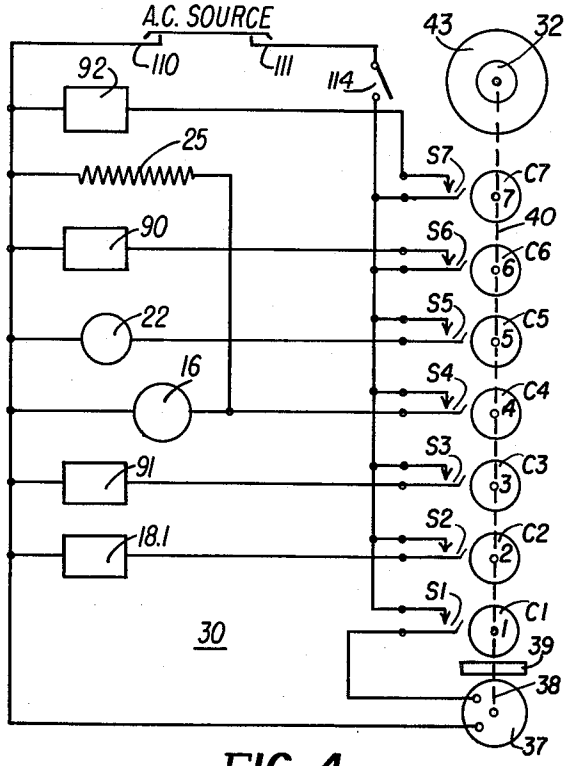

FIG. 4

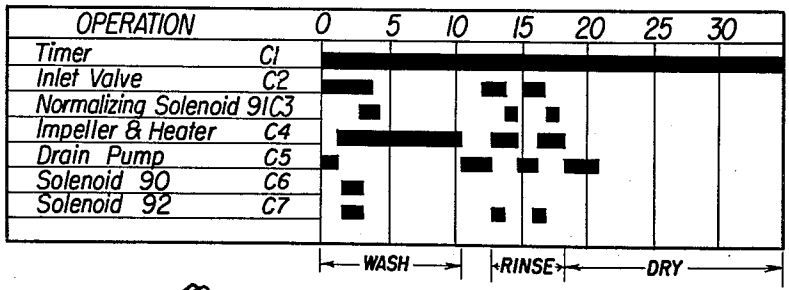

FIG. 5

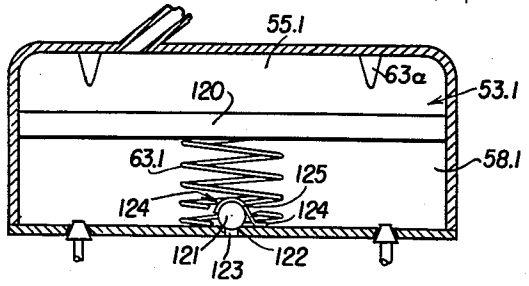

FIG. 7

INVENTOR.
Frank D. Low
BY
Andrew S. Hubbard
Atty

United States Patent Office 3,021,863 Patented Feb. 20, 1962

3,021,863

DISPENSING MECHANISM

Frank D. Low, La Grange Park, Ill., assignor to General Electric Company, a corporation of New York

Filed Aug. 26, 1960, Ser. No. 52,175
5 Claims. (Cl. 137—209)

The invention relates to automatically programmed washing machines and more particularly to the dispensing of additives into such machines.

The invention is herein described as applied to dishwashing machines however it is easy to see that the principles used are equally applicable to clothes washing machines where may of the problems and their modes of solution are similar.

In washing machines of either type, articles to be cleaned are subjected to treatment by intimate contact with cleaning liquids such as water fortified with detergents, bleaches, rinse agents, wetting agents and the like. In these usages, the additives to be used must be dispensed at the proper periods in the cycle, mixed with water prior to its contact with the articles and then the resulting solution is allowed to contact the articles being washed. Recently the trend in washing processes has been to use liquid additives which more readily go into solution when injected into the water.

It is therefore the principal object of the present invention to provide an improved means of dispensing liquid additives into a washing machine.

It is a further object of the invention to utilize a multi-solenoid selective diaphragm control for dispensing into the water inlet conduit of a washing machine, a fluid additive suitable to a particular operational condition of the machine.

In carrying out these objects I provide closed containers for each of the liquids to be dispensed. Each container has two tubes communicating with interior of the container. The first of these tubes from a container is connected to a common solenoid controlled chamber of a pressure generator and the second is connected into the machine water inlet conduit. The pressure generator includes two chambers separated by a flexible imperforate diaphragm. The first chamber is open to the water inlet line serving the washing machine, to subject the diaphragm to changes in pressure in the water inlet line. The second chamber has a number of normally closed, solenoid controlled, valves, each of these valves communicating with one of the tubes connected to the additive containers. Another solenoid controlled valve allows the second chamber to be vented to the atmosphere. A spring or its equivalent in the second chamber nominally biases the diaphragm into movement toward the first chamber. When it is intended to dispense additive from one particular container into the water discharging into the washing machine, the solenoid valve controlling the tube communicating with that one container is activated. Activation of the solenoid places the one container in communication with the second chamber of the pressure generator. Thus when water flows through the inlet line to the machine, water pressure is built up in the first chamber. This pressure displaces the diaphragm to reduce the volume of the second chamber, thus increasing the pressure therein. The pressure thus generated is transmitted through the open tube to the upper portion of the container—that is, above the additive liquid contained therein—and forces a charge of the additive out the discharge tube of the container and into the downstream section of the water inlet conduit for dispersion into the inlet water. At the conclusion of the metering period, the solenoid is closed, shutting off the flow of additive. The venting solenoid valve is then opened to expose the second chamber to atmospheric pressure, whereupon

when the water flow to the washing machine is interrupted and the pressure is relieved within the first chamber, the biasing spring returns the diaphragm to original position to prepare the pressure generated for the next operation.

The invention both as to its organization and principle of operation, together with further objects and advantages thereof will best be understood by reference to the following description taken in conjunction with the accompanying drawings of which:

FIG. 1 is a partially sectioned front elevational view of a machine of the type used herein;

FIG. 2 is a side sectional view taken along lines 2—2 of FIG. 1;

FIG. 3 is a schematic view of the dispensing arrangement;

FIG. 4 is a circuit diagram for the operation of the machine;

FIG. 5 is a cam closure diagram to effect the described operation;

FIG. 6 is a sectional view of the pressure chamber of FIG. 3 enlarged to show more detail; and

FIG. 7 is a sectional view of an alternate embodiment of the pressure chamber of FIG. 6.

Referring now to FIGS. 1 and 2 of the drawings, there is generally illustrated a dishwashing apparatus **10** of the character of that disclosed in U.S. Patent No. 2,620,811, granted on December 9, 1952, to Forrest A. Walker, and incorporating the features of the present invention. The apparatus **10** comprises an upstanding cabinet **11** housing an upstanding vat **12**, the cabinet **11** and the vat **12** being provided with aligned upstanding front openings therein that are, in turn, provided with an upstanding front door **13**. The front door **13** is pivotally mounted adjacent to the lower edge thereof within the lower front opening of the vat **12** and is movable between a substantially vertical closed position and a substantially horizontal open position. Also, the apparatus **10** comprises removable rack structure, not shown, that is adapted to support dishes and other utensiles within the vat **12** for washing purposes, the rack structure being movable into and out of the vat **12** through the front openings when the front door **13** occupies its open position. An impeller **14** is arranged within a sump **15** formed in the bottom of the vat **12** and is rotated by an asssociated electric drive motor **16** disposed below the bottom of the vat **12** for the purpose of producing a washing action within the vat **12**, when the front door **13** occupies its closed position and wash water is contained in the sump **15**.

For the purpose of supplying wash water to the vat **12**, there is provided an inlet conduit **17** that is adapted to be connected to a suitable water supply system, such, for example, as the usual hot water tank of the domestic plumbing system, by intervening pipe, not shown. The inlet conduit **17** communicates with the inlet port of a valve **18**; and the outlet port of the valve **18** communicates with a conduit **19** that is connected to an inlet fitting **20** arranged to admit water through the sidewall of the vat **12**. The valve **18** is normally biased into its closed position and is operated therefrom into its open position by an associated solenoid **18.1**; whereby the hot water from the inlet conduit **17**, being under positive line pressure, cascades from the inlet fitting **20** into the vat **12**, when the valve **18** occupies its open position with the solenoid **18.1** in its energized condition. When the solenoid **18.1** is subsequently deenerized, the valve **18** is returned back into its closed position in order to cut off the supply of hot water to the inlet fitting **20**.

A drain opening **15.1** is provided in the bottom of the sump **15** and communicates with the intake port of a drain pump **21** that is driven by an associated electric motor **22**, the pump **21** and the motor **22** being disposed below the bottom of the vat **12**. The drain pump **21** is

also provided with a discharge port that communicates with a conduit 23 that, in turn, communicates with a drain conduit 24 that is connected to drain plumbing, not shown. The conduits 23 and 24 are arranged in upstanding relation between the rear walls of the cabinet 11 of the vat 12, the outer end of the conduit 23 being downwardly turned and separated by a gap from the adjacent upper end of the conduit 24, the extreme upper end of the conduit 24 being provided with a funnel-like structure 24.1 disposed below the outer or discharge end of the conduit 23 so as to provide the previously-mentioned gap therebetween. When the drain pump 21 is at rest, water introduced into the vat 12 is accumulated in the sump 15; and when the drain pump 21 is operated by the motor 22 the water accumulated in the sump 15 is removed therefrom via the drain opening 15.1, and discharged via the conduit 23 into the drain conduit 24, from whence it is removed to the exterior via the drain plumbing, not shown.

Also, an electric heating unit 25 is arranged in the sump 15 in spaced-apart surrounding relation with respect to the impeller 14; which heating unit 25 is preferably of the sheathed helical resistance conductor type disclosed in U.S. Patent No. 1,367,341, granted February 1, 1921, to Charles C. Abbott. Also, a reticulated screen 26 is arranged in the bottom of the sump 15 in surrounding relation with respect to the impeller 14 for the purpose of preventing soil accumulating in the sump 15 from being thrown by the operating impeller 14 back into the supported dishes in a washing operation.

Further, the dishwashing apparatus 10 comprises a control circuit 30, shown in FIG. 4, that includes a program controller 31 that is housed between the cabinet 11 and the vat 12, the program controller 31 being provided with a manually operable control knob or dial 32 disposed adjacent to the upper left-hand front of the cabinet 11 and readily accessible from the exterior.

As illustrated diagrammatically in FIG. 4, the program controller 31 may comprise a synchronous timer motor 37 preferably of the "Telechron" type provided with a drive shaft 38 that is connected to transmission mechanism 39 having an output cam shaft 40, the outer end of which carries the manually operable knob 32, that is provided with a skirt 43 carrying indicia that cooperates with a suitable marker (not shown) carried by the front of the cabinet 11; whereby, as the knob 32 rotates during the operational cycle of the machine, the cooperation between the indicia and the marker indicates the progress of the washing cycle.

Also, the cam shaft 40 carries seven insulating control cams C1 to C7, inclusive, that respectively cooperate with seven sets of switch springs S1 to S7, inclusive. By the use of generally known slip clutch mechanisms the knob may be manually rotated to rotate the cam shaft to the desired start point. When the timer motor 37 is operating, the drive shaft 40 is driven step-by-step on a time basis as a result of the operation of the transmission mechanism so that the operating shaft 40 and consequently cams C1–C7 are also rotated step-by-step. Specifically, the transmission mechanism is so constructed and arranged that the cam shaft is driven through a small angle of about 5° in each step each 45 seconds.

The present invention provides within this framework, means for dispensing a liquid detergent into the incoming water during washing cycles of the machine, and a rinse water conditioner, to facilitate drying of the dishes, during a rinsing cycle of the machine.

The dispensing mechanism 50 of the present invention as shown best in FIG. 3 includes a first reservoir 51, containing a quantity of a suitable liquid detergent, a second reservoir 52, containing a quantity of a suitable wetting agent to be added to the water during a rinsing operation, and a pressure generator 53. The pressure generator 53 includes two chambers and a valve mechanism. The first of these chambers, 55, communicates with inlet conduit 19 by means of an intermediary passage 56. Passage 56 is angled from the conduit 19 toward the chamber 55 so that a proportion of the water flowing in the inlet conduit will be diverted into the chamber. This passage serves to keep chamber 55 at the same pressure level as that of the inlet conduit 19. Inlet chamber 55 is separated from the adjacent compression chamber 58 by means of a deformable diaphragm 60 so that there is no communication between chambers 55 and 58.

The diaphragm optimally may be fabricated in three laminations as shown in FIG. 6. A center lamination 61 of resilient material such as rubber sheet traverses the entire open area between adjacent chambers 55 and 58. Centrally on either side of lamination 61 are partial laminations 62, 62*a*, which may be sheet metal and serve to strengthen the diaphragm structure. The laminations may be joined in any suitable way to allow relative movement of the diaphragm in response to pressure changes within the chambers. The diaphragm 60 is normally biased to establish a normal volumetric relationship between chambers 55 and 58 by the use of a compression spring 63 bearing against diaphragm 60 on one end and against the valve wall 66 on the other side. Suitable stops 63*a* limit the movement of the diaphragm and thus establish the minimum volume of chamber 55. Wall 66 is used as a valve seating structure forming an element of a multiple valve compartment 67. Compartment 67 is subdivided by suitable wall means to provide individual chambers accommodating the respective valves 70, 71 and 72 which are spring-biased to assume a normally closed relationship with the valve seats in wall 66. Each of these valves is advantageously frusto-conical to insure proper seating.

Valve compartment 67 is divided into three cells, each of which includes one of the aforementioned valves. A first of these cells, 74, includes the valve 70, and is provided with an outlet from which extends a tube 75 which leads to and is secured into reservoir 51 above the normal fill level of said reservoir. Within the rear wall 76 of valve compartment 67 there is another opening to accommodate shaft 77 of valve 70. This opening about shaft 77 should have suitable sealing means such as an O ring (not shown) or equivalent, to prevent communication between the cell 74 and the atmosphere.

Valve 72 and its shaft 78 are fitted within cell 81 in the manner previously described for cell 74. A tube 82 leads from the end wall of cell 81 to connect into the reservoir 52 above its normal fill level.

The central cell 85 accommodates valve 71; its shaft 80 extends rearwardly from the frusto-conical base of valve 71 through rear wall 76 in the same manner as the previously mentioned shafts 77 and 78. This cell also contains two air holes 87 in communication with the ambient atmosphere through solenoid compartment 88. The functional necessity for these airholes will be discussed more fully later.

Each of the valve shafts previously described extends through wall 76 into the solenoid compartment 88. Within the solenoid compartment are arranged three solenoids 90, 91 and 92. Each of these solenoids is operatively associated with a respective one of the shafts 77, 78 and 80. In the normal (unoperated) position a return spring individual to each of the solenoids maintains its associated valve in closed position relative to wall 66. Thus spring 94 biases valve 70 to closed position, spring 95 biases valve 71 to closed position and spring 96 biases valve 72 to closed position. Each of these solenoids comprises a conventional electromagnetic coil which when energized draws its shaft leftwardly, as viewed in FIG. 6. Each of these solenoids is connected electrically to certain switch springs of FIG. 4.

To complete the description of the physical parts there are shown in FIG. 3 the reservoirs 51 and 52, each having a large storage area, a removable cover which may be of the screw-cap type, and two tubes leading there-

from. Reservoir 51 has a cover 100, the tube 75 leading to cell 74 as previously described, and a tube 101 leading from the bottom of the reservoir to the inlet fitting 20. Reservoir 52 has its cover 102, its tube 82 from the valve cell 81 and its additive dispensing tube leading to inlet fitting 20.

Turning now to the operation of the additive dispenser as best shown in FIGS. 3 and 6, the first requirement for operation of the dispenser is that water be flowing in inlet conduit 19 and as a result also flowing through intermediate conduit 56 to the chamber 55. The resulting pressure within chamber 55 moves diaphragm 60 to the left (in FIGS. 3 and 6) against the force exerted by compression spring 63. This movement of diaphragm increases the pressure in the compression chamber 58 by decreasing the volume while allowing no air to escape from the chamber and thus compressing the air therein. While this chamber 58 is at its high pressure state, energization of one or more of the solenoids will start the dispensing action. Assume solenoid 90 is energized. Valve 70 will be withdrawn from its seat in wall 66 and the compressed air in the chamber 58 will flow through the valve cell 74 and tube 75 to increase the pressure in reservoir 51 above the liquid detergent level. Liquid detergent from reservoir 51 will then flow through conduit 101 to fitting 20 for diffused flow into vat 12.

When it is desired to stop the flow of additive to the vat, the solenoid 90 is deenergized at which time spring 94 returns valve 70 to seated position. This operation is desirably coordinated with the operation of water inlet valve 18, whereby the valve 70 closes as water stops flowing in conduits 19 and 56. This action reduces the pressure in inlet chamber 55 at which time diaphragm 60 will be restored to its normal position by compression spring 63. At this time solenoid 91 is energized, opening valve 71. Air will then flow through openings 87 and the opening in wall 66 for an interval timed to normalize or pre-set the pressure in chamber 58. The system is then ready to dispense on the next flow of water in inlet conduit 19 concurrent with operation of one or more of the dispensing solenoids 90 and 92.

From the foregoing it can be appreciated that the amount of liquid dispensed is dependent on a number of variable factors. The first of these variables is the pressure generated by the water within chamber 55. This pressure is dependent on the volume of water inlet flow and it is proper that less additive be supplied when less water is supplied to the machine due to low water main pressure. In normal use with a constant main pressure this inlet pressure should be substantially constant. A second of these variables may be the air pressure within chamber 58. If, for example a small amount of additive is to be supplied, a prior short period of operation of normalizing solenoid 91 could be utilized. In this way, the pressure in chamber 58 would be restored to a less than atmospheric condition which would limit the amount of pressure buildup within compartment 58. A further variable factor would be the length of the concurrent operation of a dispensing solenoid and the flow of inlet water in conduit 19. A still further variable would be the number of dispensing solenoids operated simultaneously and the respective orifice sizes of the dispensing tubes. Thus within the present framework, the system is presettable for a number of dispensing cycles and dispensing volumes by adjustment of the variables mentioned.

Turning to FIG. 4, there is shown the program control circuit 30 previously described perfunctorily. This circuit includes the timer motor 37 driving seven cams C1–C7 step-by-step in a timed manner to open and close individual circuits through springs S1–S7. Each of the cams C1–C7 opens or closes spring contacts S1–S7 in the pattern shown in the cam closure diagram of FIG. 5. In this cam closure diagram, the functional use of each of cams is set out also. Thus cam C1 and spring S1 control the operation of the timer motor and these springs are closed throughout the entire operative cycle of the machine to connect the timer motor directly to the source leads 110 and 111. Cam C2 and spring S2 serve to connect the inlet water valve 18.1 to the A.C. source. Cam C3 when closed serves to connect return or normalizing solenoid 91 to the A.C. source. Cam C4 serves to connect the heater 25 and impeller motor 16 jointly to the current source. Thus heater 25 and motor 16 will operate concurrently under the control of cam C4 and its springs S4. Cam C5 and its springs control the operation of drain pump motor 22. Cams C6 and C7 respectively govern the operation of the additive solenoids 90 and 92. A door switch 114 of known design is used in the control circuit source path to open the circuit if the door is opened at any time during the operative cycle of the machine. Such a switch and its application to dishwashers is well known in the art.

The operation of the dishwasher is as follows: The operator opens the door and fills the racks (not shown) within vat 12 with the dishes to be washed. The reservoirs 51 and 52 should be checked to insure that sufficient liquid additive remains in each reservoir to supply the machine during the cycle. To facilitate this, the reservoirs are advantageously located at the front of the machine. A suitable opening or door 112 may be provided in the cabinet front wall to allow ready access to the reservoirs. Suitable markings (not shown) on the reservoirs 51 and 52 indicate the normal fill level. The covers should be replaced tightly on the respective reservoir containers.

When the operator has fully loaded the machine, the door is closed, thus closing door switch 114. The manual control knob may then be rotated to the starting position to position the cams at 0 time as shown in FIG. 5. At that time cams C1, C2 and C5 close their contacts to respectively close the timer motor 37, the water valve 18.1 and drain pump 22 to the current source. Water flows into the vat and with the drain and drain motor operative serves to flush the vat of any waste accumulated there. At the end of the flush period, cam C5 restores its contacts S5 which opens the circuit to the drain motor. The water valve continues to feed water to the vat and will tend to fill the vat. At this time cam C6 closes its switch S6 to feed detergent only to the machine. Because of the foaming propensities of the known wetting agents, it is undesirable to close switch S7, but in other applications of my invention it may be desirable to energize solenoids 90 and 92 simultaneously. Because of this, the cam diagram, FIG. 5, so indicates. Cam C4 closes contact S4 to circulate and heat the wash water. Near the conclusion of the fill period, solenoid 90 (and solenoid 92, if operated) is restored to close its respective valve. Inlet valve solenoid 18.1 closes shortly thereafter, and cam C3 activates S3 to operate the normalizing valve 71, as previously described. The wash period continues with only the impeller and the heater operating. This wash period as shown continues until more than ten minutes of the cycle period have elapsed.

At the conclusion of the wash period, the wash water must be drained. At this time, cam C4 restores shutting off the impeller and heater. Cam C5 is operated, actuating the drain pump motor to drain the wash water from the vat. During the drain period cam C2 is reactivated to energize inlet valve solenoid 18.1 to flush down all waste accumulated during the wash. The drain motor is then shut off by opening of contacts S5 at which time the vat fills with water for rinse. During the rinse water filling period, solenoid 92 is energized by closure of cam switch S7 to inject wetting agent into the incoming rinse water. Cam C7 then restores switch S7 and cams C2 and C3 close. These closures shut off the inlet water and serve to normalize the pressure chamber. The cycle then continues through the rinse cycle which is followed by a drain, a second rinse, a final

drain and a drying cycle. Dispensing of wetting agent may again occur during the second rinse cycle as indicated by the cam diagram.

In FIG. 7 there is shown an alternate embodiment of the pressure structure previously described. In this alternate embodiment, the deformable diaphragm of the prior embodiment has been replaced by a free-floating piston 120. Piston 120 serves to divide the pressure structure 53.1 of FIG. 7 into the front chamber 55.1 and the pressure chamber 58.1. The piston is normally positioned by compression spring 63.1 biasing the piston against stop members 63*a*. The operation of this piston is identical to the operation of the deformable diaphragm as can readily be appreciated.

A further change in the embodiment of FIG. 7 is that of utilizing a ball check valve 121 in place of the normalizing valve shown for the prior embodiment. In utilizing the check valve, the valve will seat itself on valve seat 122 which normally closes aperture 123. To insure that the ball will be held in place for further operations on its release and for governing the release pressure of the valve, biasing member 124 which may be a spring tensioned arm is secured to the adjacent wall and has a cup-like face 125 in surface contact with the free face of the ball valve. The check valve will normally be held in place by the pressure within chamber 58.1 and the bias of spring member 124. When the pressure in chamber 58.1 is increased by the movement of piston 120 incident to liquid flowing into chamber 53.1, valve 121 will seat more firmly covering orifice 122. When the pressure in chamber 58.1 has been dissipated sufficiently as determined by the tensional forces imparted to spring 124, the spring will deflect inwardly along with ball valve thus opening orifice 123 to the atmosphere thereby allowing chamber 58.1 to normalize. By using this embodiment solenoid 91, cam C3 and springs S3 may also be removed. With the exception of the operation of this check valve as the normalizing valve, the operation of this embodiment is identical to that previously described for the prior embodiment.

It should be noted that the dispensing sequence shown is merely exemplary of one of the possible dispensing arrangements and that many combinations of amount and types of additive may be utilized at each of the operative steps in the machine cycle.

While there has been described what is at present considered to be the preferred embodiment of the invention, it will be understood that various modifications may be made therein, and it is intended to cover all such modifications as fall within the true spirit and scope of the invention.

What is claimed is:

1. In a washing machine having a tub for bearing articles to be washed, control means for driving said machine through a sequence of operations, a water inlet path in communication with said tub, a water valve operated between closed and open positions by said control means for feeding water through said inlet path at predetermined periods during said sequence; means for injecting individual liquid additives into said inlet path at said predetermined periods for transmission into said tub, said injecting means comprising a chamber for receiving a flow of water from said inlet path during said feeding, a second chamber, a deformable diaphragm positioned between and separating said chambers, said diaphragm deformably responsive to the flow of liquid in said first chamber for moving into said second chamber to thereby increase the pressure in said second chamber, a plurality of individual additive reservoirs each substantially closed to the ambient atmoshpere, individual tubes extending from each of said reservoirs to said second chamber, individual valve closure mechanisms normally isolating each of said tubes from said second chamber, means including said control means for selectively operating each of said valve mechanisms in desired time relationship to the opening of said water valve to place the tube individual to said selected mechanism in communication with said second chamber whereby said increased pressure in said second chamber is transmitted to the reservoir individual to said selected mechanism, and a second tube leading from each of said reservoirs to said water inlet path to carry additive displaced by said pressure increase from the reservoir individual to said selected mechanism to said water inlet path.

2. In a washing machine having a tub for receiving articles to be washed, a water inlet to said tub, and means for supplying said tub from a domestic plumbing system having positive water pressure; means for adding quantities of liquids to the water entering said tub, comprising, in combination, a reservoir of said liquid having an enclosed space above the liquid therein; a first conduit communicating between said liquid and said tub water inlet to openly discharge thereinto; means for imposing on the space above said liquid a pressure to move said liquid through said conduit, including means providing a pressure generating mechanism having a hydraulic pressure chamber and a pneumatic pressure chamber; a second conduit communicating between said pneumatic pressure chamber and said space above the reservoir liquid level; a valve for controlling flow through said second conduit; means for establishing a normally closed condition of said valve; a water valve having its inlet supplied from said domestic plumbing system; a third conduit communicating between said hydraulic pressure chamber and the downstream side of said water valve; means providing a displaceable wall intermediate said hydraulic and said pneumatic pressure chambers; and means for opening said first and second-named valves in a desired time sequence whereby to apply water pressure to effect a displacement of said wall to increase the pressure in said pneumatic pressure chamber and to apply said pressure against the liqiud in the reservoir to enforce movement of liquid through said first conduit.

3. In a washing machine having a tub for receiving articles to be washed and a conduit subject to positive water line pressure for supplying water to said tub: mechanism for adding a liquid to said tub, comprising, in combination, a water valve controlling flow of water through said water conduit; a plurality of reservoirs of liquid; means for sealing the space above the liquid level thereof against the atmoshpere; a conduit from each of said reservoirs in open communication with said tub; means providing a rigid fluid-tight chamber; a flexible imperforate diaphragm forming a common wall dividing said chamber into first and second compartments, said diaphragm being mounted for movement relative to said compartments; a conduit communicating between the first of said compartments and the downstream side of said water valve; a conduit individual to each of said reservoirs communicating with said second compartment from above the liquid level of the respective reservoirs; a valve individual to each last-named conduit for opening and closing said water valve at predetermined intervals, whereby pursuant to a specific operational program, water at line pressure may be admitted to said first compartment to effect diaphragm movement to generate pressure in said second compartment sufficient to effect flow of liquid from a reservoir to said tub; and means for opening selected ones of said last-named valves to transmit said generated pressure to the associated reservoirs to enforce said liquid flow.

4. In a washing machine having a tub for receiving articles to be washed and a conduit subject to positive water line pressure for supplying water to said tub; and a water valve for controlling flow of water through said conduit to said tub; mechanism for adding a liquid to said tub, comprising, in combination, a reservoir of liquid having a space above the liquid level thereof sealed against the atmosphere, a conduit communicating between the liquid in said reservoir and said tub, said conduit being open to the atmosphere; means providing a rigid fluid-

tight chamber; a flexible imperforate diaphragm forming a common wall dividing said chamber into first and second compartments, said diaphragm being mounted for movement to generate pressure in said second compartment sufficient to enforce liquid flow from said reservoir to said tub; a conduit communicating between the first of said compartments and the downstream side of said water valve; a conduit communicating with said second compartment from above the liquid level of said reservoir; a valve individual to said last-named conduit for controlling flow therethrough; and time-cycle means for opening said water valve and said last-named valve in a desired operational sequence, whereby water at line pressure may be admitted to said first compartment to effect diaphragm movement to generate a liquid-flow enforcing pressure in said second compartment and said generated pressure may be transmitted to above the liquid in said reservoir to move liquid therefrom to said tub.

5. The washing machine according to claim 1, in which said diaphragm is biased to return in the direction of said first chamber, and said second chamber has further valve means operable upon return movement of said diaphragm to admit atmospheric air thereinto.

References Cited in the file of this patent

UNITED STATES PATENTS

2,266,205	Hunter	Dec. 16, 1941
2,592,885	Fox et al.	Apr. 15, 1952
2,592,886	Fox et al.	Apr. 15, 1952
2,713,748	Edwards et al.	July 12, 1955
2,910,075	Federighi et al.	Oct. 27, 1959
2,930,721	Tuthill	Mar. 29, 1960