Sept. 22, 1953 D. C. COOK ET AL 2,653,235

ELECTRONIC VOLTAGE REGULATOR CIRCUIT

Filed Jan. 3, 1946

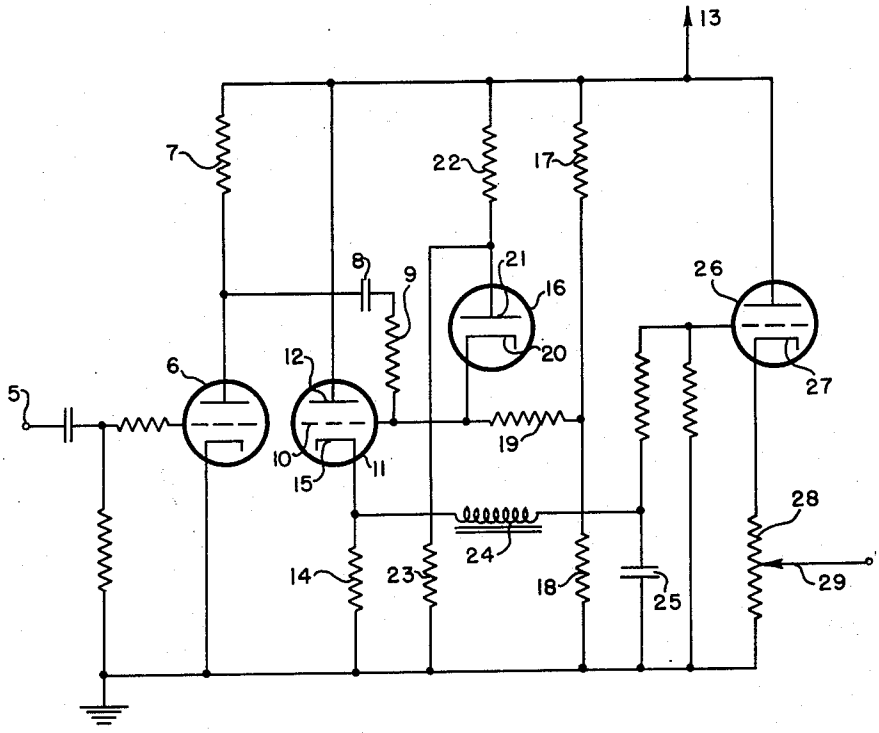

INVENTORS,
DAVID C. COOK
CLARKE M. GILBERT
BY
William D. Hall.
ATTORNEY

Patented Sept. 22, 1953 2,653,235

UNITED STATES PATENT OFFICE

2,653,235

ELECTRONIC VOLTAGE REGULATOR CIRCUIT

David C. Cook, Seattle, Wash., and Clarke M. Gilbert, Chappaqua, N. Y., assignors, by mesne assignments, to the United States of America as represented by the Secretary of War

Application January 3, 1946, Serial No. 638,889

5 Claims. (Cl. 250—27)

1

This invention relates to electrical circuits, and more particularly to A. C. voltage regulators.

It is often desirable in certain electronic systems such as radio detection and ranging apparatus, television apparatus, and the like, to produce an alternating voltage of which the amplitude is fixed to a high degree of accuracy.

It is an object of this invention to provide a new and improved electronic voltage regulator; to provide a voltage regulator having an A. C. voltage output substantially constant within wide ranges of input voltage; and to provide means for accomplishing the above objects which are simple and easily constructed.

Further objects, advantages, and novel features of the invention will become apparent from the description herein contained, in which reference is made to the accompanying drawing. The single figure of the drawing is a circuit diagram of the invention in its preferred embodiment.

Briefly stated, the described embodiment of the invention includes an overdriven amplifier whose input A. C. voltage may vary between wide limits; the output voltage of the amplifier approaches a square wave in shape, and further squaring and limiting is accomplished by networks associated with a cathode follower; the resulting square wave voltage of regulated amplitude is applied to a low-pass filter tuned substantially to the frequency of the input A. C. voltage; the filter output is a sine wave voltage of regulated amplitude, and is applied to a cathode follower circuit which functions as a matching means; the cathode follower output signal is a regulated sinusoidal voltage which may be adjusted to a desired amplitude.

Referring now to the drawing, the circuit reference point for the various voltages referred to hereinafter is designated by the conventional ground symbol. The various amplifiers or stages of the circuit are for convenience each hereinafter referred to by the same reference numeral as is applied to the vacuum tube associated therewith. A sinusoidal input voltage whose amplitude may vary may be applied to the illustrated embodiment of the invention at a terminal 5. This signal voltage is communicated to the conventional amplifier stage 6, which is preferably overdriven by the applied voltage. A nearly square wave output voltage of substantially fixed amplitude is thus developed across plate load resistor 7. This output voltage may vary somewhat in both amplitude and waveform, but is at all times sufficiently large to amply overdrive the succeeding stage. The output voltage of stage 6

2

is fed through condenser 8 and resistor 9 to grid 10 of tube 11.

The stage 11 is a cathode follower amplifier. Plate 12 of tube 11 is connected directly, as indicated by the arrowed lead 13, to the positive terminal of a source of direct current plate voltage (not shown), and the output voltage of this stage is developed across a cathode resistor 14 connected between cathode 15 of tube 11 and ground potential.

The grid circuit of the cathode follower stage 11 includes a diode tube 16 and a voltage dividing resistance network. Resistors 17 and 18 are connected in series between the plate supply potential and ground, and a resistance 19 connects their junction to grid 10 of tube 11 and to cathode 20 of diode tube 16. Plate 21 of the diode tube is connected through resistance 22 to the plate voltage source, and to ground through a resistance 23. The functioning of the grid circuit of cathode follower stage 11 will become apparent hereinafter.

The output signal developed across resistance 14 is fed from cathode 15 to a series tuned circuit composed of inductance 24 and capacitance 25. The voltage developed across capacitance 25 of the series tuned circuit is sinusoidal and has a limited or regulated amplitude. This sinusoidal voltage is applied to the grid circuit of a conventional cathode follower stage including a tube 26 and a cathode resistor 28 of potentiometer type. The cathode follower stage 26 here functions as a high impedance load across capacitance 25 of the series tuned circuit, preserves the waveform of voltage developed across condenser 25, and enables a desired fraction of the capacitance voltage to be obtained without affecting the impedance load across the capacitance.

The output of stage 6 approximates a square wave voltage, due to the overdriven action of the amplifier circuit. The grid circuit of tube 11 further shapes this voltage into a substantantially square wave voltage whose amplitude is fixed at a constant value. Amplitude-limiting of the negative-going portion of the voltage at grid 10 is accomplished by diode 16. Plate 21 of diode 16 is held at a substantially fixed voltage by reason of its connection to the junction of voltage dividing resistors 22 and 23. The signal voltage at grid 10 is prevented from swinging much below the value of this fixed voltage, because the voltage at cathode 20 then tends to be reduced below the fixed voltage of plate 21, tube 16 conducts heavily, and a low impedance is then presented across the grid circuit which limits the ampli-

tude of the negative going voltage and provides a good square-wave form for this negative going portion of the signal. The positive going portion of the signal is already substantially in square waveform, because it is developed during the cut-off time of over-driven amplifier 6. It is desirable, however, that the potential at grid 10 of cathode follower 11 at no time exceeds the potential at plate 12, since the grid would then draw current which would tend to distort the desired square wave developed across cathode resistor 14. The maximum potential at grid 10 may be prevented from exceeding the potential at plate 12 by properly proportioning the network of resistors 9, 18, and 19, with due consideration to the D.-C. voltage at the junction of resistors 17 and 18.

Condenser 8 is not essential to the proper operation of the circuit. Grid 10 may be connected to the plate of tube 6 through resistor 9. The maximum potential of grid 10 is in this instance prevented from exceeding the potential at plate 12 by appropriate choice of values for the network of resistors 7, 9, 17, 18, and 19.

The input voltage to terminal 5 should be sufficiently large to overdrive stage 6, and may vary between wide limits. There is produced at grid 10 a square wave voltage controlled in amplitude within close limits. The voltage developed across cathode resistor 14 of cathode follower 11 is a square wave of regulated amplitude.

To obtain a sinusoidal voltage at the fundamental frequency of the input signal, a tuned filter circuit is employed as illustrated in the preferred embodiment wherein inductance 24 and capacitance 25 are tuned to substantially the fundamental frequency. The voltage fed to cathode follower stage 26 is taken from across condenser 25 to secure a low pass filter effect, and it is therefore a pure sinusoid of fixed amplitude determined by the amplitude of the square wave voltage developed across resistor 14. An advantage of feeding the filter circuit from a cathode follower is that it provides a low impedance source for the filter circuit, and thereby the signal voltage across resistor 14 is substantially unaffected in waveform and amplitude by the presence of following circuits.

The amplitude-regulated voltage from condenser 25 is applied to the high impedance grid circuit of a conventional cathode follower stage utilizing a tube 26. A suitable fraction of the output voltage at cathode 27 may be obtained at a variable tap 29 of cathode resistor 28, so that the impedance of any following stage or device does not affect the circuit including condenser 25 and thereby destroy the filtering action or pass-characteristic of that circuit. Thus, a sinusoidal voltage is obtained between tap 29 and ground, having a selected and well-regulated amplitude.

It will be apparent to those skilled in the art that many variations of the circuit herein disclosed are possible without departing from the spirit of the invention. Therefore, it is not desired to restrict the scope of the invention to the precise embodiment herein disclosed.

What is claimed is:

1. A regulated, low impedance power supply for obtaining an alternating voltage output of constant amplitude from an alternating voltage input of a single fixed frequency and varying amplitude, said supply comprising limiting means, means for applying said alternating voltage input as an input to said limiting means to obtain a fixed amplitude square wave voltage as an output from said limiting means, filter means resonant at said fixed frequency, means applying said square wave voltage as an input voltage to said filter means to obtain a sinusoidal voltage output having said fixed frequency and a constant amplitude, impedance transforming means having a high input impedance and a low output impedance to prevent loading of said filter means, and means applying said sinusoidal voltage output as an input to said impedance transformer means to obtain said alternating voltage output as the output of said impedance transforming means.

2. A regulated, low impedance voltage source, as defined in claim 1, wherein said limiting means comprises an electronic tube voltage amplifier, wherein said varying amplitude alternating voltage input is applied as an input to said amplifier tube, the minimum value of said input being of sufficient magnitude to overdrive said amplifier, a cathode follower circuit, means for applying the output of said amplifier as an input to said cathode follower circuit, and means coupling the output of said cathode follower circuit to said filter means.

3. A regulated, low impedance voltage source as defined in claim 2, comprising means providing a first point of reference potential, means providing a second point of potential having a magnitude that is more positive than said first point, a unidirectional conducting device connected between said first point of potential and the input of said cathode follower, and resistive means connecting said second point of potential to said input of said cathode follower, said device being connected to become conductive when the potential at the input of said cathode follower is more negative than said first point of potential.

4. A regulated, low impedance voltage source as defined in claim 2, wherein said filter means comprises a series tuned circuit composed of an inductance and capacitance tuned to substantially the fundamental frequency of said amplifier input, said filter means having an output voltage developed across said capacitance.

5. A regulated, low impedance voltage source as defined in claim 4, wherein said impedance transforming means comprises a second cathode follower tube, and means applying the output voltage developed across said capacitance as an input to said second cathode follower circuit, said alternating voltage output being obtained as an output of said second cathode follower circuit.

DAVID C. COOK.
CLARKE M. GILBERT.

References Cited in the file of this patent

UNITED STATES PATENTS

Number	Name	Date
2,200,055	Burnett	May 7, 1940
2,230,926	Bingley	Feb. 4, 1941
2,340,364	Bedford	Feb. 1, 1944
2,395,517	Stoller	Feb. 26, 1946
2,408,061	Grieg	Sept. 24, 1946
2,544,226	Herold	Mar. 6, 1951

OTHER REFERENCES

"Transmission Networks and Wave Filters," by Shea, published by Van Nostrand Co. in 1929; page 291 relied on.