June 26, 1923. 1,459,726

A. GOODHEIM.

APPARATUS FOR AUTOMATICALLY STARTING ENGINES OF MOTOR VEHICLES

Filed July 15, 1920

FIG. 1.

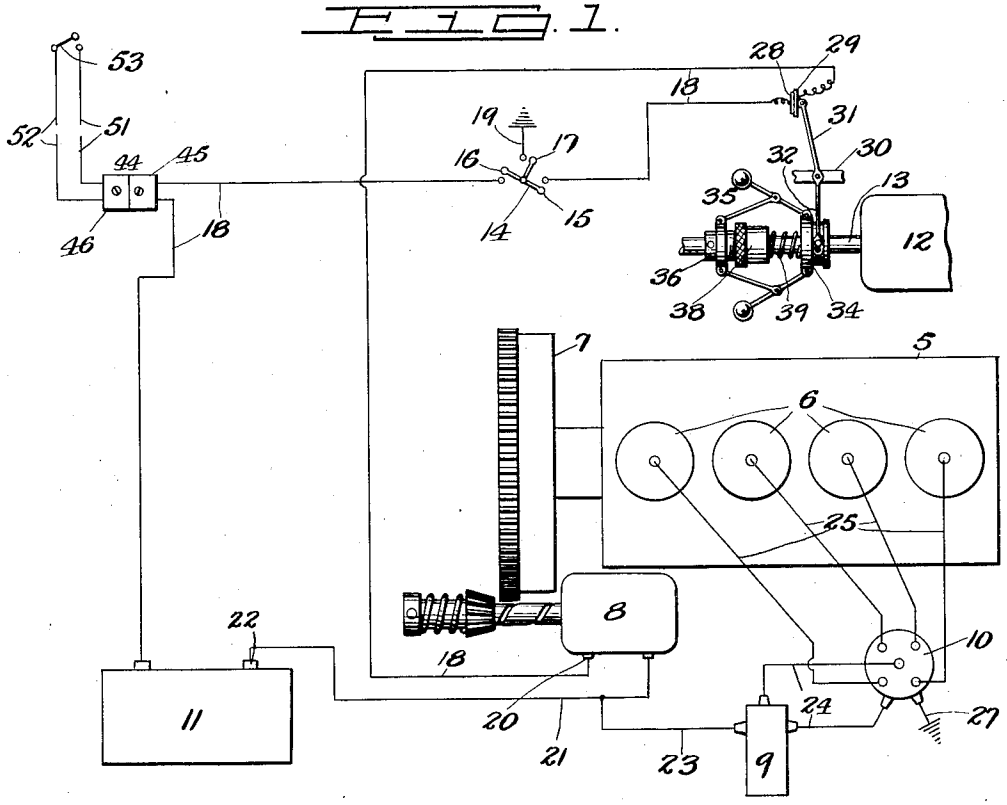

FIG. 2.

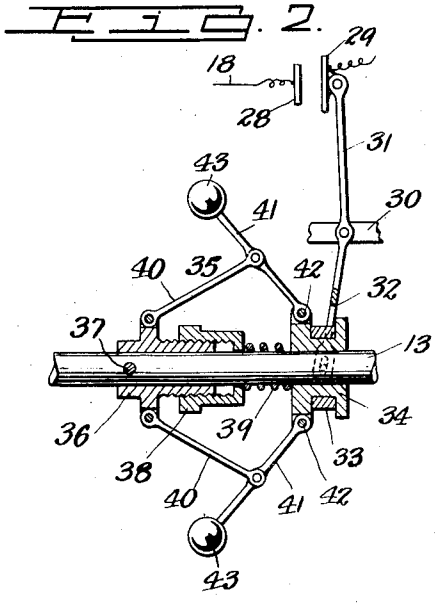

FIG. 3.

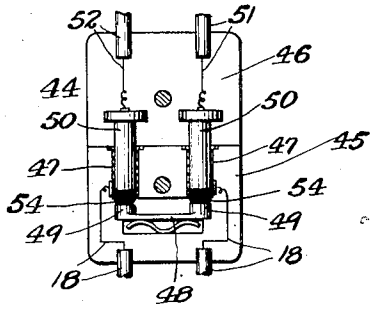

INVENTOR
Albert Goodheim.
BY
Edgar Tate & Co.
ATTORNEYS

Patented June 26, 1923. 1,459,726

UNITED STATES PATENT OFFICE.

ALBERT GOODHEIM, OF WEST HOBOKEN, NEW JERSEY.

APPARATUS FOR AUTOMATICALLY STARTING ENGINES OF MOTOR VEHICLES.

Application filed July 15, 1920. Serial No. 396,558.

To all whom it may concern:

Be it known that I, ALBERT GOODHEIM, a citizen of the United States, and residing at West Hoboken, in the county of Hudson and State of New Jersey, have invented certain new and useful Improvements in Apparatus for Automatically Starting Engines of Motor Vehicles, of which the following is a specification, such as will enable those skilled in the art to which it appertains to make and use the same.

This invention relates to motor vehicles, and more particularly to the engines thereof and the starting mechanisms of such engine; and the object of the invention is to provide means whereby the circuit controlling the starting mechanism may be automatically opened and closed, said means being controlled by a governor device actuated by the engine whereby, if an engine is accidentally stalled or the revolutions thereof decreased beyond a predetermined degree, the starting mechanism will be automatically put in operation to prevent such stalling and to increase the speed of the engine; a further object being to provide means whereby the circuit to the starting mechanism may be closed at a point independent of the motor vehicle and at a predetermined distance therefrom; and with these and other objects in view the invention consists in an apparatus of the class and for the purpose specified which is simple in construction and operation and efficient in use, and which is constructed and operated as hereinafter described and claimed.

The invention is fully disclosed in the following specification, of which the accompanying drawing forms a part, in which the separate parts of my improvement are designated by suitable reference characters in each of the views, and in which:—

Fig. 1 is a diagrammatic view of the engine of a motor vehicle and showing the starting mechanism of such engine, the electric circuit controlling said starting mechanism and also the ignition circuit, and showing my improvement in connection therewith;

Fig. 2 a sectional view of a part of the construction shown in Fig. 1 on an enlarged scale and showing the same in a different position; and,

Fig. 3 a sectional detail view of another part of the construction shown in Fig. 1 and on an enlarged scale.

In Fig. 1 of the drawing, I have indicated at 5 the engine of a motor vehicle, at 6 the cylinders of said engine and at 7 the fly wheel thereof. The starting mechanism or motor is shown at 8, the coil at 9, the distributor at 10, the battery at 11, and the generator at 12 having a shaft 13.

The above described construction is old and forms no part of this invention, and is merely shown and described to indicate one use of my invention. In Fig. 1 I have shown at 14 a switch device having three contact points 15, 16, and 17, and this switch device controls the ignition as well as the starting mechanism circuits, the contact points 15 and 16 are adapted to close the circuit through a wire 18 which connects with the battery 11, while the contact point 17 completes the grounding circuit 19. When the switch device is closed it will be seen that the circuits to the starting mechanism 8 and the ignition are closed. The wire 18 in the battery 11 connects with the motor of the starting mechanism 8, as shown at 20, and another wire 21 is connected with the motor of said mechanism and with the battery as shown at 22, and a wire 23 from the coil 9 is connceted with the wire 21 and two wires 24 from the coil 9 are connected with the distributor 10, which distributor has four wires 25 which are connected with the spark plugs of the cylinder 6 and with a ground wire 27.

It will be understood that with the exception of the three point switch device, the above described wiring will be the same as that usually employed and, in the practice of my invention, I place in the wire 18 of the battery 11 at a predetermined point two contact devices 28 and 29 which are adapted to make and break the circuit in said wire. Pivoted to a suitable support 30 is a lever 31, one end of which is connected with and adapted to operate the contact device 29, and the other end 32 of which is forked and pivotally connected with a collar 33 mounted on a sleeve 34 which is slidably mounted on the shaft 13 of the generator in the form of construction shown.

The movement of the sleeve 34 is controlled by a governor device 35 comprising a sleeve member 36 secured to the shaft 13 as shown at 37, the inner end of said sleeve is externally threaded to receive an adjustable coller 38 which is adapted to control the tension of a spring 39 mounted

between said collar and the movable sleeve 34, which spring serves to move the sleeve 34 into position to close the circuit between the contact devices 28 and 29.

The sleeve 36 carries two arms 40 which are pivoted approximately centrally of other arms 41 pivoted to the movable sleeve 34 as shown at 42, and the free ends of the arms 8 carry weights 43. From the foregoing it will be seen that the governor device 35 will be normally held in an inoperative position and the circuit through the contact devices 28 and 29 will be closed by the action of the spring 39 upon the sleeve 34, and when it is desired to start the engine 5, the switch device 14 is closed by the operator, this operation will close the ignition circuit and also close the circuit to the starting mechanism 8 and the engine will be started, and when the speed or revolutions of the engine have reached a predetermined degree or a predetermined number of R. P. M.'s, the operation of the governor device will automatically separate the contact devices 28 and 29 and break the circuit to the starting mechanism without interfering with the ignition circuit. As long as the engine 5 is in operation, or is revolving at a speed above a predetermined speed the contact devices 28 and 29 will be held apart, but when the revolutions of the engine decrease below said speed, the contact will be completed between the devices 28 and 29 and the engine again automatically started by the starting mechanism 8. It will, therefore, be seen that my improvement will automatically prevent the stalling of a motor, or will automatically restart a motor when stalled and by properly adjusting the collar 38 the closing of the circuit through the contact devices 28 and 29 may be regulated. In order to stop the engine 5 the switch device 14 must be thrown into inoperative position, and this breaks the ignition circuit as well as the circuit to the starting mechanism 8.

I may also employ means for starting the engine 5 of the vehicle at a predetermined point independent of the vehicle, such for example, in a room of a home or in a room independent of the storage room or garage for said vehicle, and in accomplishing this result I mount in the wire 18 a switch device 44 preferably of the plug type and comprising a socket member 45 and plug member 46, the socket member 45 being mounted in connection with the vehicle in a convenient place, while the plug member 46 may be detached from the socket member whenever desired.

The socket member 45 is provided with two sleeve contacts 47 with which the separate ends of the wire 18 are connected and a spring actuated circuit maker and breaker 48 is mounted in said socket member and provided with two studs 49 adapted to normally pass into the inner ends of the sleeves 47 to complete the circuit through the wire 18 when the plug member 46 is withdrawn from the socket member 45.

The plug member 46 is provided with two projecting rods or plugs 50 which are adapted to pass into the sleeves 47 and circuit wires 51 and 52 are connected with the plugs 50, and the free ends thereof are adapted to be joined by a switch device 53 shown in Fig. 1 of the drawing.

By employing the switch device 44 it will be seen that when the plug member 46 is withdrawn from the socket member 45, the circuit will be complete through the wire 18 and my improvement will operate in the same manner as though the switch device 44 was not employed, but by inserting the plug member 46 in the socket member 45, the inner ends of said plug member which are provided with non-conducting tops 54 will move the studs 49 of the make and break device 48 out of engagement with the sleeves 47, and the circuit through the wires 18 will pass through the wires 51 and 52 to the switch device 53. With the parts of the switch device 44 in this position, or in the position shown in Figs. 1 and 3 of the drawing, and presuming that the switch device 14 were closed and the switch device 53 open, the engine 5 may be started from the point at which the switch device 53 is located by closing said switch device, this operation as will be seen will close the circuit to the starting mechanism 8 and after the engine has started, the circuit to the starting mechanism will be automatically broken in the manner hereinbefore described, and when it is desired to operate the vehicle the plug member 46 will be withdrawn from the socket member 45, and in this operation the circuit in the wire 18 will be completed by the make and break device 48 in the socket member 45.

From the foregoing it will be apparent that I provide a very simple and efficient means whereby any motor vehicles, or the engines thereof, may be started at a predetermined distance from the vehicle, or the storage room or compartment of such vehicle for the purpose of warming up the engine or allowing the same to become heated prior to the operation and use of the vehicle, and while I have shown the governor device 35 mounted in connection with the generator shaft, it will be apparent that I am not necessarily limited to this specific use as the governor device may be rotated through any member or shaft which is in operation when the engine of the vehicle is in operation. I am also not necessarily limited to the use of my improvement in connection with any specific form of starting mechanism, and various changes in and modifications of the construction herein shown and described

may be made, within the scope of the appended claims, without departing from the spirit of my invention or sacrificing its advantages.

Having fully described my invention, what I claim as new and desire to secure by Letters Patent, is:—

1. The combination with the ignition and starting mechanism circuits of the engine of a motor vehicle, of a governor device operated by means in operative connection with the engine, make and break devices in the circuit to the starting mechanism, said make and break devices being in operative connection with and adapted to be operated by said governor device whereby when the engine is in operation the circuit through said make and break devices is open and whereby when the engine is stalled the circuit through said make and break devices will be closed and the engine automatically started by said starting mechanism, a switch device for controlling the starting mechanism and ignition circuits, and another switch device in the circuit to the starting mehanism, said switch device being provided with means for normally closing said circuit.

2. The combination with the ignition and starting mechanism circuits of the engine of a motor vehicle, of a governor device operated by means in operative connection with the engine, make and break devices in the circuit to the starting mechanism, said make and break devices being in operative connection with and adapted to be operated by said governor device whereby when the engine is in operation the circuit through said make and break devices is open and whereby when the engine is stalled the circuit through said make and break devices will be closed and the engine automatically started by said starting mechanism, a switch device for controlling the starting mechanism and ignition circuits, another switch device in the circuit to the starting mechanism, said switch device being provided with means for normally closing said circuit, means involving circuit wires for opening the circuit through said last named switch device, and a switch device in the circuit wires of said last named means for controlling the circuit to said starting mechanism.

3. The combination with the ignition and starting mechanism circuits of the engine of a motor vehicle, of make and break devices in said circuits, a governor device adapted to operate said devices to control the opening and closing of the circuit therethrough whereby said governor device will operate to automatically close the starting mechanism circuit through said make and break devices to start the engine when stalled, a switch device for controlling said starting mechanism and ignition circuits, and another switch device in the circuit to the starting mechanism, said switch device being provided with means for normally closing said circuit.

4. The combination with the ignition and starting mechanism circuits of the engine of a motor vehicle, of make and break devices in said circuits, a governor device adapted to operate said devices to control the opening and closing of the circuit therethrough whereby said governor device will operate to automatically close the starting mechanism circuit through said make and break devices to start the engine when stalled, a switch device for controlling said starting mechanism and ignition circuits, and another switch device in the circuit to the starting mechanism, said switch device being provided with means for normally closing said circuit, means involving circuit wires for opening the circuit through said last named switch device, and a switch device in the circuit wires of said last named means for controlling the circuit to said starting mechanism.

In testimony that I claim the foregoing as my invention I have signed my name in presence of the subscribing witnesses this sixth day of July, 1920.

ALBERT GOODHEIM.

Witnesses:
E. ROBERT GRAUERT,
H. EWALD.