United States Patent

Lundsager

[15] **3,656,999**

[45] **Apr. 18, 1972**

[54] COATED ROLLER AND METHOD OF COATING

[72] Inventor: **Christian B. Lundsager,** Ashton, Md.

[73] Assignee: **W. R. Grace & Co.,** New York, N.Y.

[22] Filed: **Nov. 24, 1969**

[21] Appl. No.: **879,141**

[52] **U.S. Cl.** .....**117/93.31,** 117/94, 117/161 R, 117/161 UZ, 117/161 ZB, 204/159.11, 260/79, 260/830 S

[51] **Int. Cl.**.....**B44d 1/50**

[58] **Field of Search** .....117/93.31, 161 R, 161 ZB, 161 UZ, 117/94; 156/272, 446; 29/129.5, 130, 132; 118/409; 204/159.11, 159.22, 159.23, 159.15; 260/79, 830 S, 887, 874, 859 R

[56] **References Cited**

UNITED STATES PATENTS

1,182,982	5/1916	Crump	118/409
2,270,177	1/1942	Vawryk	118/409
3,369,922	2/1968	Surchek	117/94 X
3,506,626	4/1970	Warner et al.	260/79
3,535,193	10/1970	Prince	117/93.31 X

Primary Examiner—Alfred L. Leavitt
Assistant Examiner—J. H. Newsome
Attorney—Kenneth E. Prince

[57] **ABSTRACT**

Industrial rollers are prepared by photocuring a coating of photocurable composition on a metallic core. As the core cylinder is rotated, a thin layer of photocurable composition containing an epoxy polyene is fed intermittently or continuously onto the rotating cylinder, where it can optionally be smoothed by a doctor blade. That layer is applied as an adhesive layer. Then at least one complete layer of another photocurable composition is fed onto the coated rotating cylinder. The coating is photocured by an ultraviolet light source, which is preferably located on the cylinder side opposite the places where the photocurable compositions are applied, so that premature hardening does not occur in the feed stock. Multiple, consecutive layers of the second photocurable composition can be built up on the coated core, each (after the first) being placed upon a partially hardened photocured sublayer. In this manner, the photocured material on the rigid core can be built up to any desired and practical thickness. The photocured surface of the roller can be ground and buffed to make a final product of accurately controlled dimensions.

17 Claims, 4 Drawing Figures

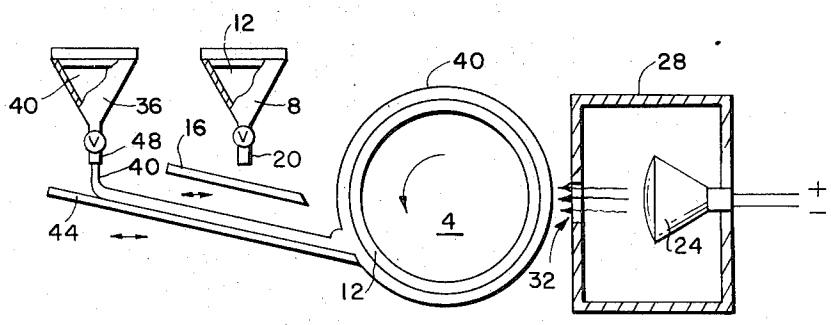

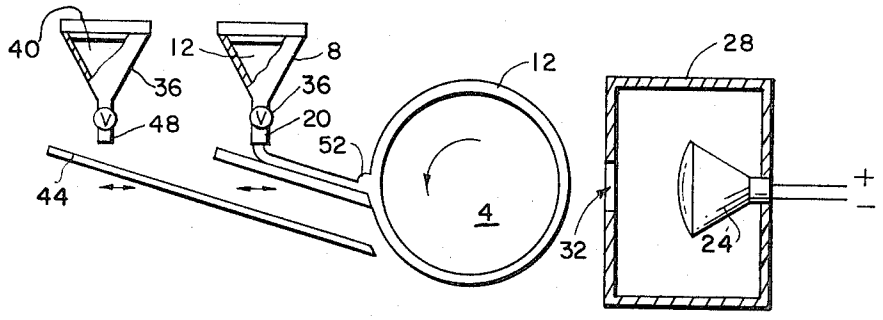

FIG. 1

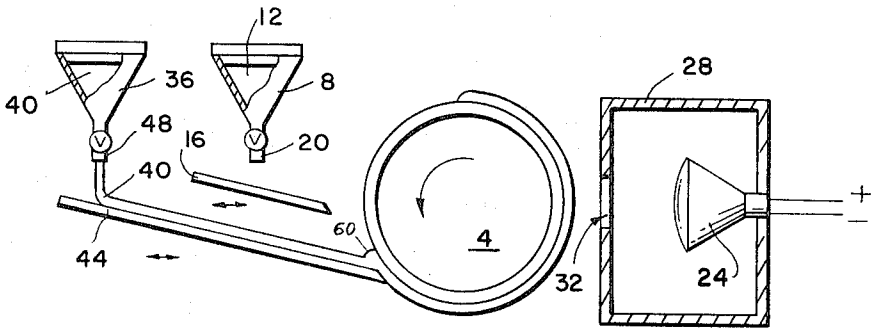

FIG. 2

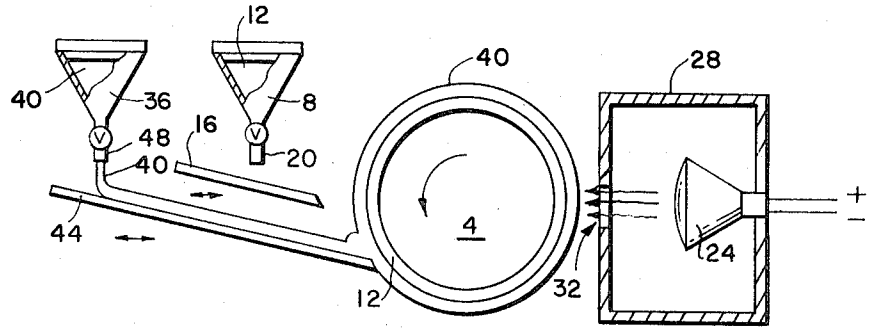

FIG. 3

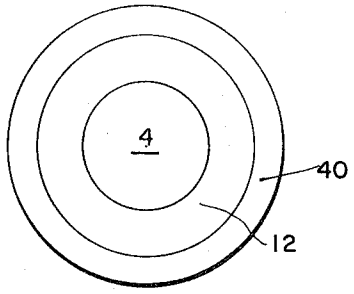

FIG. 4

INVENTOR
CHRISTIAN B. LUNDSAGER

BY Virgil H Marsh
ATTORNEY

COATED ROLLER AND METHOD OF COATING

BACKGROUND OF THE INVENTION

1. Objectives of the Invention

It is an object of this invention to prepare and apply coatings to rigid cores. Other objectives will be obvious to those skilled in the art.

2. Prior Art

A process is disclosed in U.S. Pat. No. 3,247,012, whereby a continuous coating is applied by brushing, dipping or spraying to an article in liquid form, and polymerized in situ by passing the coating and web under a beam of polymerization effecting electrons from an electron emitting means. A typical coating composition is a solution of an unsaturated polyester in a vinyl monomer, which upon copolymerization forms a cross-linked coating.

Typical means of dip coating a photosensitive layer, e.g., bichromated gelatin, onto a printing cylinder is given in U.S. Pat. No. 2,357,476. Another typical means of applying photosensitive layers, e.g., bichromated glue, gum, etc., onto a printing cylinder is given in U.S. Pat. No. 2,766,719. This means applies the layer in a conventional manner, but drying is required before imaging. In the above process, the photosensitive layer is exposed imagewise, the image is then developed reliefwise, and the nonimaged areas of the cylinder are etched. U.S. Pat. No. 3,304,909 describes a method for coating cylinders with urethanes which are subsequently subjected to a pressure roller and are cured by heating the layer for a substantial period of time as the cylinder is rotated.

Rubber coated rollers for various industrial applications are generally made by surrounding the cylindrical core with a liquid or solid elastomer in an appropriately sized cylindrical mold. The mold is heated at elevated temperatures for long periods of time to vulcanize (or set) the rubber.

BROAD DESCRIPTION OF THE INVENTION

Industrial rollers are prepared by placing a layer of a photocurable composition containing an epoxy polyene on a revolving rigid core, adding part of a layer of a second photocurable composition, on a revolving rigid core, and photocuring the coating as the remainder of the second layer is added. The core, e.g., metallic cylinder, is rotated at a relatively slow rate of speed, i.e., between about 1 r.p.m. and 50 r.p.m., or just below that speed at which centrifugal force, which depends upon the diameter of the roller, begins to distort the coating before it is photocured. A thin layer of the first composition is fed onto the rotating core to serve as an adhesive layer on the metallic core. A thin layer of the second photocurable composition is then fed onto the rotating core (cylinder), where it can optionally be smoothed by a doctor blade. Liquids of various viscosity ranges or thixotropic pastes are preferred but with suitable modifications of the feeding mechanism, semi-solid or "solid" resinous or elastomeric photocurable compositions can also be handled without departing from the scope of this invention; the main point is to select a photocurable composition which will have the desired physical properties and solvent resistance for the intended application that the roller will be used for. The photocuring starts after the second layer has been partially applied. This is crucial to obtaining a roller which has a coating that strongly adheres to the core. During the application of the photocurable composition to the rotating core, the photocurable composition is intermittently or preferably continuously photocured by an ultraviolet light source. Preferably, the U. V. light source is located on the cylinder side opposite the place where the photocurable composition is applied so that premature hardening does not occur in the feed stock, which is maintained in the "shadow" cast by the core relative to the U. V. light source. Multiple consecutive layers of the same or different photocurable compositions can be placed on the rigid core containing the adhesive layer. In this manner, the photocured material on the rigid core can be built up to any desired and practical thickness, say, for example, 2 inches or more. Each layer, as it is applied, will normally be between about 0.5 and about 125 mils in thickness, although this is not critical and may vary greatly depending on the speed of rotation of the core, the viscosity of the photocurable composition, and the curing rate of the photosensitive material. The photocured surface on the roller can, if desired, be ground and buffed to help make an end product having an extremely smooth surface and an accurate cylindrical shape.

An advantage of this invention is that expensive molds or long heating cycles are not needed to coat a rigid core. The process of this invention is quick, convenient and economical, and produces a superior, fully cured product, which usually has an extremely smooth, glaze-like surface. Post-fabrication curing or aging steps are not required, since the application and photocuring to completion (e.g., to constant final physical properties) of the photocurable composition is almost simultaneous. The most salient advantage is the tremendous adhesion of the coating to the core that is obtained.

DETAILED DESCRIPTION OF THE INVENTION

The invention may be more clearly understood by reference to the following detailed description which is non-limiting but which merely exemplifies one of the preferred embodiments:

FIG. 1 is an end view, partially cross-sectional, of the apparatus during the coating of the adhesion layer on the core;

FIG. 2 is the same as FIG. 1 except that the coating of the roller layer has just started;

FIG. 3 is the same as FIG. 2 except that the coating of the roller layer and the photocuring is under way; and

FIG. 4 is a transverse cross-sectional view of a coated and photocured roller.

Referring to FIG. 1, roller core 4 rotates in a counterclockwise direction. The mounting and moving means (not shown) for roller core 4 is any conventional device capable of rotating the core about its own axis (e.g., it is mounted on a lathe). Roller core 4 (1.5 dia. by 10 in.) can be cleaned before coating, and, in case where metal rollers comprised of steel, can be sand-blasted prior to mounting to remove any rust and to expose a clean and slightly roughened coating surface. Reservoir 8 which may be heated if desired, contains photocurable composition 12 which contains a liquid epoxy polyene. (After photocurable composition 12 is prepared, it must be stored in a dark area, i.e., in the absence of ultraviolet light.) Delivery tray 16 is in a slightly sloping position, with the lower end (delivery lip) about 2 to 20 mils from the surface of roller core 4 during operation and start up and with the upper end (receiving portion) positioned under delivery throat 20 of reservoir 8. A plurality of delivery throats, etc., can be used to insure that there is coverage over the entire roller length. Photocurable composition 12 is gravity fed down delivery tray 16. Delivery tray 16 is moveable in a horizontal manner in relationship to roller core 4. Also delivery tray 16 has side walls (not shown) to prevent lateral overflow.

U.V. light source 24 (e.g., one or several 275 watt RS sunlamps) is located so that its irradiating face is about 1.5 inches from the surface of roller core 4. Several sunlamps can be used or a long tubular lamp could be used. Shield 28 encompasses light source 24, except that slit 32 (0.75 in. by 10 in.) allows the ultraviolet light to be beamed directly onto the surface of roller core 4.

Reservoir 36, which may be heated if desired, contains photocurable composition 40. Delivery tray 44 is in a slightly sloping position, with the lower end (delivery lip) about 2 to 20 mils from the surface of roller core 4 (after the adhesion layer has been coated) during operation and with the upper end (receiving portion) positioned under delivery throat 48 of reservoir 36. A plurality of delivery throats, etc., can be used to insure that there is coverage over the entire roller length. Delivery tray 44 is shown positioned below delivery tray 16, but can be above it, etc. Photocurable composition 40 is gravity fed down delivery tray 44. Delivery tray 44 is movable in a horizontal manner in relationship to roller core 4. Also,

delivery tray **44** has side walls (not shown) to prevent lateral overflow. U. V. light source **24** is located so that it does not expose photocurable composition **40** in delivery tray **44**.

In operation, photocurable composition **12** is coated onto rotating roller core **4** to put an adhesive layer **12** thereon. The thickness of the adhesive layer **12** can be any thickness, but is preferably between 0.0001 and 0.01 inches in thickness. Any number of roller core passes or rotation can be used to place the adhesive layer thereon. The edge of delivery tray **16** is slowly moved away from roller core **4** as composition **12** is coated thereon. During the coating operation, "rolling bank" **52** of viscous composition **12** is preferably maintained in the end of delivery tray **16** against the surface of core **4**. After the adhesive layer **12** is applied, delivery tray **16** is backed off (valve **56** having already been turned off). Delivery tray **44** is advanced into delivery position and composition **40** is released from reservoir **16**. After one or so complete passes in coating composition **40** on the adhesive layer **12**, the photocuring of the entire coating on core **4** is started by turning on U. V. light source **24**. The contiguous photocuring of the adhesive layer (**12**) and the photocurable layer (**40**) gives a contiguous coating that will not separate. During the coating operation, "rolling bank" **60** of viscous composition **40** is preferably maintained in the end of delivery tray **44** against the coated surface of core **4**. The coated thickness can be increased by applying more coatings (passes)of uncured photocurable composition **40** on photocured composition **40** by moving the edge of delivery tray **16** slowing away from coated roller core **4**. Coating thickness as great as about **2.0** or more inches can be obtained, and customary total thicknesses up to about 0.5 to 1.0 inches are easily obtained. After achieving a desired coating thickness, delivery tray **44** is retracted away from the coated surface of roller **4** (after valve **64** has been turned off). The roller is rotated for several seconds to several minutes thereafter to insure a complete photocure of the coating of photocurable composition **40**. The coatings are essentially non-tacky and are usually applied in less than about 15 to 30 minutes of total operating time, depending on the ultimate coating thickness, the core diameter, the intensity of the light source, etc. The rollers have excellent characteristics and capabilities for the printing and graphic arts industries and have coatings that are essentially contiguous and that have good adhesion to core, particularly to metal cores and more particularly to steel cores.

The roller core can be constructed of non-metallic substances, but this invention is specifically and preferably directed to metallic roller cores because the photocured sublayer containing the reacted epoxy polyene has so successfully cured the coating problems on metallic roller cores can be constructed of steel, copper, aluminum, etc. The roller core can be a hollow cylinder, a solid cylinder, a porous sintered cylinder, a porous polymeric structure, e.g., a filament wound spindle, etc.

The method of applying the photocurable composition to the roller core (cylinder) is not critical, and can also, typically, be a forced-feed mechanism such as the use of a roller transfer to the core, an extrusion transfer, a curtain coating or knife coating, etc. Also a dip coating or spray coating technique can be used when the photocurable composition is of a relatively low viscosity.

The photocuring means is an actinic radiation source. It can be an ultraviolet light source that is comprised of one or more individual U.V. sources, e.g., a sun lamp, mercury vapor lamp, carbon arc, pulsed xenon arc, etc., several batteries of individual sources, and so forth. Other actinic ratiation sources can be used, e.g., electron beams, gamma rays, lasers, visible or infrared radiation sources, etc., if the coating composition is formulated properly so that satisfactory rates of curing can be attained therewith.

As broadly used in this application, the term "photocurable"includes those curing mechanisms which are initiated by ultraviolet or visible raidation. Further, heat-activated (e.g., infrared monomer or polymer compositions, as well as actinic light-activated compositions, are within the scope of this invention. Combinations of the above forms of radiation also can be used if so desired to obtain special advantages, and as a matter of fact, common U. V. light sources omit visible and infrared simultaneously.

The crucial ingredients in the photocurable composition used in the adhesive layer are:

1. about 2 to about 98 parts by weight of a liquid epoxy, ethylenically unsaturated polyene containing two or more reactive carbon-to-carbon bonds;
2. about 98 to about 2 parts by weight of a polythiol; and
3. about 0.0005 to about **50** parts by weight, based on 100 parts by weight of (1) and (2), of a photocuring rate accelerator.

The reactive carbon-to-carbon bonds of the polyenes are preferably located terminally, near terminally, and/or pendant from the main chain. The polythiols, preferably, contain two or more thiol groups per molecule. The usable photocurable compositions are liquid at over the temperature range encountered during application.

It is to be understood, however, that when energy sources other than visible or ultraviolet light are used to initiate the curing reaction, that photocuring rate accelerators (i.e., photosensitizers, etc.) generally are not required in the formulation. That is to say, the actual composition of the photocuring rate accelerator, if required, may vary with the type of energy source that is used to initiate the curing reaction.

Included in the term "liquid," as used herein, are those photocurable compositions which in the presence of inert solvent, aqueous dispersion or placticizer have a viscosity ranging from essentially zero to 20 million centipoises at 70° F.

As used herein polyenes and polyynes refer to simple or complex species of alkenes or alkynes having a multiplicity, i.e., at least 2, "reactive" carbon-to-carbon unsaturated functional groups per average molecule. For example, a diene is a polyene that has two "reactive" carbon-to-carbon double bonds per average molecule, while a diyne is a polyyne that contains in its structure two "reactive" carbon-to-carbon triple bonds per average molecule. Combinations of "reactive" double bonds and "reactive" triple bonds within the same molecule are also operable. An example of this is monovinylacetylene, which is a polyeneyne under our definition. For purposes of brevity all these classes of compounds will be referred to herein as polyenes.

As used herein the term "reactive" unsaturated carbon-to-carbon groups means groups which will react under proper conditions as set forth herein with thiol groups to yield the thioether linkage

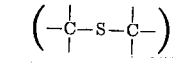

as contrasted to the term "unreactive" carbon-to-carbon unsaturation which means

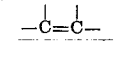

groups found in aromatic nuclei (cyclic structures exemplified by benzene, pyridine, anthracene, and the like), that do not react under the same conditions with thiols to give thioether linkages. In the instant invention, products from the reaction of polyenes with with polythiols which contain two or more thiol groups per average molecule are called polythioether polymers or polythioethers.

The photocurable compositions used in the adhesive layer contain liquid epoxy polyene compositions having a -ene or -yne functionality of at least two and having a viscosity in the range of 0 to 20 million centipoises at 130° C and a molecular weight ranging from about **150** to **20,000** or more are formed by reacting either

a. an organic epoxide containing at least two

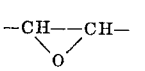

groups in its structure with a member of the group consisting of hydrazine, primary amines, secondary amines, tertiary amine salts, organic alcohols and organic acids wherein said group members contain at least one organic substituent containing a reactive ethylenically or ethynically unsaturated group, or

b. an organic epoxide containing at least one organic substituent containing a reactive ethylenically or ethynically unsaturated group with a member of the group consisting of hydrazine and an organic material containing at least two active hydrogen functions from the group consisting of

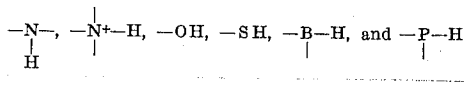

The epoxy polyenes are used in combination with polythiols to form the photocured layer on the rollers.

The key chemical entity in the epoxy polyenes is the oxirane group, namely,

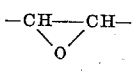

Liquid epoxy polyene compositions having a multiplicity of -ene or -yne functionality are prepared by the reaction of oxirane groups with ring-opening active hydrogen-containing species. The polyenes can be attained by two routes:

a. a di- or polyfunctional epoxy compound is reacted with an unsaturated active-hydrogen containing material and

b. di- or polyfunctional active hydrogen-containing compound is reacted with an unsaturated epoxy material.

In one of its simplest forms these two routes (a) and (b) can be exemplified by but are not limited by the following equations:

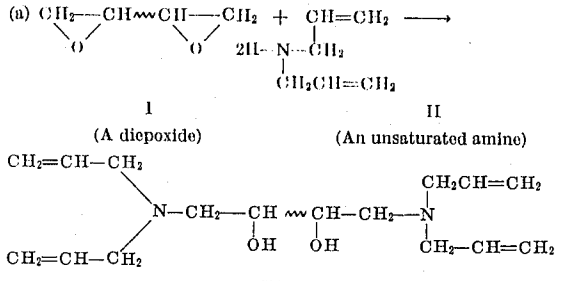

I (A diepoxide) II (An unsaturated amine)

III (A polyene)

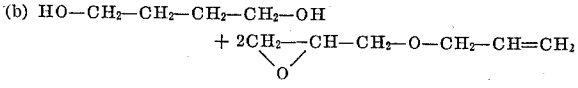

IV (A diol) V (An unsaturated epoxide)

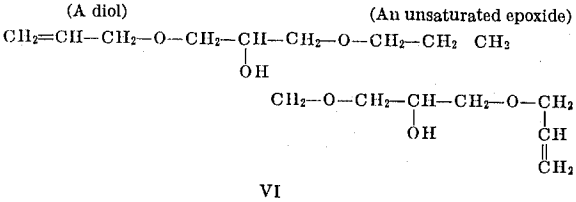

VI (A polyene)

In the above equations the reactants may be of virtually any molecular weight (i.e., both monomeric or polymeric species). Further, the reactants may vary individually in functionality over quite a wide range, the only restriction being that the final- -ene or -yne functionality of the product polyene (or polyyne) must be at least two.

Several additional examples of the epoxy containing derivatives which are analogs of compounds I and II, above, are shown in Chapter 2,3 and 4 and their appendices in *Handbook of Epoxy Resins*, by Henry Lee and Kris Neville, McGraw-Hill Book Co., 1967; pages 2–1 to 2–33 and are incorporated herein by reference. These obviously do not limit the scope of this invention as many additional structures are also possible.

Several additional examples (also not limiting in scope) of active hydrogen groupings capable of reaction with the oxirane group in a ring opening fashion as described above (of compounds II and IV, for example) can be found in the *Handbook of Epoxy Resins*, ibid, Chapter 5, especially Appendix 5–1 (pages 5–32 to 5–40, inclusive) and are incorporated herein by reference.

The crucial ingredients in the preferred photocurable composition used in the roller layer are:

1. about 2 to about 98 parts by weight of an ethylenically unsaturated polyene (or polyyne) containing two or more reactive unsaturated carbon-to-carbon bonds;
2. about 98 to about 2 parts by weight of a polythiol; and
3. about 0.0005 to about 50 parts by weight (based on 100 parts by weight of (1) and (2)) of a photocuring rate accelerator.

The usable photocurable compositions are liquid over the temperature encountered during application.

It is to be understood, however, that when energy sources other than visible or ultraviolet light are used to initiate the curing reaction, that photocuring rate accelerators (i.e., photosensitizers, etc.) generally are not required in the formulation. That is to say, the actual composition of the photocuring rate accelerator, if required may vary with the type of energy source that is used to initiate the curing reaction.

The broad terms polyenes and polyynes as used in the roller layer compositions are defined as defined under the adhesion layer compositions, although the latter must contain epoxide groups.

Methods of preparing various polyenes useful within the scope of this invention are disclosed in copending application have Ser. No. 674,773, filed Oct. 12, 1967, now abandoned, and assigned to the same assignee. Some of the useful polyenes are prepared in the detailed examples, set forth in the following specification. The general formulas for representative polyenes and polyynes are given in the Figures in Dutch Holland application No. 6,710,349, which was laid open to public inspection and copying thereof on Jan. 29, 1968 (said pertinent portions of said public document being incorporated herein by reference).

One group of polyenes operable in the instant invention is that taught in a copending application having Ser. No. 617,801; inventors: Kehr and Wszolek; filed; Feb. 23, 1967, now abandoned; and assigned to the same assignee. This group includes those having a molecular weight in the range of 50 to 20,000, a viscosity ranging from 0 to 20 million centipoises at 70°C., and of the general formula: $[A] - (X)_m$, wherein X is a member of the group consisting of

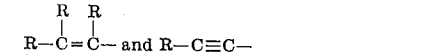

m is at least 2; R is independently selected from the group consisting of hydrogen, halogen, and an organic compound selected from the group consisting of aryl, substituted aryl, aralkyl, substituted aralkyl, cycloalkyl, substituted cycloalkyl, alkyl, and substituted alkyl groups containing one to four carbon atoms; and A is a polyvalent organic moiety free of (1) reactive carbon-to-carbon unsaturation and (2) unsaturated groups in conjugation with the reactive ene or yne groups in X. Thus A may contain cyclic groupings and minor amounts of hetero atoms such as N, S, P or O but containing primarily carbon-carbon, carbon-oxygen or silicon-oxygen containing chain linkages without any reactive carbon-to-carbon unsaturation. This group preferably has a molecular weight over 300.

In this first group, the polyenes are simple or complex species of alkenes or alkynes having a multiplicity of pendant, terminally or near terminally positioned "reactive" carbon-to-carbon unsaturated functional groups per average molecule. As used herein for determining the position of the reactive

functional carbon-to-carbon unsaturation, the term "terminal" means that said functional unsturation is at an end of the main chain in the molecule; whereas the term "near terminal" means that the functional unsaturation is not more than four carbon atoms away from an end of the main chain in the molecule. The term "pendant" means that the reactive carbon-to-carbon unsaturation is located terminally in a branch of the main chain as contrasted to a position at or near the ends of the main chain. For purposes of brevity all of these positions will be referred to generally as "terminal" unsturation.

The liquid polyenes operable in this first group contain one or more of the following types of non-aromatic and non-conjugated "reactive" carbon-to-carbon unsaturation:

(1) $-CH=CH-$ (5) $-\overset{|}{C}=\overset{|}{C}-$

(2) $-C\equiv C-$ (6) $-\overset{|}{C}=CH-$

(3) $-CH=CH_2$ (7) $-CH=\overset{|}{C}-$

(4) $-C\equiv CH$ (8) $-\underset{|}{C}=CH_2$

These functional groups as shown in 1–8 supra are situated in a position either which is pendant, terminal or near terminal with respect to the main chain but are free of terminal conjugation. As used herein the phrase "free of terminal conjugation" means that the terminal "reactive" unsaturated groupings may not be linked directly to non-reactive unsaturated species such as

$$-\overset{O}{\overset{\|}{C}}-,\ -\overset{O}{\overset{\|}{\underset{O}{\underset{\|}{S}}}}-,\ -\overset{O}{\overset{\|}{\underset{|}{P}}}-$$

and the like so as to form a conjugated system of unsaturated bonds exemplified by the structure

$$R-\overset{R}{\overset{|}{C}}=\overset{R}{\overset{|}{C}}-\overset{O}{\overset{\|}{C}}-,\ \text{etc.}$$

On the average the polyenes must contain **2** or more "reactive" unsaturated carbon-to-carbon bonds per molecule and have a viscosity in the range from slightly above 0 to about 20 million centipoises at 70° C. Included in the "polyenes" as used herein are those materials which in the presence of an inert solvent, aqueous dispersion or plasticizer fall within the viscosity range set out above at 70° C. Operable polyenes in the instant invention have molecular weights in the range of about 50 to about 20,000, preferably about 500 to about 10,000.

Examples of operable polyenes from this first group include, but are not limited to:

1. Crotyl-terminated polyurethanes which contain two "reactive" double bonds per average molecule in a near terminal position of the average general formula:

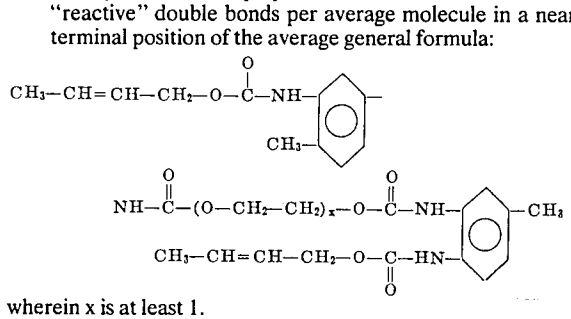

wherein x is at least 1.

2. Ethylene/propylene/non-conjugated diene terpolymers, such as Nordel 1040 manufactured by E.I. duPont de Nemours & Co., Inc., which contains pendant terminal "reactive" double bonds:

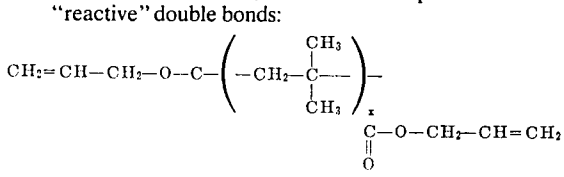

wherein x is at least 1.

4. the following structure which contains near terminal "reactive" double bonds:

$$CH_3(CH_2)_7-CH=CH-(CH_2)_7-\overset{O}{\overset{\|}{C}}-(CO_3H_6)_x-O-\overset{O}{\overset{\|}{C}}-(CH_2)_7-CH=CH-(CH_2)_7CH_3$$

wherein x is at least 1.

A second group of polyenes operable in this invention includes those polyenes in which the reactive unsaturated carbon-to-carbon bonds are conjugated with adjacent unsaturated groupings. Examples of operable conjugated reactive ene systems include but are not limited to the following:

$$-\underset{|}{C}=\underset{|}{C}-\underset{O}{\underset{\|}{C}}-,\ -\underset{|}{C}=\underset{|}{C}-\overset{O}{\overset{\|}{\underset{O}{\underset{\|}{S}}}}-,\ \text{and}\ -\underset{|}{C}=\underset{|}{C}-\overset{O}{\overset{\|}{\underset{|}{P}}}-$$

A few typical examples of polymeric polyenes which contain conjugated reactive double bond groupings such as those described above are poly(oxyethylene) glycol (600 M.W.) acrylate; poly(oxytetramethylene) glycol (1,000 M.W.) dimethacrylate; the triacrylate of the reaction product of trimethylol propane with 20 moles of ethylene oxide; and the like.

As used herein, the term polythiols refers to simple or complex organic compounds having a multiplicity of pendant or terminally positioned —SH functional groups per average molecule.

On the average, the polythiols must contain two or more —SH groups per molecule. They usually have a viscosity range of slightly above 0 to about 20 million centipoises (cps) at 70° C. as measured by a Brookfield Viscometer. Included in the term "polythiols" as used herein are those materials which, in the presence of an inert solvent, aqueous dispersion or plasticizer fall within the viscosity range set out above at 70° C. Operable polythiols in the instant invention usually have molecular weights in the range of about 50 to about 20,000 or more, preferably about 100 to about 10,000.

The polythiols operable in the instant invention can be exemplified by the general formula: $R_a-(SH)_n$, wherein n is at least **2** and R_a is a polyvalent organic moiety free from "reactive" carbon-to-carbon unsaturation. Thus, R_a may contain cyclic groupings and minor amounts of hetero atoms such as N, S, P or O, but primarily contains carbon-hydrogen, carbon-oxygen, or silicon-oxygen containing chain linkages free of any "reactive" carbon-to-carbon unsaturation.

One class of polythiols operable with polyenes in the instant invention to obtain essentially odorless compositions are esters of thiol-containing acids of the general formula: $HS-R_b-COOH$, wherein R_b is an organic moiety containing no "reactive" carbon-to-carbon unsaturation with polyhydroxy compound of the general structure: $R_c-(OH)_n$, wherein R_c is an organic moiety containing no "reactive" carbon-to-carbon unsaturation with polyhydroxy compounds of the general structure: $R_c-(OH)_n$, wherein R_c is an organic moiety containing no "reactive" carbon-to-carbon unsaturation and n is 2 or greater. These components will react under suitable conditions to give a polythiol having the general structure:

$$R_c-(O\overset{O}{\overset{\|}{C}}-R_b-SH)_n$$

wherein R_b and R_c are organic moieties containing no "reactive" carbon-to-carbon unsaturation and n is 2 or greater.

Certain polythiols, such as the aliphatic monomeric polythiols (ethane dithiols, hexamethylene dithiol, decamethylene dithiol, tolylene-2,4-dithiol, etc.), some polymeric polythiols, such as a thiol-terminated ethyl-

cyclohexyl dimercaptan polymer, etc., and similar polythiols which are conveniently and ordinarily synthesized on a commercial basis, although having obnoxious odors, are operable in this invention. Examples of the polythiol compounds preferred for this invention because of their relatively low odor level and fast curing rate include, but are not limited to, esters of thioglycolic acid (HS—CH_2COOH), α-mercaptopropionic acid (HS—CH(CH_3)COOH) and β-mercaptopropionic acid (HS—CH_2CH_2COOH) with polyhydroxy compounds such as glycols, triols, tetraols, pentaols, hexaols, etc. Specific examples of the preferred polythiols include but are not limited to ethylene glycol bis(thioglycolate), ethylene glycol bis(β-mercaptopropionate), trimethylopropane tris(thioglycolate), trimethylolpropane tris (β-mercaptopropionate), pentaerythritol tetrakis(thioglycolate) and pentaerythritol tetrakis (β-mercaptopropionate), all of which are commercially available. A specific example of a preferred polymeric polythiol is poly(propylene ether) glycol bis(β-mercaptopropionate) which is prepared from poly(propylene ether) glycol (e.g., Puracol P2010, Wyandotte Chemical Corp.) and β-mercaptopropionic acid by esterification.

The preferred polythiol compounds are characterized by a low level of mercaptan-like odor initially, and after reaction give essentially odorless cured polythioether end products which are commercially useful resins or elastomers for printing plates.

As used herein the term "odorless" means the substantial absence of the well-known offensive and sometimes obnoxious odors that are characteristic of hydrogen sulfide and the derivative family of compounds known as mercaptans.

The term "functionality" as used herein refers to the polyene and/or the polythiol. For example, a triene is a polyene with an average of three "reactive" carbon-to-carbon unsaturated groups per molecule and thus has a functionality of 3. A dithiol is a polythiol with an average of two thiol groups per molecule and thus has a functionality of 2.

It is further understood and implied in the above definitions that in these systems the functionality of the polyene and the polythiol component is commonly expressed in whole numbers although in practice the actual functionality may be fractional. For example, a polyene component having a nominal functionality of 2 (from theoretical considerations alone) may in fact have an effective functionality of somewhat less than 2. Such a product is useful in the instant invention and is referred to herein as having a functionality of 2.

To obtain the best roller and adhesive layer, the reaction components consisting of the polyenes and polythiols of this invention generally are formulated in such a manner as to give solid, cross-linked, three-dimensional network polythioether polymer systems on curing. In order to achieve such infinite network formation, the individual polyenes and polythiols must each have a functionality of at least 2 and the sum of the functionalities of the polyene and polythiol components must always be greater than 4. Blends and mixture of the polyenes and the polythiols containing such functionality are also operable herein.

The preferred photocuring reaction can be initiated by U.V. radiation contained in actinic radiation from sunlight or obtained from special light sources which emit significant amounts of U.V. light. (Useful U.V. radiation generally has a wavelength in the range of about 2,000 to about 4,000 angstrom units .) Thus it is possible merely to expose the polyene and polythiol admixture to actinic radiation under ambient conditions or otherwise and obtain a cured solid elastomeric or resinous product useful as a coating material. But this approach to the problem results in extremely long exposure times which cause the process in the vast bulk of applications to be commercially unfeasible. Chemical photocuring rate accelerators (photo-initiators, -sensitizers or -activators) serve to drastically reduce the exposure time and thereby when used in conjunction with various forms of energetic radiation (containing U.V. radiation) yield very rapid, practical photocures by the practice of the instant invention. Useful photocuring rate accelerators include benzophenone; acetophenone; acenaphthene-quinone; methyl ethyl ketone; thioxanthen-9-one; xanthen-9-one; 7-H-Benz [de] anthracen-7-one; dibenzosuberone; 1-naphthaldehyde; 4,4'-bis(dimethylamino) benzophenone; fluorene-9-one; 1'-acetonaphthone; 2'-acetonaphthone; 2,3-butanedione; anthraquinone; 1-indanone; 2-tert-butyl anthraquinone; valerophenone; hexanophenone; 8-phenylbutyrophenone; p-morpholinopropiophenone; 4-morpholinobenzophenone; 4'-morpholinodesoxybenzoin; p-diacetylbenzene; 4-aminobenzophenone; 4'-methoxyacetophenone; benzaldehyde; α-tetralone; 9-acetylphenanthrene; 2-acetylphenanthrene; 10-thioxanthenone; 3-acetylphenanthrene; 3-acetylindole; 1,3,5-triacetylbenzene; etc., and blends thereof. The photoinitiators are added in an amount ranging from about 0.0005 to about 50 percent by weight of the polyene and polythiol components in the instant invention. Benzophenone is the preferred photocuring rate accelerator.

The compositions to be photocured, in accord with the present invention, may, if desired, include such additives as antioxidants, inhibitors, activators, fillers, antistatic agents, flame-retardant agents, thickeners, thixotropic agents, surface-active agents, viscosity modifiers, plasticizers, and the like, within the scope of this invention. Such additives are preblended with the polyene or polythiol prior to placing the final composition. The aforesaid additives may be present in quantities up to 500 parts or more per 100 parts photocurable compositions by weight and preferably 0.0005 and 300 parts on the same basis. The type and concentration of the additives must be selected with great care so that the final composition remains photocurable under conditions of exposure encountered.

The compounding of the components prior to photocuring can be carried out in any conventional manner which takes into account that the material is sensitive to U. V. radiation. This composition generally can be stored in the dark for extended periods of time.

The photocurable composition should be a viscous liquid at room temperature. The viscosity should range between about 50 and about 200,000 poises in the temperature range of 0° to 70° C. The term liquid includes suspensions, etc. (The viscosity of the polyenes and polythiols was measured on a Brookfield Viscometer at 30° C., and 70° C. in accord with the instructions therefor.)

The following examples will aid in explaining, but should not be deemed as limiting, the instant invention. In all cases, unless otherwise noted, all parts and percentages are by weight.

EXAMPLE 1

One mole diglycidyl ether of Bisphenol A having a molecular weight in the range 370–384 and being commercially available from Shell Chemical Co. under the trade name Epon 828 and 2 moles of allyl hydrazine were dissolved in 500 ml. benzene in a beaker at room temperature (25° C.). The reaction was continued with stirring for 18 hours during which time the exotherm and reaction temperature was maintained below 80° C. The benzene solvent was removed by vacuum. The resultant liquid polyene was termed polyene A.

EXAMPLE 2

Example 1 was repeated except that 2 moles of allyl amine was substituted for the 2 moles of allyl hydrazine. The resultant liquid polyene was termed polyene B.

EXAMPLE 3

Example 1 was repeated except that 2 moles of diallyl amine was substituted for the 2 moles of allyl hydrazine in Example 1. In this instance no solvent was used in the synthesis reaction. The resultant liquid polyene was termed polyene C.

EXAMPLE 4

Example 1 was repeated except that 2 moles of N,N-dimethyl- N-allyl amine hydro-p-toluenesulfonate was substituted for the 2 moles of allyl hydrazine in Example 1. The resultant liquid polyene was termed polyene D.

EXAMPLE 5

Example 3 was repeated except that 2 moles of allyl alcohol was substituted for the 2 moles of diallyl amine in Example 3. The resultant liquid polyene was termed polyene E.

EXAMPLE 6

Example 3 was repeated except that 2 moles of allyl acetic acid was substituted for the 2 moles of diallyl amine. The resultant liquid polyene was termed polyene F.

EXAMPLE 7

Two moles of allyl glycidyl ether was added dropwise with stirring to 1 mole of hydrazine contained in a beaker containing 200 ml. tetrahydrofuran solvent and thereafter was stirred therein for 18 hours. The temperature was maintained below 80° C. during the reaction. The solvent was vacuum stripped off. The resultant liquid polyene was termed polyene G.

EXAMPLE 8

Example 7 was repeated except that 1 mole of N,N,N',N'-tetramethylethylene diamine dihydro-p-toluenesulfonate was substituted for the hydrazine. The resultant polyene was termed polyene H.

EXAMPLE 9

3456.3 g. (1.75 mole) of poly(propyleneether) glycol, commercially available under the trade name PPG 2055 from Union Carbide, and 1.7 g. of di-n-butyl tin dilaurate were placed in a 5-liter, round-bottom, 3-neck flask. The mixture in the flask was degassed at 110° C. for 1 hour and was then cooled to 25° C. by means of an external water bath. 207 g. (3.50 moles) of allyl alcohol, with stirring, were added to the flask. 609.0 g. (3.50 moles) of an 80 to 20 percent isomer mixture of tolylene-2,4-diisocyanate and tolyene-2,6-diisocyanate, respectively, sold under the trade name Mondur TD 80, was charged to the flask. The mixture was stirred well. The flask was cooled by the water bath during this period. Eight minutes after the Mondur TD 80 was added, the temperature of the mixture was 59° C. After 20 minutes, the NCO content was 12.39 mg. NCO/g.; after 45 minutes, it was 9.87 mg. NCO/g.; and after 75 minutes, it was 6.72 mg.NCO/g. The water bath was removed 80 minutes after the Mondur TD 80 had been added, the temperature of the mixture being 41° C., and heat was applied until the mixture temperature reached 60° C. That temperature was maintained. One hundred and five minutes after the Mondur TD 80 was added, the NCO content was 3.58 mg. NCO/g.; after 135 minutes, it was 1.13 mg. NCO/g.; and after 195 minutes, it was 0.42 mg. NCO/g. At that point in time, the resultant polymer composition was heated to 70° C., and vacuum-stripped for one hour. The resultant polymer composition was labeled composition 1, and had a viscosity of 16,000 cps. as measured on a Brookfield Viscometer at 30° C. Unless otherwise stated, all the viscosity measurements were made on a Brookfield Viscometer at 30° C.

The above procedure was repeated five times, and resultant compositions were labeled compositions 2 to 6, respectively. The heating step lasted 180 minutes, 140 minutes, 140 minutes, 205 minutes and 180 minutes, respectively. With composition 2, the temperature was 60° C. after 8 minutes; with composition 3, the temperature was 57° C. after 6 minutes; with composition 4, the temperature was 41° C. after 20 minutes, at which time the temperature was raised and held at 60° C.; with composition 5, the temperature was 57.5° C. in 8 minutes, was 42° C. in 40 minutes, then taken up to 60° C. and lowered to 58° C. after 120 minutes; and with composition 6, the temperature was 57° C. in 6 minutes, and was 41° C. after 60 minutes, at which time the temperature was immediately raised to 60° C. The viscosity of the resultant polymer compositions was 15,500 cps.; 16,000 cps.; 17,000 cps.; 16,800 cps.; and 16,200 cps., respectively.

Compositions 1,2,3,4,5, and 6 were placed in a 6-gallon container and stirred well. The resultant polymer composition had a viscosity of 16,600 cps. and the NCO content was 0.01 mg. NCO/g. This composite polymer composition was labeled polyene I, which has the following approximate structure:

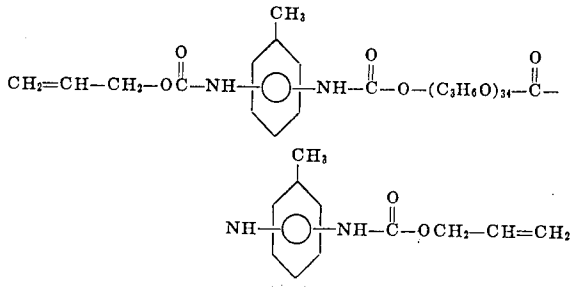

EXAMPLE 10

Polyene J was prepared as follows: 1,500 g. (0.47 mole) of a linear solid polyester diol having a molecular weight of 3,200 and commercially available from Hooker Chemical Corp. under the trade name Rucoflex S–1011–35 was charged to a 3-liter, 3-necked flask, and heated to 110° C. under vacuum and nitrogen for 1 hour with stirring. 83 g. of allyl isocyanate having a molecular weight of 83.1 and commercially available from Upjohn Co. was added to the flask along with 0.3 cc. of dibutyl tin dilaurate (catalyst), commercially available from J.T. Baker. The reaction was continued at 110° C. with stirring for 1 hour. This allyl-terminated liquid polymer was labeled polyene J.

EXAMPLE 11

Polyene K was prepared as follows: 485 g. (0.23 mole) of a commercially available liquid polymeric diisocyanate, sold under the trade name Adiprene L–100 by E.I. duPont de Nemours & Co., was charged to a dry resin kettle maintained under a nitrogen atmosphere and equipped with a condenser, stirrer, thermometer, and gas inlet and outlet. 37.8 g. (0.65 mole) of allyl alcohol was charged to the kettle and the reaction was continued for 17 hours with stirring at 100° C. Thereafter the nitrogen atmosphere was removed and the kettle was evacuated 8 hours at 100° C. 50 cc. of dry benzene was added to the kettle and the reaction product was azeotroped with benzene to remove the excess unreacted alcohol. This allyl-terminated liquid polymer has a molecular weight of approximately 2,100 and was labeled polyene K.

EXAMPLE 12

Three steel strips were sand blasted, wiped off and coated with photocurable composition A, which contained 100 parts of polyene C, 55 parts of Q–43 Ester and 0.5 parts of benzophenone. Q–43 Ester is the trade designation for pentaerythritol tetrakis (β-mercapto-propionate) which is commercially available from Carlisle Chemical Company. The strips were irradiated with ultraviolet light from one Westinghouse RS 275 watt sunlamp at a distance of 3 inches for 10 minutes. The photocured polymer was glass-like in appearance, and stuck well to the metallic surfaces.

EXAMPLE 13

Example 12 was repeated, except that polyene I was used in place of polyene C in photocurable composition A, and the

amount of Q-43 was reduced to 10 parts per 100 parts of Polyene C. The new photocurable composition was labeled photocurable composition B. The composition was photocured for 5 minutes. The photocured polymer only lightly stuck to the metallic surfaces.

EXAMPLE 14

Photocurable composition A was coated on a sand blasted steel strip (the layer was 2 mils thick). Photocurable composition B was then coated lightly on the coating of photocurable composition A (the layer was 20 mils thick). The doubly coated steel strip was then irradiated with U. V. light from one RS sunlamp at a distance of 3 inches for 10 minutes. The photocured coating had excellent adhesion to the steel strip, and the two photocured layers could not be separated.

EXAMPLE 15

Example 12 was repeated, except after the first layer was photocured, a second layer of photocurable composition A was applied and similarly photocured. The photocured coating stuck to the metallic surface.

EXAMPLE 16

Example 15 was repeated, except that the first and second layer was prepared using photocurable composition B. The photocured coating only lightly stuck to the metallic surface.

EXAMPLE 17

Example 15 was repeated, except that the second layer was prepared using photocurable composition B. The photocured coating stuck to the metallic surface.

EXAMPLE 18

Example 14 was repeated, except that photocurable composition A was diluted with 155.5 parts of toluene. The photocured coating had excellent adhesion to the steel strip, and the two photocured layers could not be separated.

EXAMPLE 19

Example 14 was repeated, except that photocurable compositions A and B were stored for two hours before being coated and photocured. The storage was in air, but in the absence of U. V. light. The photocured coating had excellent adhesion to the steel strip, and the two photocured layers could not be separated.

EXAMPLE 20

An amount of photocurable composition A was placed in a reservoir like **8** shown in FIG. **1**. An amount of photocurable composition A was placed in a reservoir like **36** shown in FIG. **1**. The rest of the experimental set up was similar to that shown in FIG. **1**, and the accompanying write-up thereof above. The end of delivery tray **16** was placed about 10 mils away from steel roller core **4**. Roller core **4** (diameter = 1 inch) was rotated at 25 r.p.m. Valve **56** on the throat of reservoir **8** was opened. As the coating was applied to roller core **4** delivery tray **16** was slowly moved (manually) away from the core. A rolling bank similar to **52** was maintained. When the coating thickness reached about 0.010 inch, delivery tray **56** was completely backed away from the coated roller (after the flow of composition A had been stopped by turning off valve **56**. The end of delivery tray **44** was placed about **20** mils away from rotating coated core **4**. Valve **64** was turned on. As photocurable composition B was applied to rotating coated core **4**, delivery tray **44** was slowly moved away from the core. A rolling bank similar to **60** was maintained. After two rotations of core **4**, ultraviolet light source **24** was turned on (outer coating thickness was less than 0.010 inch). The application continued, with the U. V. light source on, until the outer coating thickness was 0.525 inch. Delivery tray **44** was completely backed away from the coated roller (after the flow of composition B had been stopped by turning off valve **64**). The coated roller was further rotated for **3** minutes before the U. V. lamp was turned off. The final hardness of the coating was measured at Shore A 30 (ASTM). The photocured coating had excellent adhesion to the steel core, and the two photocured layers could not be separated.

EXAMPLES 21 to 24

Example 20 was repeated 4 times, except that the pentaerythritol tetrakis (β-mercaptopropionate) in photocurable compositions A and B was replaced with trimethylopropane tris(β-mercaptopropionate) (60.9 parts); trimethylolpropane tris(thioglycolate) (50.10 parts); pentaerythritol tetrakis(thioglycolate) (50.9 parts); and polypropylene ether tetraol tetrakis(β-mercaptopropionate) of approximately 1,000 M.W. (25.5 parts), respectively. The photocured coatings had excellent adhesion to the steel cores, and the photocured layers could not be separated.

EXAMPLE 25

Example 20 was repeated, except that half of the pentaerythritol tetrakis (β-mercaptopropionate) in photocurable composition A was replaced with 22 parts of ethylene glygol bis(β-mercaptopropionate). The photocured coating had excellent adhesion to the steel core, and the two photocured layers could not be separated.

EXAMPLES 26 to 31

Example 20 was repeated 6 times, except that the benzophenone was replaced with cyclohexanone (0.5 part); acetone (1 part); methyl ethyl ketone (3.0 part); dibenzosuberone (2 parts); a blend of acetone (0.3 part) and p-diacetylbenzene (0.6 part); and 3-acetylphenanthrene (1 part), respectively. The photocured coatings had excellent adhesion to the steel cores, and the photocured layers could not be separated.

EXAMPLES 32 to 37

Example 20 was repeated 6 times, except that polyene C in photocurable composition A was replaced with polyene B (100 parts); polyene A (70 parts); polyene D (150 parts); polyene F (110 parts); polyene G (100 parts); and polyene H (160 parts); respectively. The photocured coatings had excellent adhesion to the steel cores, and the photocured layers could not be separated.

EXAMPLES 38 to 39

Example 20 was repeated twice, except that polyene I in photocurable composition B was replaced with polyene J (80 parts) and polyene K (150 parts), respectively. The photocured coatings had excellent adhesion to the steel cores, and the photocured layers could not be separated.

EXAMPLE 40

This example illustrates the use of a monomeric polythiol and a monomeric polyene in the outer layer. 23.8 parts of pentaerythritol tetrakis (β-mercaptopropionate); 18.0 parts of the reaction product of one mole of 1,4-butanediol with two moles of allyl isocyanate; 7 parts of Hi—Sil 233; and 0.5 parts of benzophenone were thoroughly admixed. (Hi—Sil 233 is the trade name for finely divided silica filler having a particle size of 0.3 microns and is commercially available from PPG Industries, Inc.). Example 21 was repeated, except that the above photocurable composition was used in place of photocurable composition B. The photocured coating had excellent adhesion to the steel core, and the two photocured layers could not be separated.

EXAMPLE 42

The photocurable compositions of Example 20 were coated on a steel core, as stated in Example 20. Curing was accomplished by passing the coated core under an electron beam from a Van de Graaff accelerator until a total irradiation dosage of 2 megarads was absorbed. The photocured coating had excellent adhesion to the steel, and the two photocured layers could not be separated.

EXAMPLE 43

The photocurable compositions of Example 20 were coated on a steel core as stated in Example 20. The coated core was cured in a 48 hour period by gamma radiation from a cobalt 60 source for an absorbed dosage of 2 megarads. The photocured coating had excellent adhesion to the steel core, and the two photocured layers could not be separated.

EXAMPLE 44

This example illustrates the use of a photocurable composition containing a monomeric polyene and a polymeric polythiol in the outer layer 0.5 g. of "Dion Polymercaptan Resin DPM—1002," which is a thiol terminated liquid polymer having a functionality of 2 to 3 and a molecular weight of about 5,000, and is commercially available from Diamond Alkali Company; 2.5 g. of triallyl cyanurate; and 0.5 g. of benzophenone were admixed. Example 20 was repeated, except that the above photocurable composition was used in place of photocurable composition was used in place of photocurable composition B. The photocured coating had excellent adhesion to the steel core, and the two photocured layers could not be separated.

EXAMPLE 45

This example illustrates the use of a photocurable composition containing a polymeric polyene and a polymeric polythiol in the center layer. Example 20 was repeated, except that the photocurable composition contained 5 parts of the polymeric polyene K; 10 parts of the polymeric polythiol used in Example 43; and 0.5 part of benzophenone.

The photocured coating had excellent adhesion to the steel core, and the two photocured layers could not be separated.

EXAMPLE 46

Example 20 was repeated, except that the steel core was tubular-shaped. The photocured coating had excellent adhesion to the hollow steel core, and the two photocured layers could not be separated.

EXAMPLE 47

Example 20 was repeated, except that the steel core was replaced with an aluminum core. The photocured coating had excellent adhesion to the aluminum core, and the two photocured layers could not be separated.

EXAMPLE 48

Example 20 was repeated up to the point where there was only a small amount of photocurable composition B left to be coated. Toluene (solvent) was slowly added to the "rolling bank" of photocurable composition A. The solvent-diluted composition was coated until essentially pure solvent was being coated. At this point, the rest of Example 20 was repeated. The resultant photocured coating had a smooth, uniform, glaze-like finish.

EXAMPLE 49

This example illustrates the use of a reactive ene group conjugated with another double bond grouping (C = O) in the outer layer. Twenty-seven parts of the triacrylates of the reaction product of one mole of trimethylol propane with 20 moles of ethylene oxide; 9 parts of pentaerythritol tetrakis (β-mercaptopropionate); and 0.5 parts of benzophenone were admixed. Example 20 was repeated, except that the above photocurable composition was used in place of photocurable composition A. The photocured coating had excellent adhesion to the steel core, and the two photocured layers could not be separated.

It is claimed:

1. A process for preparing a coated cylindrical core, which comprises more

a. preparing a first photocurable composition containing an epoxy polyene;

b. preparing a second photocurable composition;

c. coating said first photocurable composition on said rotating cylindrical metallic core;

d. coating a portion of said second photocurable composition on said coating of said first photocurable composition on said rotating core in a manner such that the entire surface of said coating of said first photocurable composition is entirely covered by said second photocurable composition

e. photocuring said photocurable composition coatings on said rotating cylindrical core, whereby said photocuring is achieved by subjecting said photocurable compositions to actinic radiation; and

f. coating more of said second photocurable composition on said coatings while said photocuring step is continued at least until said continued coating is completed.

2. A process as described in claim 1, wherein said photocuring is achieved by means of ultraviolet radiation.

3. A process as described in claim 1, wherein said first photocurable composition is comprised of an unreacted mixture of 2 to 98 parts by weight of said epoxy polyene, 98 to 2 parts by weight of a polythiol, and 0.0005 to 50 parts by weight of a photocuring rate accelerator, based on 100 parts by weight of said polythiol.

4. A process as described in claim 3, wherein said epoxy polyene has a molecular weight in the range 150 to 20,000, has a viscosity ranging from 0–20 million centipoises at 130° C. and has an -ene or -yne functionality of at least two formed by:

a. reacting an organic epoxide containing at least two

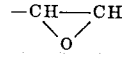

groups in its structure with a member of the group consisting of hydrazine, primary amines, secondary amines, tertiary amine salts, organic alcohols and organic acids, wherein said group member contains at least one organic substituent containing a reactive ethylenically or ethynically unsaturated group, or

b. reacting an organic epoxide containing at least one organic substituent containing a reactive ethylenically or ethynically unsaturated group with a member of the group consisting of hydrazine and an organic material containing at least two active hydrogen functions from the group consisting of

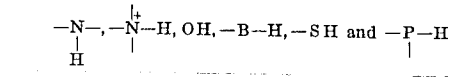

5. A process as described in claim 1 wherein said second photocurable composition comprises an ethylenically or ethynically unsaturated polyene having at least two reactive ene groups per molecule, a polythiol and a photocuring rate accelerator, where the sum of the functionalities of said polyene and said polythiol is greater than four.

6. A process as described in claim 4, wherein said second photocurable composition in said photocurable layer is comprised of 2 to 98 parts by weight of said polyene, 98 to 2 parts by weight of said polythiol, and 0.0005 to 50 parts by weight photocuring rate accelerator based on 100 parts by weight of said polyene and said polythiol.

7. A process as described in claim 6, wherein said polyene composition has a molecular weight in the range of 50 to 50,000; has a viscosity ranging from essentially 0–20,000,000 centipoises at 130° C.; and has a general formula: [A] — $(X)_m$, wherein X is a member of the group consisting of

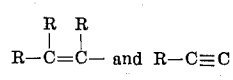

m is an integer of at least two; R is independently selected from the group consisting of hydrogen, halogen, and an organic compound selected from the group consisting of aryl, substituted aryl, aralkyl, substituted aralkyl, cycloalkyl, substituted cycloalkyl, alkyl and substituted alkyl groups containing one to four carbon atoms; and A is a polyvalent polymeric organic moiety free of (1) reactive carbon-to-carbon unsaturation, and (2) unsaturated groupings in terminal conjugation with X.

8. A process as described in claim 6, wherein the polyene has a molecular weight in excess of 300.

9. A process as described in claim 6, wherein the photocurable composition contains 0.0005 to 5.0 parts by weight of an antioxidant, 0.05 to 25 parts by weight of a pigment, 1.0 to 50 parts by weight of a plasticizer, and 0.5 to 100 parts by weight of a filler, each of said ingredients being based upon 100 parts by weight of said polyene and said polythiol.

10. A process as described in claim 9, wherein said antioxidant is 2,6-di-tert-butyl-4-methylphenol.

11. A process as described in claim 6, wherein the two or more reactive ene groups are located at the end of or pendant to the main chain of the molecule.

12. A process as described in claim 6, wherein the said polythiol has a molecular weight between about 50 and about 20,000, and has a viscosity between slightly above zero and about 20,000,000 centipoises at 70° C.

13. A process as described in claim 6, wherein said polyene is prepared from allyl alcohol, polyalkylene ether glycol and tolylene diisocyanate.

14. A process as described in claim 1, wherein said photocured coating is ground and buffed.

15. A process as described in claim 1, wherein said actinic radiation source is an electron beam radiation source which is located above said rotating core and wherein photocurable compositions are coated onto said rotating core from sources which are located below said rotating core.

16. A process as described in claim 1, wherein said cylindrical core is composed of a metal or metallic substance.

17. An article of manufacture consisting of a cylindrical core coated with a first photocurable composition containing an epoxy polyene, said first photocurable composition overcoated with a second photocurable composition, a portion of said second photocurable composition having been applied before said first photocurable composition is completely cured thereby obtaining a monolithic layer on complete curing.

* * * * *