Aug. 11, 1925. 1,549,389

C. SIMON

ALBUM FOR PHOTOGRAPHS

Filed Sept. 26, 1924 2 Sheets-Sheet 1

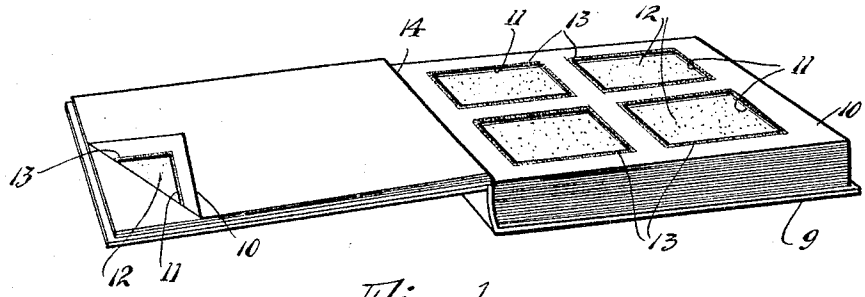

Fig. 1

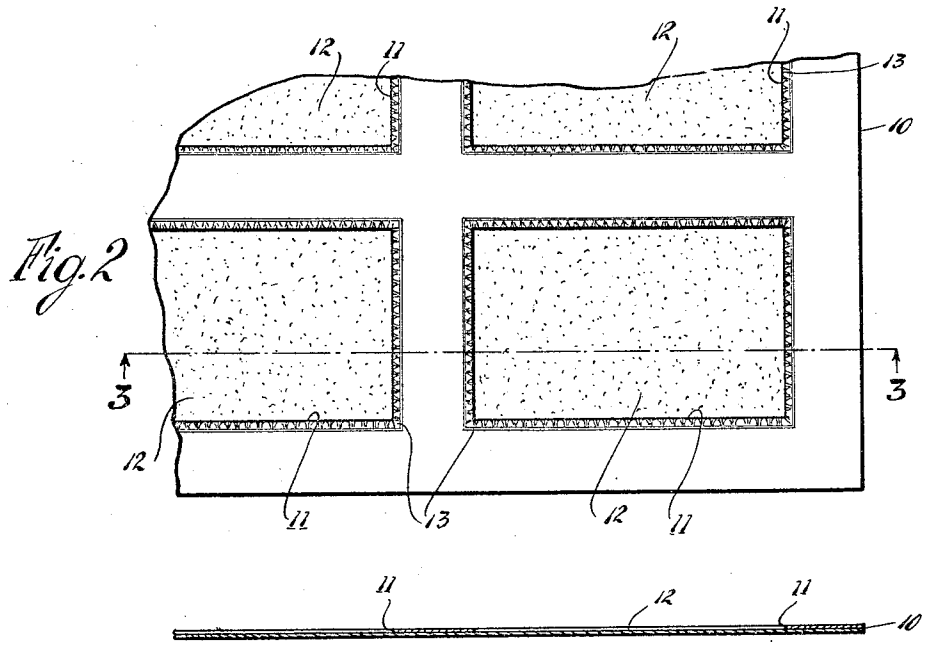

Fig. 2

Fig. 3

Witnesses:
Wm. Smallhardt
J. D. Stuve

Inventor:
Carl Simon
By Joshua R. H. Potts
his Attorney.

Aug. 11, 1925. 1,549,389

C. SIMON

ALBUM FOR PHOTOGRAPHS

Filed Sept. 26. 1924 2 Sheets-Sheet 2

Fig. 7

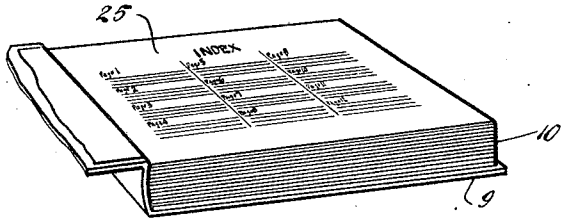

Fig. 4

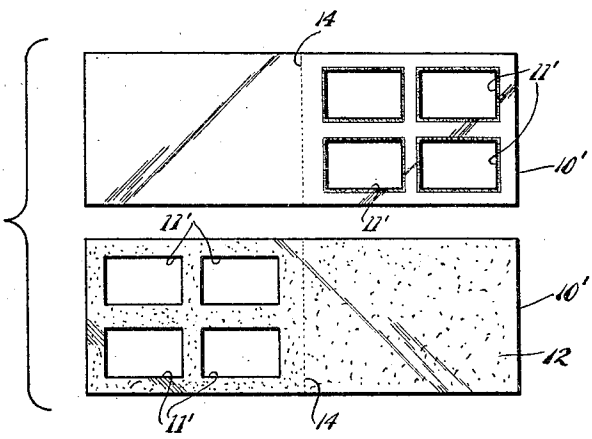

Fig. 5

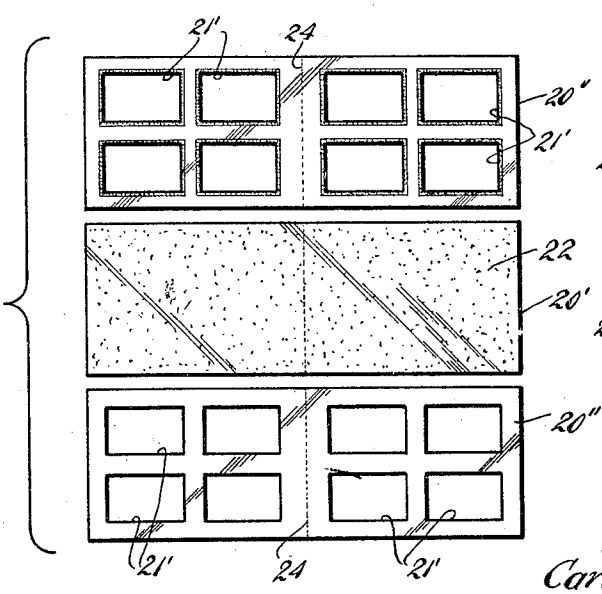



Fig. 6

Witnesses:
[illegible]
J. D. Stuwe

Inventor:
Carl Simon
By Joshua R. H. Potts
His Attorney.

Patented Aug. 11, 1925. 1,549,389

UNITED STATES PATENT OFFICE.

CARL SIMON, OF CHICAGO, ILLINOIS.

ALBUM FOR PHOTOGRAPHS.

Application filed September 26, 1924. Serial No. 739,970.

To all whom it may concern:

Be it known that I, CARL SIMON, a citizen of the United States, and a resident of the city of Chicago, county of Cook, and State of Illinois, have invented certain new and useful Improvements in Albums for Photographs, of which the following is a specification.

My invention relates to photograph albums and the method of making the same, and has for its object to provide a novel and especially useful album with depressions or inset spaces for holding photographs, and especially unmounted photographs, to be set in said depressions and firmly mounted therein, as with adhesive material; and another object is to provide a new method of conveniently making such an album, and more particularly for making the sheets of such an album.

Other objects will appear hereinafter.

The invention consists in the combinations and arrangements of parts hereinafter described and claimed.

The invention will be best understood by reference to the accompanying drawings forming a part of this specification, and in which,

Fig. 1 is a perspective view of the preferred form of my invention, with depressions only on the forward side of each sheet for receiving photographs;

Fig. 2 is an enlarged fragmentary view of one of my improved sheets.

Fig. 3 is a cross sectional view taken on line 3—3 of Fig. 2;

Fig. 4 shows a pair of like sheets or members which are fastened together to form a compound sheet, the face or outer side of the sheet being shown in the upper part of said figure and the back or inner side of the companion sheet being shown in the lower part of said figure.

Fig. 5 shows the sheets or members for making a modified form of compound sheet provided with depressions arranged in both faces of the finished compound sheet.

Fig. 6 is a cross sectional view of this modified form; and

Fig. 7 is a view of the index means provided in my improved album.

The preferred form of my invention illustrated in Figs. 1 to 4, inclusive, comprises an album containing covering means 9 with compound sheets 10 mounted therein which are provided with hollowed out portions or depressions 11 on the forward side, said depressions being of proper size or of various sizes to receive the usual size photographs within their confines and to snugly fit and embrace said photographs in said depressions, suitable adhesive material 12 being provided in the bottom of said depressions to be moistened for fastening the photographs in position; ornamentation 13 being preferably also provided around said depressions, as by printing or indenting, or the like. These compound sheets are preferably also in the form of multiple sheets and extend entirely across the two sides of the album to form two complete sheets thereof, each sheet having a front page with depressions and a smooth level rear page, and these compound sheets are folded and fastened in the album across the middle line 14, (see Figs. 1 and 4); but if desired, the sheets may also be made so that each compound or built-up sheet forms a single sheet of the album, including a front page with depressions and a smooth rear page, and which pages are suitably bound with their inward edges in the middle of the album in any approved manner.

The method of making the preferred form, illustrated in Figs. 1 to 4, comprises the taking of suitable sheets 10′ of equal size and therein providing, adjacent one end of each sheet and substantially in half of each, one or more suitable openings 11′ to fit the usual size photographs, also placing suitable ornamentations 13 around said openings on the face side of each sheet, if same is desired; then placing suitable adhesive material 12, preferably composed of gum arabic and dextrine, entirely across the back of each sheet; and next fastening the backs together, by suitable pressure and said adhesive material, in such a manner that the openings of one sheet come against the closed or solid part of the other or companion sheet, thus forming the compound sheet with the photograph receiving depressions 11 therein as shown in Figs. 1 to 3. These sheets 10′ are of a suitable thickness and therefore the depressions 11 are of a suitable depth so that the outer face of the photographs mounted in said depressions are substantially flush or even with the

outer face of said sheets 10′. These compound sheets 10 are preferably mounted in suitable covers 9, as by binding them therein at the middle lines 14, or by removably mounting the same in any well known manner of loose-leaf binding.

The modified form shown in Figs. 5 and 6, includes compound sheets, each of which forms two sheets of the album, which are fastened in suitable covers at the middle line 24, in a manner similar to the preceding form; but these sheets contain depressions 21 which are distributed over each side, thus furnishing depressions on each page, on the rearward side as well as on the forward side, as best shown in Fig. 6.

In making these compound sheets, a slot or unperforated inner sheet 20′ is used and two perforated outer sheets 20″ which have openings 21′ distributed over the entire length, as best shown in Fig. 5; then suitable adhesive material 22 is used and is preferably placed over both sides of the inner sheet or member 20′; these three sheets are then pressed together with the two perforated sheets 20″ on the outer sides and retained by the adhesive material upon member 20′; these sheets are then mounted in suitable covers and then fastened therein at the center line 24 in any approved and well known manner, thus providing depressions 21 distributed over each page, for convenient mounting of photographs within said depressions by merely moistening the adhesive material 22 contained in the bottom of said depressions and placing said photographs within said depressions, pressing them down against said adhesive material.

A suitable index 25 is also provided in the album, as illustrated in Fig. 7, which preferably includes the word "Page" with the respective numbers thereof, and has as many lines provided under each page, for suitable inscriptions, as there are depressions for photographs on said particular page.

While I have illustrated and described the preferred form of construction for carrying my invention into effect, this is capable of variation and modification without departing from the spirit of the invention. I, therefore, do not wish to be limited to the precise details of construction set forth, but desire to avail myself of such variations and modifications as come within the scope of the appended claims.

Having described my invention, what I claim as new and desire to secure by Letters Patent is:

1. A compound sheet for an album, said sheet consisting of a plurality of superposed sheets of substantially equal size fastened upon each other, cut out portions formed on said sheet, of a depth and area to receive and embrace a photograph to have its face portion flush with the face portion of said sheet, and adhesive means in the bottom of said cut out portion for fastening said photograph therein.

2. An album comprising compound sheet means which extend across the entire length of the album and are bound together at the middle, each providing two complete sheets of said album, a depression provided on the forward page of each of said sheets and of a size for mounting a photograph within the confines of said depression, and means for fastening said photograph in said depression.

3. An album comprising compound sheet means consisting of superposed sheets fastened together with adhesive material and arranged in the album to form two complete sheets thereof, depressions formed in said compound sheet means by cutting openings in one of said superposed sheets, and of a depth and area to receive and closely embrace a photograph, and adhesive material in the bottom of said depressions for permanently fastening said photograph therein.

4. An album including a compound and multiple sheet means constituting several complete sheets of the album, each sheet means including equal sized sheets having openings in a part of each of them leaving the other part solid which are fastened together so that the openings of each sheet come against the solid part of the other sheet and form depressions on the forward side of each sheet of said compound multiple sheet means to exactly fit photographs therein.

5. The method of making a compound sheet comprising the taking of similar equal size sheets and providing openings in some of them, then pasting said sheets together with adhesive material so that the openings in one sheet will come against a solid part of the attached sheet to form depressions with adhesive material in the bottom thereof for mounting and fastening photographs therein.

6. The method of making an album including compound sheet means, said method comprising the taking of sheets of similar size provided with openings adjacent the ends of said sheets, then placing adhesive material over the meeting faces of said sheets and pressing and pasting the sheets together therewith so that the openings of one sheet come against a solid portion of the other sheet to form depressions for receiving and fastening photographs therein, and then binding said compound sheet means across the middle in suitable covers so that each extends across both covers and will provide two complete sheets each sheet having depressions on the forward side thereof.

7. An album comprising compound sheet means constructed of similar sized sheets which are provided with openings adjacent one end and are fastened together with ad-

hesive means placed over the meeting faces of said sheets, thereby forming depressions adjacent one end of each side of said compound sheet means and also having adhesive material positioned at the bottom of said depressions for mounting and fastening photographs therein by merely moistening said adhesive material.

In testimony whereof I have signed my name to this specification in the presence of two subscribing witnesses.

CARL SIMON.

Witnesses:

JOSHUA R. H. POTTS,

FREDA C. APPLETON.