March 18, 1952 A. GRISANTI 2,589,802

WAIST GRIP BELT STRAP

Original Filed Nov. 24, 1948

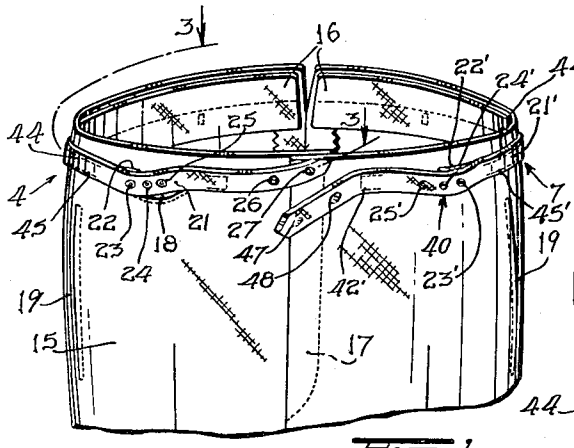

FIG. 1.

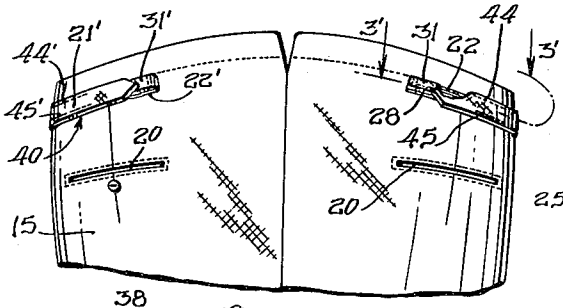

FIG. 2.

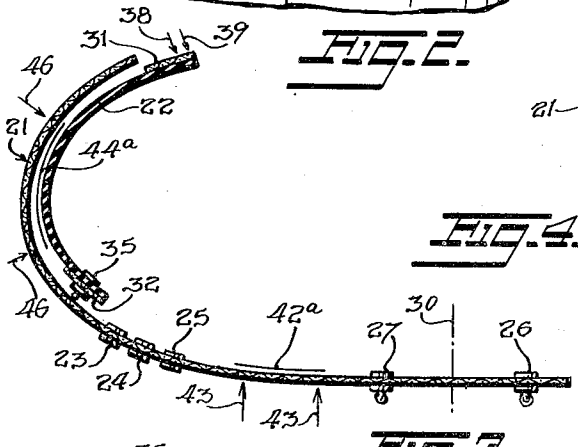

FIG. 3.

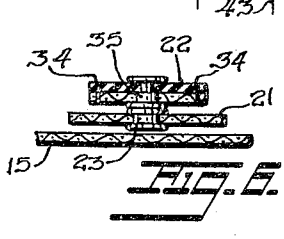

FIG. 6.

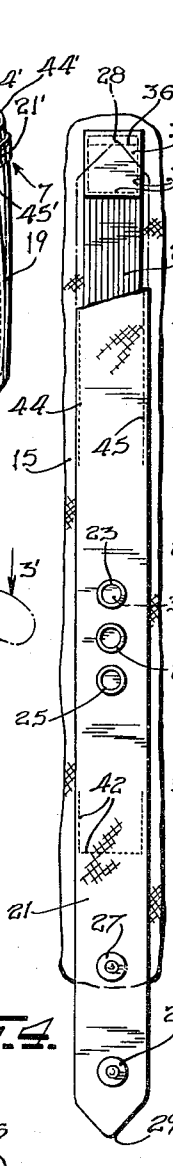

FIG. 4.

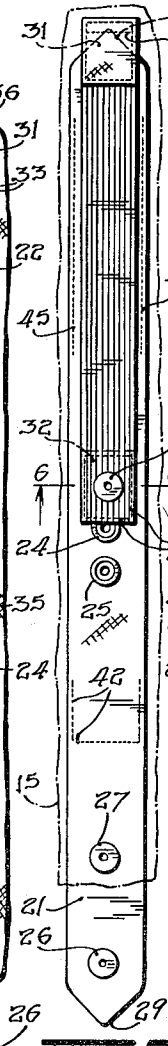

FIG. 5.

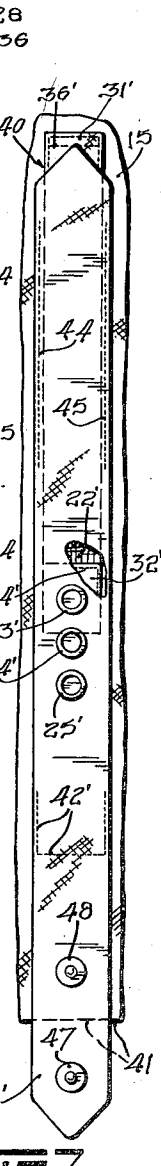

FIG. 7.

INVENTOR.
AMEDEO GRISANTI
BY
ATTORNEY

Patented Mar. 18, 1952

2,589,802

UNITED STATES PATENT OFFICE

2,589,802

WAIST GRIP BELT STRAP

Amedeo Grisanti, Mount Vernon, N. Y.

Substituted for abandoned application Serial No. 61,870, November 24, 1948. This application March 17, 1951, Serial No. 216,137

8 Claims. (Cl. 2—237)

1

This invention relates to new and useful improvements in belt-type waist-grip means for articles of apparel such as men's trousers, and, more particularly, the aim is to provide a novel and valuable waist-grip means for attachment to the outside of the waist portion of the garment. This is a substitute for my abandoned application, filed on November 24, 1948, Serial No. 61,870.

The invention, for purposes of illustration and to emphasize what is now deemed to be a prime utility thereof, will from now on be described with relation to its use in connection with men's trousers, as a substitute for the usual belt and/or suspenders, and one of marked superiority thereover.

The main object of the invention is not merely to support the trousers comfortably at the waist portion thereof, but also to save clothing manufacturers and retailers the necessity of having to make previously required alteration and other expenditures, these add to a tremendous annual total in the industries involved, and to avoid in that connection the use of badly needed labor. For example, all the seven conventional belt loops around the outside of the waist may be eliminated; and from 60 to 70% of the ordinary encountered alterations of taking in and letting out the trousers will no longer be necessary. Aside from these advantages, there is saved for the purchaser of the trousers the expense of buying belts; and the bother of transferring a belt from one pair of trousers to another is obviated.

A feature of the invention is that the new waist-grip means, because it can be made of the same material as the trousers or of a material stylishly conformable to the trousers material, will add to the attractiveness of the trousers.

A further feature of the invention, one probably of most importance from the standpoint of the purchaser, is that the new waist-grip means will automatically function, and in a completely concealed manner although said means is at the outside of the trousers, to take care of his waist-size fluctuations, by expanding and contracting in agreement with the from time to time occurring expansions and contractions of his waist measure.

Another feature of the invention, moreover, is that the new waist-grip means is readily adjustable by the wearer of the trousers, in that he can take in or let out the trousers at the waist to any one of several amounts in a matter of seconds.

Also among the objects attained by the invention, and one of considerable importance to the trousers manufacturer, is the provision of a

2

waist-grip means having all the above recited advantages, yet one which, nevertheless, is exceedingly simple in construction and of relatively small cost to produce, both in regard to the few parts and inexpensive materials used, and in regard to the labor cost in fabricating said means and in attaching the same to the outside of the trousers.

The new waist-grip means of the invention, in its presently preferred form, comprises two substantially alike plural-strap assemblies, each including a non-stretchable strap element and a longitudinally stretchable strap element; with such assemblies so carried at the exterior of the waist portion of the trousers that, with these assemblies secured to the opposite sides of the trousers and suitably rearwardly extended toward and to the back of the trousers, the forward ends of the non-stretchable strap elements may be overlapped at the front central part of the trousers.

For further comprehension of the invention, and of the objects and advantages thereof, reference will be had to the following description and accompanying drawings, and to the appended claims in which the various novel features of the invention are more particularly set forth.

In the accompanying drawings forming a material part of this disclosure:

Fig. 1 is a frontal perspective view of the upper portion of a pair of trousers in somewhat opened condition with the fly closed, and provided with a now favored embodiment of the invention.

Fig. 2 is a rear elevational view of the trousers, spread substantially flat at the waist.

Fig. 3 is, on a somewhat enlarged scale, a substantially horizontal section taken on the line 3—3 of Fig. 1 and along the line 3'—3' of Fig. 2; but with the trousers material not shown.

Fig. 4 shows, in outside elevation, and with the non-stretchable strap element partially broken away, the one of the aforesaid assemblies at the left in Fig. 1 and at the right in Fig. 2, that is, the assembly at the right side of the trousers, viewed as indicated by the arrow 4 of Fig. 1 but imagined spread out flat; this view being drawn to about 70% of full scale.

Fig. 5 is an inside elevation of said assembly, arranged as in Fig. 4.

Fig. 6 is an enlarged detail view, being a transverse section taken on the line 6—6 of Fig. 5.

Fig. 7 is a view like Fig. 4, but showing the other assembly, viewed as indicated by the arrow 7 of Fig. 1.

Referring to the drawing more in detail, a

conventionally tailored pair of trousers 15 is shown, having a waist portion with the usual lining 16, and provided with a closable fly 17, a front pocket 18, a pair of side pockets 19, and a pair of back or hip pockets 20.

The two assemblies of the new waist-grip means are exactly alike, except that one is provided at certain locations on its non-stretchable strap element with a plurality of snap-fastener post parts and the other is provided at corresponding locations on its non-stretchable strap element with the complementary parts of said snap fasteners.

The assembly at the left in Fig. 1 will first be described, and referring now also to Figs. 1–5, this assembly consists of two main units, a longer outer non-stretchable strap 21, as one of a suitable cloth, and a shorter inner longitudinally stretchable strap 22, as one constituted by a length of textile tape including interwoven rubber strands for rendering the tape stretchable along its length.

For a pair of trousers size 32, the strap 21, pointed at opposite ends, is 13" long and 1⅛" wide. The elastic strap 22 is 6½" long and ¾" wide. Because the elastic strap plays a very important part in each assembly, the elastic strap is of heavy or strong elastic action; such as a fairly heavy so-called lastex strip woven on the bias.

On the strap 21, snap fastener parts are placed and spaced according to scientifically ascertained data relative to the human body; these snap fastener parts comprising three socket parts 23, 24 and 25 and two post parts 26 and 27. The socket part 23 is 6" from the back point 28 of said strap, the socket part 24 is ½" forward of the socket part 23, and the socket part 25 is ½" forward of the socket part 24. The post part 26 is 1" back from the forward point 29 of said strap, and the post part 27 is 2" back from the post part 26. The dot and dash line 30 in Fig. 3 represents the center of overlap of the strap 21 and of the corresponding strap of the other assembly when the forward ends of both said straps are connected at the front of the trousers by the fastener parts 26 and 27 and the complementary fastener parts of said corresponding strap. The fastener parts 23, 24 and 25, and the corresponding fastener parts of the cloth strap of the other strap assembly, are the waist-girth adjusting fastener parts.

Attached to the elastic strap 22, at its outer side, and at its ends, are cover pieces 31 and 32 of non-stretchable material, to contribute strength and insure even stretch of the strap 22 at all points across its width; the piece 31 being all around the same stitched as indicated at 33 in Fig. 4 to the strap at the rear end of the latter, and the piece 32 being similarly secured to the strap at the forward end thereof by a line of stitching 34 (Figs. 5 and 6).

On the elastic strap 22 there is placed, based on the data aforesaid, the post part 35 of a snap fastener complementary to any selected one of the three fastener parts 23, 24 and 25 of the strap 21, said part 35 having its post outwardly directed from the strap 22. The fastener part 35, secured at the center of the piece 32, is at a point along the strap 22 which is the same distance from the rear end thereof as the fastener part 23 is from the rear end of the strap 21; that is, said fastener part 35 is spaced 6" from the rear end of the elastic strap 22.

The rear end of said strap 22 is secured to the

outside of the trousers, at a location thereon as indicated in Fig. 2, as by the length of the stitching 33 which extends laterally of said strip at the rear end of it and of the piece 31 and by another line of cross stitching 36 (the lines of application of these two anchoring stitchings for the rear end of the strap 21 being indicated by the small arrows 38 and 39 of Fig. 3); whereby, with the fastener part 35 engaged with the fastener part 23 as in Figs. 4 and 5, and with the forward end portion of the strap 21 brought around the waist and arranged relative to the dot and dash line 30 as indicated in Fig. 3, the elastic strap 22 is under no stretch. The distance from each back point 28 of the strap 21 to the edge of each elastic strap 22 when sewn on the trousers is preferably ½", therefore when the fastener parts 35 are engaged with the fastener parts 23, the waistline is reduced 1" and when they are engaged with fastener parts 24, the waistline is reduced 2" and finally when they are engaged with fastener parts 25, the waistline is reduced 3".

Two other important securements of the cloth strap 21 to the trousers material will be explained in a moment; but preliminarily it may be pointed out that for a practical reason the other strap assembly, this as a whole marked 40 in Figs. 1, 2 and 7, should have its elastic strap 22' attached properly at its rear end to the trousers before the strap 21' is thus attached.

Preparatory to attaching the rear end of the elastic strap 22' to the trousers by stitches corresponding to the stitches indicated by said arrows 38 and 39 of Fig. 3, the strap 22' is laid around the waist of the trousers to insure that when the last referred to stitchings are completed said strap 21' will be secured so as to have a natural downwardly forwardly extended inclination such that with the rear end of said strap spaced down about 1" from the top of the trousers the forward end of the strap 21' when attached to the strap 22' will tend to be spaced down about ½" from said top at the location of the fly 17; this for the reason that the backs of trousers are cut higher than their fronts. In Fig. 7, showing said assembly 40 in detail, the edge of said fly is indicated at 41. In securing the rear end of the strap 22' to the trousers, the location of the edge 41 of the fly should coincide with the location of the dot and dash line 30 of Fig. 3.

The strap 22' having been secured as above at its rear end to the trousers, and the strap 22 having been similarly secured as already explained by the stitchings 36 and 36' and by the portion of the stitchings 33 and 33' adjacently paralleling the stitchings 36 and 36', the other important securements of the straps 21 and 21' mentioned at the beginning of the second preceding paragraph may be effected. Whether or not it is the strap 21 or the strap 21' which is first thus additionally secured is unimportant.

For example, say it is the strap 21 which is first thus additionally secured.

One of these additional securements is a stitching comprising a lazy-U line of tacking 42, the limits of which longitudinally of the strap 21 are 1" from the fastener part 25 and 1¼" from the fastener part 27, as indicated by the line 42a of Fig. 3 and the two small arrows 43 in that view.

The other of these additional securements is a stitching comprising two lines of tacking 44 and 45; these tackings, running along and close

to the top and bottom edges of the strap 21, being extended between the limits of 2'' in rear of the fastener part 23 and of 1½'' from the rear end 28 of the strap, as indicated by the line 44a in Fig. 3 and the two small arrows 46 in that view. From end to end of these tackings 44 and 45, and between the material of the trousers and the strap 21, there is provided a tunnel through which the elastic strap 22 is passed and becomes invisible.

Referring to the assembly 40, for the left side of the trousers, the elements to which are applied reference numerals with primes added correspond, respectively, to the elements of the assembly for the right side of the trousers to which are applied reference numerals without primes; and the strap 21' differs from the strap 21 solely in that the former carries snap fastener socket parts 47 and 48 at the locations where the strap 21 carries the snap fastener post parts 26 and 27. The assembly 40 has its strap 21' stitched to the trousers exactly as has been described for the cloth strap 21, with the stitchings at the rear end of said strap placed so as downwardly inclinningly to attach said end to the rear of the trousers at one side thereof as the rear end of the strap 21 was attached to the rear of the trousers at the other side thereof.

When the fastener part 35 of the elastic strap 22 is transferred from the fastener part 23 to the fastener part 24 of the cloth strap 21, and the fastener part 35' of the elastic strap 22' is transferred from the fastener part 23' to the fastener part 24' of the cloth strap 21', the waist becomes 1'' smaller than with said elastic strips unstretched, and when such transfers are made to, respectively, the fastener parts 25 and 25', the waist is further reduced by 1'' with the elastic strips unstretched. The elastic straps 22 and 22' remain unstretched unless pulls are applied thereto and the portions of the trousers between the attached rear ends of the elastic straps 22 and 22' and the attached rear ends of the cloth straps 21 and 21' are drawn together.

Thus, the surplus material at the upper part of the trousers concentrates itself between the attached rear ends of the elastic straps 22 and 22' and the rear of the two above-mentioned tunnels, and for each forward adjustment of the elastic straps 22 and 22' such surplus material laps over itself in pleat form, and, because the securement of the rear end of each of the cloth straps 21 and 21' is spaced back 1½'' from the rear end of its tunnels, the elastic straps are free for easy entry into the tunnels without interference from the pleat formations which occur.

With the fly 17 closed, the front ends of the cloth straps 21 and 21' overlap each other over a distance of 2'', and the fastener parts 47 and 48 are in position to snap, respectively, onto the fastener parts 26 and 27.

Trousers provided with the waist-grip means of the invention, when adjusted to suit a waist measurement, are while being worn perfectly smooth all around with the exception of such of the above-mentioned pleat formations as are present, and with the elastic straps 22 and 22' left free to stretch or contract in agreement with expansions and contractions of the wearer's body at the waist. The trousers, furthermore, will hang in perfect balance, without the usual sagging which often spoils the appearance of even well-cut trousers.

The two strap assemblies extend all around

three-fourths of the waist, minus 2''. The uncovered portion of the trousers is at the back, between the two rear end securements of the cloth straps 21 and 21'. This area can be covered by another cloth strap, to give the appearance of a belt all around the waist, if desired.

A modification within the invention would be one in which the adjusting fastener parts 23, 24 and 25, and also the adjusting fastener parts 23', 24' and 25', would be attached, not to the cloth straps 21 and 21' and to have their sockets face away from the undersides of said straps, but, instead, to the trousers material with their sockets facing away from the outer side of said material; these socket parts for coaction with the posts of the fastener parts 35 and 35' on, respectively, the elastic straps 22 and 22'.

Another modification within the invention would be one in which the elastic straps at their rear ends are merely detachably secured to the trousers, as by snap fasteners there employed.

The new waist-grip assemblies are scientifically graded for every two sizes.

Use of the new waist-grip means will, aside from affording the advantages already mentioned, save the wearer the expense of having the trousers taken in or let out, as from time to time may be required by changes in personal weight and other physical changes.

The new waist-grip means can be used for all types of trousers and slacks, for adults and children; also for women's and misses' slacks, skirts and dresses; and likewise for rest and lounging pajamas.

While I have illustrated and described the preferred embodiments of my invention, it is to be understood that I do not limit myself to the precise constructions herein disclosed and the right is reserved to all changes and modifications coming within the scope of the invention as defined in the appended claims.

Having thus described my invention, what I claim as new, and desire to secure by United States Letters Patent is:

1. A belt-type waist-grip means for an apparel garment, comprising two strap assemblies both carried by the waist portion of the garment at opposite sides thereof, each strap assembly having as its two main units an outer non-stretchable strap and an underlying longitudinally stretchable elastic strap of less length than the first-named strap, said first-named strap of each assembly intermediate the ends of said strap being secured to the garment adjacent to and along the upper and lower longitudinal edges of said strap to provide a tunnel between said strap and the outer material of the garment, said elastic strap in each assembly being extended through said tunnel, in each assembly the rear end of said first-named strap being secured to the garment at the back thereof and at one side of said back and the rear end of said elastic strap being also secured to the garment adjacent to the rear end of said first-named strap, snap fasteners in each assembly partially carried by each of the two straps thereof for locating the point of connection of the forward end of the elastic strap to the first-named strap at a selected one of several different distances from the front end of said last-named strap, and a snap fastener partially carried by each of the two non-stretchable straps near their forward ends, the

two non-stretchable straps being long enough to overlap at the front of the garment for coaction of the fastener parts of the last-named fastener.

2. A belt-type waist-grip means for an apparel garment, comprising two strap assemblies both carried by the waist portion of the garment at opposite sides thereof, each strap assembly having as its two main units an outer non-stretchable strap and an underlying longitudinally stretchable elastic strap of less length than the first-named strap, said first-named strap of each assembly intermediate the ends of said strap being secured to the garment adjacent to and along the upper and lower longitudinal edges of said strap to provide a tunnel between said strap and the outer material of the garment, said elastic strap in each assembly being extended through said tunnel, in each assembly the rear end of said first-named strap being secured to the garment at the back thereof and at one side of said back and the rear end of said elastic strap being also secured to the garment adjacent to the rear end of said first-named strap, snap fasteners in each assembly partially carried by each of the two straps thereof for locating the point of connection of the forward end of the elastic strap to the first-named strap at a selected one of several different distances from the front end of said last-named strap, and a plurality of snap-fasteners each partially carried by each of the two non-stretchable straps near their forward ends.

3. A belt-type waist-grip means for an apparel garment, comprising two strap assemblies both carried by the waist portion of the garment at opposite sides thereof, each strap assembly having as its two main units and outer non-stretchable strap and an underlying longitudinally stretchable elastic strap of less length than the first-named strap, said first-named strap of each assembly intermediate the ends of said strap being secured to the garment adjacent to and along the upper and lower longitudinal edges of said strap to provide a tunnel between said strap and the outer material of the garment, said elastic strap in each assembly being extended through said tunnel, in each assembly the rear end of said first-named strap being secured to the garment at the back thereof and at one side of said back and the rear end of said elastic strap being also secured to the garment adjacent to the rear end of said first-named strap, snap fasteners in each assembly partially carried by each of the two straps thereof for locating the point of connection of the forward end of the elastic strap to the first-named strap at a selected one of several different distances from the front end of said last-named strap, and means for detachably coupling the two non-stretchable straps at the front of the garment.

4. A belt-type waist-grip means for an apparel garment, comprising two strap assemblies both carried by the waist portion of the garment at opposite sides thereof, each strap assembly having as its two main units an outer non-stretchable strap and an underlying longitudinally stretchable elastic strap of less length than the first-named strap, said first-named strap of each assembly intermediate the ends of said strap being secured to the garment adjacent to and along the upper and lower longitudinal edges of said strap to provide a tunnel between said strap and the outer material of the garment, said elastic strap in each assembly being extended through said tunnel, in each assembly the rear end of said first-named strap being secured to the garment at the back thereof and at one side of said back and the rear end of said elastic strap being also secured to the garment adjacent to the rear end of said first-named strap, snap fasteners in each assembly partially carried by each of the two straps thereof for locating the point of connection of the forward end of the elastic strap to the first-named strap at a selected one of several different distances from the front end of said last-named strap, both of said non-stretchable straps being also secured to the garment at points ahead of the forward ends of said tunnels.

5. A belt-type waist-grip means for an apparel garment, comprising two strap assemblies both carried by the waist portion of the garment at opposite sides thereof, each strap assembly having as its two main units an outer non-stretchable strap and an underlying longitudinally stretchable elastic strap of less length than the first-named strap, said first-named strap of each assembly intermediate the ends of said strap being secured to the garment adjacent to and along the upper and lower longitudinal edges of said strap to provide a tunnel between said strap and the outer material of the garment, said elastic strap in each assembly being extended through said tunnel, in each assembly the rear end of said first-named strap being secured to the garment at the back thereof and at one side of said back and the rear end of said elastic strap being also secured to the garment adjacent to the rear end of said first-named strap, snap fasteners in each assembly partially carried by each of the two straps thereof for locating the point of connection of the forward end of the elastic strap to the first-named strap at a selected one of several different distances from the front end of said last-named strap, both of said non-stretchable straps being also secured to the garment at points ahead of the forward ends of said tunnels, the securement of the rear end of each first-named strap to the outer material of the garment being such as to urge that strap to a downward forward inclination longitudinally thereof toward its front end.

6. A belt-type waist-grip means for an apparel garment, comprising two strap assemblies both carried by the waist portion of the garment at opposite sides thereof, each strap assembly having as its two main units an outer non-stretchable strap and an underlying longitudinally stretchable elastic strap of less length than the first-named strap, said first-named strap of each assembly intermediate the ends of said strap being secured to the garment adjacent to and along the upper and lower longitudinal edges of said strap to provide a tunnel between said strap and the outer material of the garment, said elastic strap in each assembly being extended through said tunnel, in each assembly the rear end of said first-named strap being secured to the garment at the back thereof and at one side of said back and the rear end of said elastic strap being also secured to the garment adjacent to the rear end of said first-named strap, snap fasteners in each assembly partially carried by each of the two straps thereof for locating the point of connection of the forward end of the elastic strap to the first-named strap at a selected one of several different distances from the front end of said last-named strap, both of said non-stretchable straps being also secured to the garment at points ahead of the forward ends

of said tunnels, the securement of the rear end portion of each first-named strap incorporating a stitching laid down while the rear end of that strap is forwardly downwardly inclined.

7. A belt-type waist-grip means for an apparel garment, comprising two strap assemblies both carried by the waist portion of the garment at opposite sides thereof, each strap assembly having as its two main units an outer non-stretchable strap and an underlying longitudinally stretchable elastic strap of less length than the first-named strap, said first-named strap of each assembly intermediate the ends of said strap being secured to the garment adjacent to and along the upper and lower longitudinal edges of said strap to provide a tunnel between said strap and the outer material of the garment, said elastic strap in each assembly being extended through said tunnel, in each assembly the rear end of said first-named strap being secured to the garment at the back thereof and at one side of said back and the rear end of said elastic strap being also secured to the garment adjacent to the rear end of said first-named strap, snap fastener means in each assembly and incorporating one part of such a fastener secured to said elastic strap and a plurality of spaced complementary fastener parts carried by said non-stretchable strap, end means for detachably coupling the two non-stretchable straps at the front of the garment.

8. A belt-type waist-grip means for an apparel garment, comprising two strap assemblies both carried by the waist portion of the garment at opposite sides thereof, each strap assembly having as its two main units an outer non-stretchable strap and an underlying longitudinally stretchable elastic strap of less length than the first-named strap, said first-named strap of each assembly intermediate the ends of said strap being secured to the garment adjacent to and along the upper and lower longitudinal edges of said strap to provide a tunnel between said strap and the outer material of the garment, said elastic strap in each assembly being extended through said tunnel, in each assembly the rear end of said first-named strap being secured to the garment at the back thereof and at one side of said back and the rear end of said elastic strap being also secured to the garment adjacent to the rear end of said first-named strap, snap fastener means in each assembly and incorporating one part of such a fastener secured to said elastic strap and a plurality of spaced complementary fastener parts carried by said non-stretchable strap, and means for detachably coupling the two non-stretchable straps at the front of the garment, the means last-named comprising a plurality of snap fasteners each partially carried by each of the two non-stretchable straps near their forward ends.

AMEDEO GRISANTI.

REFERENCES CITED

The following references are of record in the file of this patent:

UNITED STATES PATENTS

Number	Name	Date
1,881,704	Langrock	Oct. 11, 1932
2,298,381	Horwitz	Oct. 13, 1942
2,413,180	Grisanti	Dec. 24, 1946