Aug. 28, 1956 J. B. WYATT 2,760,717

ENVELOPE

Filed April 15, 1954

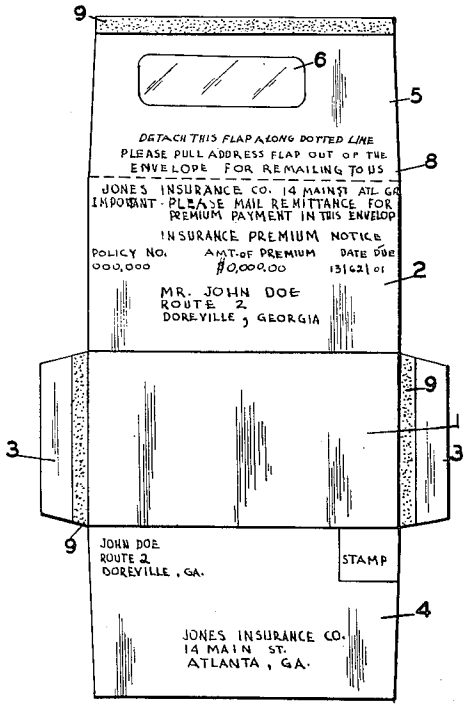

FIG 1

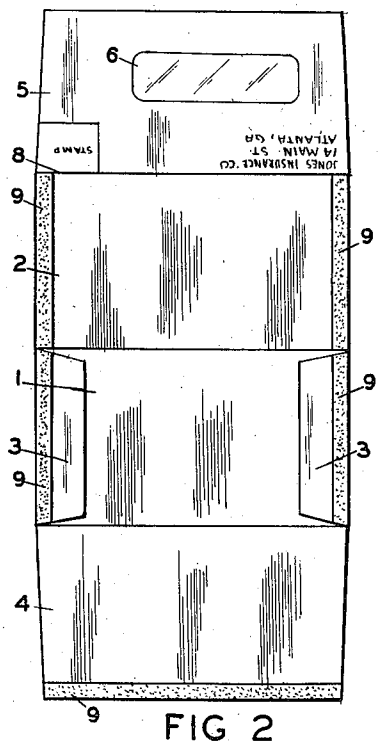

FIG 2

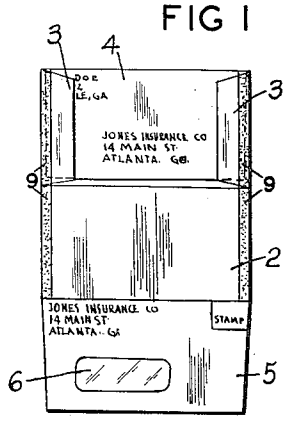

FIG 3

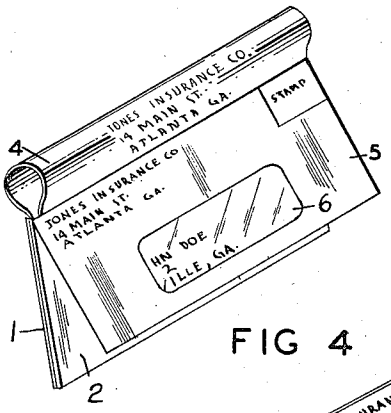

FIG 4

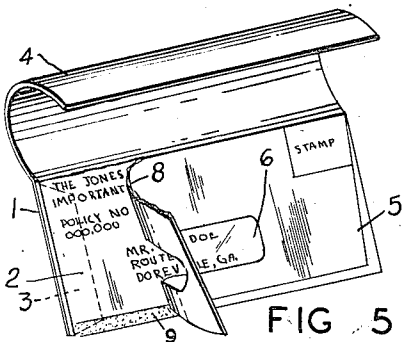

FIG 5

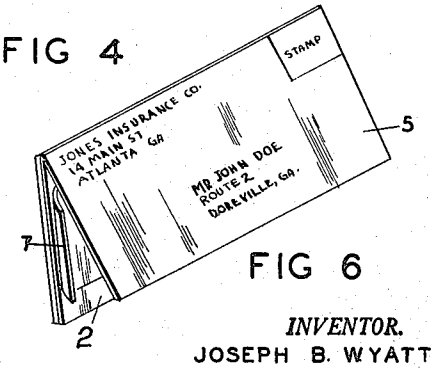

FIG 6

INVENTOR.
JOSEPH B. WYATT

BY

ATTORNEY

United States Patent Office 2,760,717 Patented Aug. 28, 1956

2,760,717

ENVELOPE

Joseph B. Wyatt, Marietta, Ga.

Application April 15, 1954, Serial No. 423,334

7 Claims. (Cl. 229—73)

My invention relates to an envelope, and more particularly to that class of envelope, or mailing piece, known as a "return envelope" and provides an envelope which, after it has been delivered, opened and the message read, may be used as the envelope in which to return the reply to the sender.

One object of my invention is to provide an envelope on which information is printed or typed, especially in connection with business transactions, so that upon return to the sender with an appropriate enclosure, such as a remittance, the specific transaction dealt with may be speedily identified and appropriate bookkeeping performed without need for withdrawing a file jacket from a cabinet.

Another object of my invention is to provide an envelope on which all necessary information both for sending and for returning may be typed or stenciled at the time of initial use.

Other and further objects and advantages of my invention will be apparent from the following description, taken in connection with the accompanying drawings in which like characters of reference designate corresponding parts in the several views, and wherein:

Fig. 1 shows the outside of an envelope blank, according to my invention, unfolded and the information typed thereon.

Fig. 2 shows the reverse side of the blank seen in Fig. 1.

Fig. 3 shows the return addressed portion of the envelope folded into place for the first mailing, before the remainder of the envelope is assembled.

Fig. 4 shows the manner of withdrawing the return address flap portion from the envelope.

Fig. 5 shows the removal of the first addressee portion and the return addressee flap portion ready to be brought into position for return.

Fig. 6 shows a slightly different exemplification of the device.

As seen in Fig. 1, the return envelope of my invention is made of a single blank of paper which is folded into an envelope having two flaps. Panel portion 1 of the blank forms the back of the envelope pocket and portion 2 forms the face. The tabs 3 serve to secure the back 1 to the face 2 of the envelope.

As will be seen in Fig. 4 back 1 and face 2 and tabs 3 form a pocket so that flap or panel 4 on back 1, which is almost as large as the pocket, may be folded into the pocket and be again withdrawn, as seen in Figs. 3 and 4.

On face 2 is provided a panel or flap 5 having an opening or "window" 6 which, in use, is folded down outside of face 2 to cover all of the information thereon except the name and address of the original addressee. A line of perforations 8 is preferably provided at the juncture of panel 5 with the face of the envelope pocket.

Appropriate areas of adhesive are provided in a manner known in the art. Such areas are shown by the numeral 9 in the drawings.

To illustrate how the envelope of my invention is used: The blank of Fig. 1 is placed in the typewriter of the company using the mailing piece, and all information necessary to the specific transaction over and above the printed matter, which is already provided, is typed on the obverse side of the blank. No typing is required on the reverse side. Flap 4 is then folded, as seen in Fig. 3, to lie on back portion 1. Tabs 3 are folded and

face 2 is secured in place by adhesive 9. Then flap 5 is folded over the face 2 and adhesively secured, leaving the name and address of the addressee exposed. The mailing piece is then ready for stamping and mailing.

Upon receipt by the addressee, the flap covering the face is torn away, as seen in Fig. 5, the flap 4 is withdrawn from the pocket formed by 1, 2, 3 and, having placed a remittance in the pocket, flap 4 is folded down over face 2 and sealed in place. Flap 4 then presents the originator's name and address as addressee, and the mailing piece requires only stamping and mailing to return it to the originator.

As seen in Fig. 6, the flap 5 may be solid instead of windowed. In this case the envelope may be printed and folded into the form for original mailing by the stationer. A carbon insert 7 may be placed under the flap in folding, or the inner surface of the flap 5 may be carbonized. The information that is desired to be placed on the face of the envelope may be printed, in carbon, through the flap onto the face by means of a plate, a ribbon being used for that part of the plate which has the name and address of the addressee on it so it will appear on the outside. The mailing piece is then ready for stamping and mailing. In this exemplification, it will be seen that no manual labor need be expended by the originator in taking and folding the mailing piece. This exemplification is of especial use where remittances in equal amounts are required at regular intervals over a long period of time such as monthly installments on purchases, etc.

It will be obvious to those skilled in the art that many variations may be made in the embodiment chosen for purpose of illustration without departing from the scope of my invention as defined by the following claims.

I claim:

1. A return reply mailing piece folded from an integral blank of sheet material, said blank comprising four areas of substantially the same area, of which the center two areas are folded along their common margin and secured at their sides to form the face and back of an envelope pocket, the end area of said blank having a margin common with the face of said pocket being folded outwardly to overlie said face and cover information carried by said face, the end area of said blank having a margin cover common with the back of said pocket being folded inwardly to be disposed within said pocket.

2. The device of claim 1 in which the area overlying the face of said pocket is provided with a window to disclose a portion of the information on said face.

3. The device of claim 1 in which a line of perforations is provided along the margin of the face of the pocket and the adjacent end area.

4. The device of claim 1 in which the face of said pocket carries an original address, and in which the end area folded to lie within the pocket carries a return address.

5. The device of claim 1 in which the area that overlies the face of the envelope pocket carries an original address and the area folded to lie within the pocket carries a return address.

6. The device of claim 1 in which a carbon surface is provided between the face of the pocket and the overlying area of the blank.

7. The device of claim 1 in which a sheet of carbon paper is disposed between the face of said pocket and the overlying end area.

References Cited in the file of this patent

UNITED STATES PATENTS

1,995,183	Kovnat	Mar. 19, 1935
2,355,348	Welliver	Aug. 8, 1944