Feb. 9, 1954 D. C. GERBER 2,668,313

CONVERTER ARRANGEMENT FOR SUCTION CLEANERS

Filed May 27, 1950

2 Sheets-Sheet 1

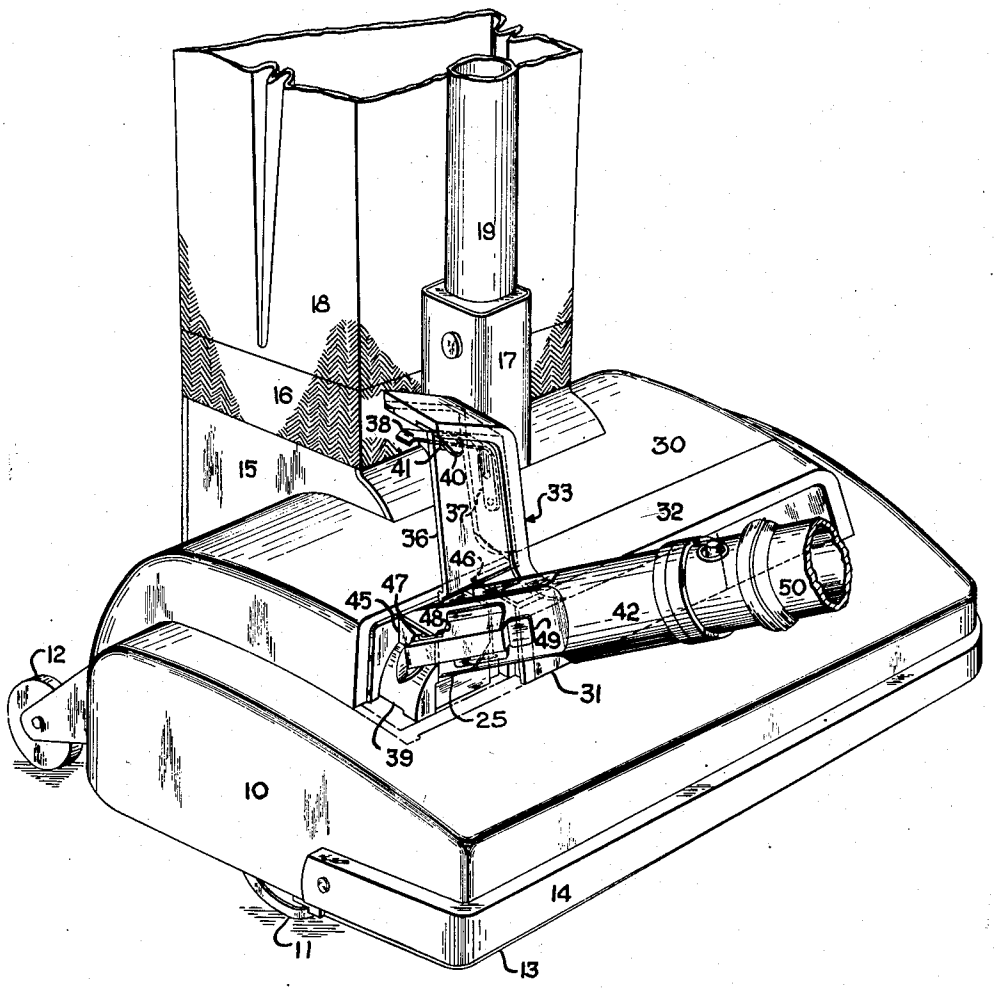

Fig. 1

INVENTOR.
Dale C. Gerber
BY
Harry S. Dumasse
ATTORNEY.

Feb. 9, 1954 D. C. GERBER 2,668,313

CONVERTER ARRANGEMENT FOR SUCTION CLEANERS

Filed May 27, 1950

2 Sheets-Sheet 2

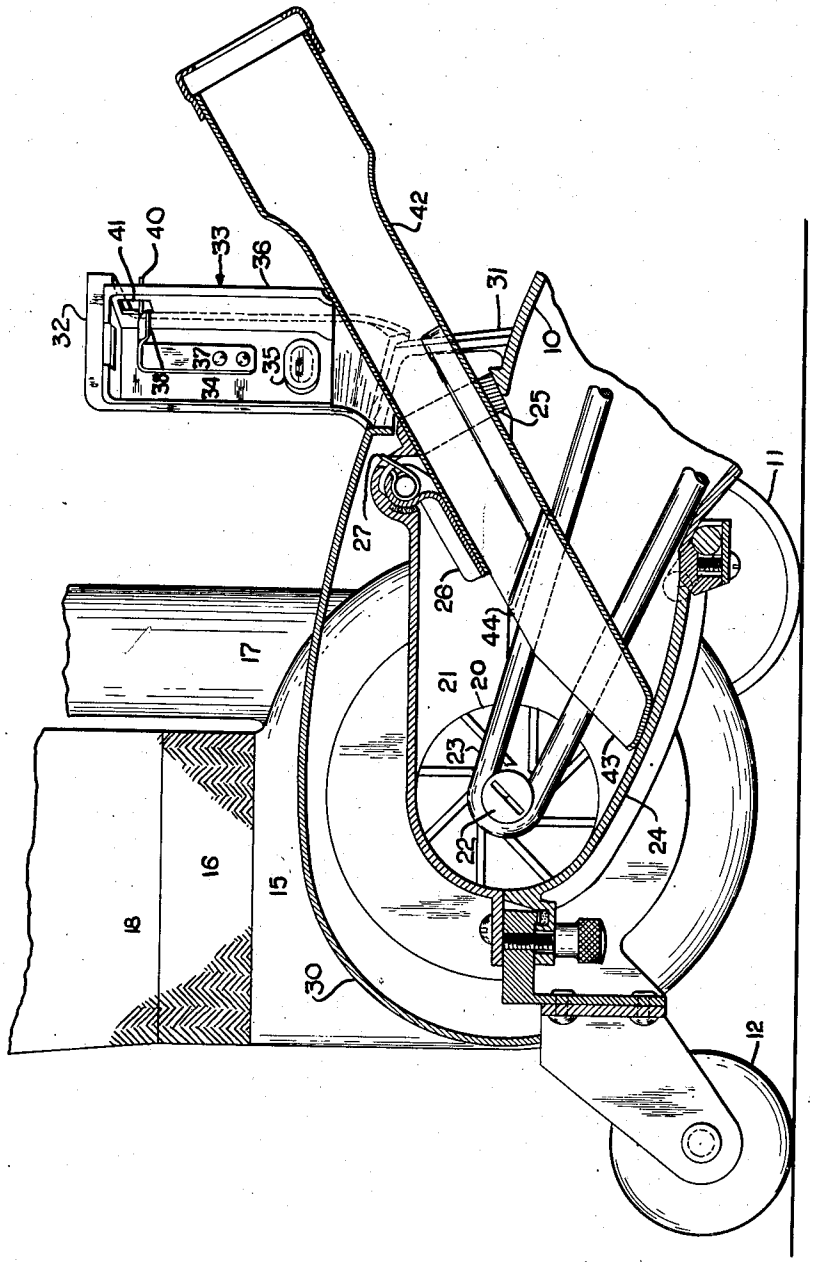

Fig. 2

INVENTOR.
Dale C. Gerber
BY
Harry E. Dumary
ATTORNEY.

Patented Feb. 9, 1954

2,668,313

UNITED STATES PATENT OFFICE

2,668,313

CONVERTER ARRANGEMENT FOR SUCTION CLEANERS

Dale C. Gerber, North Canton, Ohio, assignor to The Hoover Company, North Canton, Ohio, a corporation of Ohio

Application May 27, 1950, Serial No. 164,780

5 Claims. (Cl. 15—325)

1

This invention relates to suction cleaners and more particularly to a converter arrangement for converting suction cleaners from on-the-floor cleaning to off-the-floor cleaning.

Specifically, according to the present invention, a furniture guard of rubber, thermoplastic or other suitable material forms a continuation of the appearance hood and extends across the headlight housing, is of sectional formation and one section forms a closure for the converter receiving opening and conforms generally to the shaped outline of the cleaner hood to preserve the appearance of the cleaner and also hide the converter receiving opening from view.

According to another feature of the present invention the converter receiving opening opens into the top front of a suction passageway so that a converter tool can be inserted from the top front of the cleaner in a downwardly and rearward direction thus making it possible to easily insert the converter and yet close the converter receiving opening by means of a portion of the furniture guard.

Other objects and advantages of this invention will become apparent as the description proceeds when taken in connection with the accompanying drawings in which:

Figure 1 is a perspective view of a suction cleaner showing the present invention applied thereto; and

Figure 2 is a sectional view through the converter receiving opening showing the converter in place and the converter opening closure in open position.

Referring to the drawings the main body or chassis 10 is supported for ambulatory movement by front and rear wheels 11 and 12 respectively and is formed with a downwardly facing suction nozzle 13 having a furniture guard 14 of rubber, thermoplastic or other suitable material extending about its ends and front.

A casing 15 which houses the motor-fan unit is pivoted to the rear of the body 10 by a pair of trunnions in a manner similar to that shown by the patent to Burkhardt 2,225,621 dated December 24, 1940. Rigid with the casing 15 is an exhaust nozzle 16 and a handle socket 17. The exhaust nozzle 16 detachably receives the lower open end of a filter bag 18 the upper end of which is supported from near the upper end of a handle 19.

The casing 15 and body 10 are formed with a fan eye 20 opening through one of the trunnions into a suction passageway 21 leading from the fan eye 20 to the nozzle 13. A pulley 22 formed

2

as an extension of the fan shaft extends through the fan eye 20 and drives the belt 23 which in turn drives an agitator (not shown) of any suitable construction mounted within the nozzle 13 so as to contact the surface covering as it is drawn upwardly against the nozzle by the suction produced by the fan. The lower wall of the suction passageway 21 is formed by a removable cover plate 24 to provide ready access to the belt and pulley.

A converter receiving opening 25 is formed in the top front portion of the converter passageway 21 and slopes downwardly and rearwardly as shown in Fig. 2. The opening 25 is normally closed by a gate valve 26 spring-biased to closed position by a spring 27.

An appearance hood 30 is suitably mounted on the top of the body 10, extends from the rear forwardly along opposite sides of the casing 15 and at its forward end forms a housing for a headlight mounted in the rear of a light transmitting lens 31. As shown in Fig. 1 the converter receiving opening 25 is positioned to one side of the lens 31.

A furniture guard 32 of rubber, thermoplastic or other suitable material forms a streamlined continuation of the appearance hood 30. The furniture guard 32 is formed with a movable section 33 which normally lies over the converter receiving opening 25. The material of the furniture guard forms a hinge for the section 33. The section 33 includes a lining plate 34 held to the rubber guard by retaining buttons 35. The plate 34 extends downwardly at 36 to form a cover for the opening 25. A spring latch 37 is secured to the under side of plate 34 and has an offset lug 38 which engages in a recess 39 to latch the section 33 in closed position. The latch 37 is provided with an operating handle 40 which extends through an opening 41 in the front plate 36.

A converter tool 42 is insertable into the converter receiving opening 25 and extends downwardly and rearwardly across the suction passageway 21 between the fan eye 20 and the nozzle 13. The converter tool 42 is provided with a rearwardly facing opening 43 and a recessed portion 44 to receive the belt 23 which lies close to the inner wall of the suction passageway 21 so that the tool 42 closes off substantially the entire area of the suction passageway 21.

Extended upwardly at the sides of the converter receiving opening 25 are a pair of upstanding walls 45 and 46 which act as guides for the tool 42 and also a support for the section 33

when it is in closed position. An opening **47** is formed in the wall **45** to receive the end **48** of a latch carried by the tool **42**. The latch may be released by pressing inwardly on its handle **49**. The upper end of the tool **42** detachably receives one end of a flexible hose **50** as is well known in the art.

From the foregoing description it is believed that the operation of the present invention is obvious. The present invention provides a simple construction by which the converter tool may be readily inserted in a downward and rearward direction and the cleaner propelled about by pulling on the hose **50**. When the converter tool is not in use the converter receiving opening is concealed from view by a portion of the cleaner which normally forms a portion of its streamlined outline.

While I have shown but a single embodiment of my invention it is to be understood that this embodiment is to be taken as illustrative only and not in a limiting sense. I do not wish to be limited to the particular structure shown and described but to include all equivalent variations thereof except as limited by the scope of the claims.

I claim:

1. A suction cleaner comprising, a body mounted for ambulatory movement, suction producing means supported by said body, said body being formed with a downwardly facing suction nozzle and with a suction passageway connecting said nozzle to said suction producing means, a converter receiving opening formed in the upper wall of said suction passageway and a furniture guard of flexible material extending across the top front portion of said body having a section normally extending across said converter receiving opening to form a cover therefor and being movable upwardly independently of the remainder of said furniture guard to uncover said opening.

2. A suction cleaner according to claim 1 in which said movable section is hinged to the remainder of said furniture guard by the material of the guard.

3. A suction cleaner according to claim 2 including a latch on the free end of said section cooperating with a latch receiving opening adjacent said converter receiving opening to hold said section in its closed position.

4. A suction cleaner according to claim 1 including guide means extending upwardly from the sides of said converter receiving opening for guiding a converter tool into said opening and forming a support for said furniture guard section when it is in its closed position.

5. A suction cleaner comprising, a body mounted for ambulatory movement, a motor-fan unit supported by said body, said unit being formed with a fan eye, said body being formed with a downwardly facing nozzle and a suction passage extending between said nozzle and said fan eye, an appearance hood suitably supported on said body to give the cleaner a streamlined appearance and including a furniture guard of flexible material extending laterally across said body to the rear of said nozzle, said furniture guard including a section pivoted thereto adjacent one end thereof and a converter receiving opening formed in the upper wall of said suction passage beneath the pivoted section of said furniture guard.

DALE C. GERBER.

References Cited in the file of this patent

UNITED STATES PATENTS

Number	Name	Date
2,017,937	Becker	Oct. 22, 1935
2,057,594	Reibel	Oct. 13, 1936
2,175,004	Snyder	Oct. 3, 1939
2,218,166	Gerber	Oct. 15, 1940
2,241,862	Langille	May 13, 1941
2,253,997	Becker	Aug. 26, 1941
2,322,223	Coss	June 22, 1943

FOREIGN PATENTS

Number	Country	Date
111,866	Australia	Nov. 4, 1940
598,919	Great Britain	Mar. 1, 1948