July 28, 1953 G. MONGAR 2,646,634

ADJUSTABLE IRONING BOARD

Filed Jan. 30, 1950 2 Sheets-Sheet 1

Fig. 1

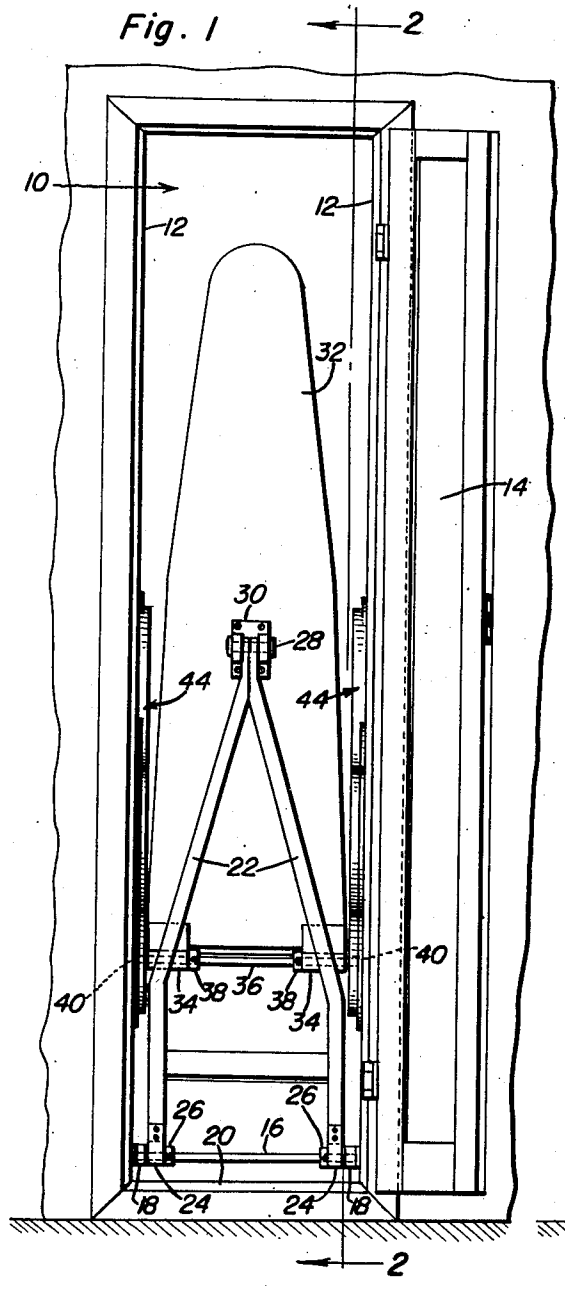

Fig. 2

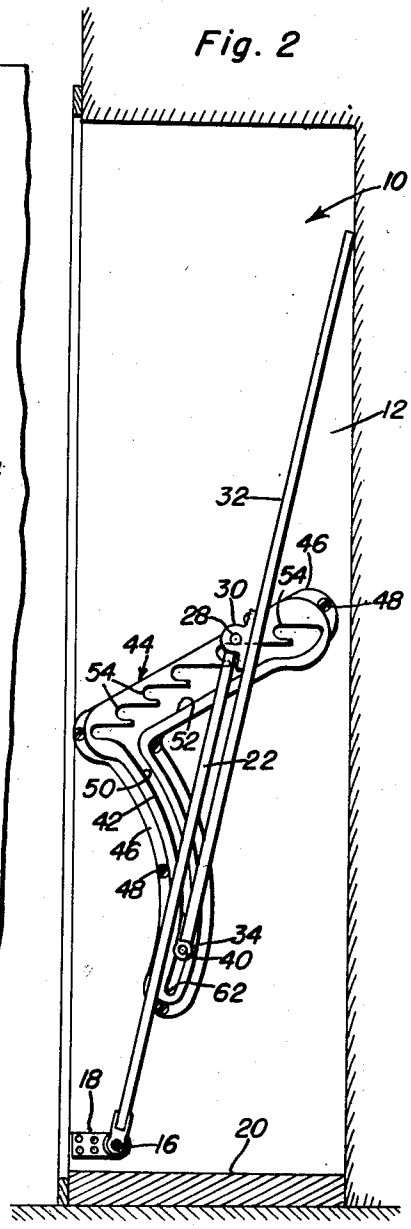

George Mongar
INVENTOR.

BY Thomas A. O'Brien and Harvey B. Jacobson
Attorneys

July 28, 1953 G. MONGAR 2,646,634

ADJUSTABLE IRONING BOARD

Filed Jan. 30, 1950 2 Sheets-Sheet 2

Fig. 3

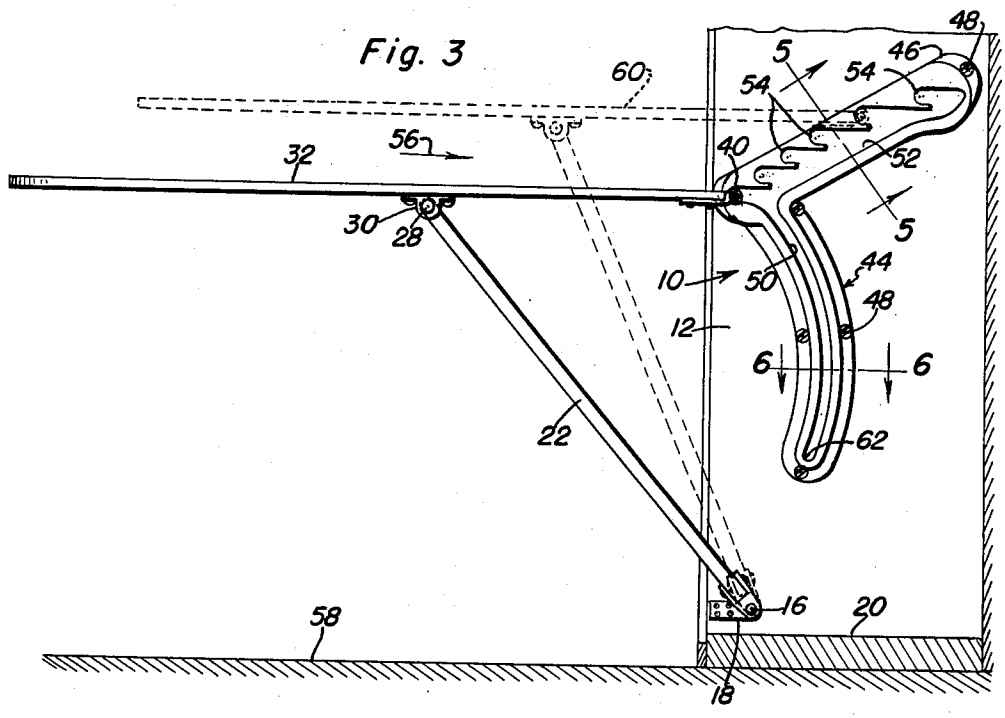

Fig. 5

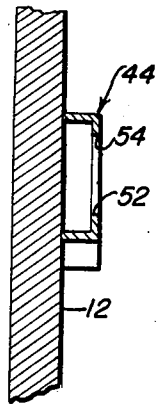

Fig. 4

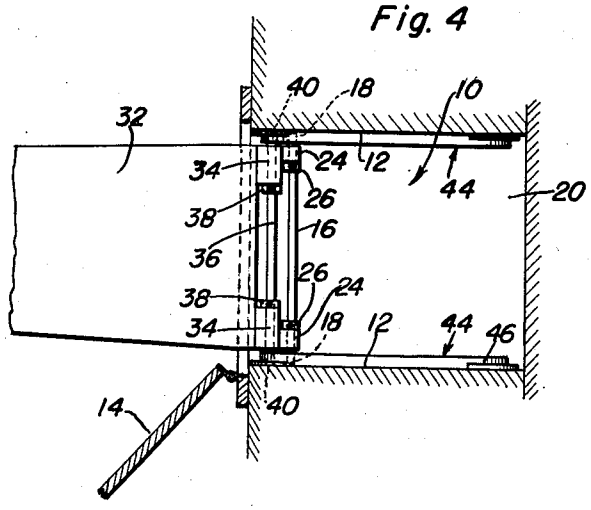

Fig. 6

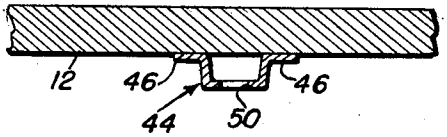

George Mongar

INVENTOR.

BY Clarence A. O'Brien and Harvey B. Jacobson

Attorneys

Patented July 28, 1953

2,646,634

UNITED STATES PATENT OFFICE

2,646,634

ADJUSTABLE IRONING BOARD

George Mongar, Missoula, Mont.

Application January 30, 1950, Serial No. 141,286

1 Claim. (Cl. 38—127)

1

This invention relates to new and useful improvements and structural refinements in ironing boards, and the principal object of the invention is to provide an ironing board which may not only be easily and conveniently folded for storage when it is not in use, but which may also be readily adjusted as to height above the floor.

This object is achieved by the provision of an ironing board which is adapted to be stored in an upwardly extended position in any conventional closet, the folding means being combined with means for adjusting the height of the board when it is projected from the closet to a horizontal, operative position.

Although the invention is primarily intended to serve as an ironing board, it may also be used as a foldable and adjustable table, shelf, or the like.

Some of the advantages of the invention reside in its simplicity of construction, in its efficient and expeditious operation, and in its adaptability to economical manufacture.

With the above more important objects and features in view and such other objects and features as may become apparent as this specification proceeds, the invention consists essentially in the arrangement and construction of parts as illustrated in the accompanying drawings, in which:

Figure 1 is an elevational view of a closet showing the invention in its folded position therein;

Figure 2 is a sectional view, taken substantially in the plane of the line 2—2 in Figure 1;

Figure 3 is a fragmentary sectional view, similar to that shown in Figure 2, but illustrating the invention in its operative position;

Figure 4 is a fragmentary sectional view, taken on a horizontal plane, of the subject shown in Figure 3;

Figure 5 is a sectional detail, taken substantially in the plane of the line 5—5 in Figure 3; and

Figure 6 is a sectional detail, taken substantially in the plane of line 6—6 in Figure 3.

Like characters of reference are employed to designate like parts in the specification and throughout the several views.

Referring now to the accompanying drawings in detail, the general reference character 10 designates a storage compartment such as a built-in closet, or the like, this being vertically elongated and including a pair of spaced, opposing side walls 12, while a door 14 is provided on the closet in accordance with conventional practice.

2

A transversely extending fulcrum shaft 16 is mounted in suitable bearing brackets 18 affixed to the side walls 12 of the closet or compartment 10, the shaft 16 being disposed adjacent the floor or bottom 20 of the compartment and adjacent the door opening, and a brace 22, consisting of a pair of divergent side pieces, has the divergent extremities thereof provided with bearings 24 which are positioned on the shaft 16 between the bearing brackets 18 and a pair of collars 26 affixed to the shaft. The convergent end of the brace 22 is pivotally connected by a pin 28 to a bracket 30 which is secured to the under side of an intermediate portion of a board 32, the rear or inner end of this board being equipped with a pair of coaxial bearings 34 to accommodate a transverse rod 36.

A pair of collars 38 are affixed to the rod 36 to prevent the latter from sliding in the bearings 34, and it is to be noted that end portions of the rod 36 project outwardly or laterally from the bearings 34 and constitute what may be referred to as guiding elements or trunnions 40.

The two trunnions or guiding elements 40 are slidable in a pair of opposing slots 42 provided in respective guiding members which are designated generally by the reference character 44, the members 44 being secured in opposing relation to the respective side walls 12 of the compartment 10.

As is best shown in Figures 2, 3 and 6, each of the members 44 is provided with outturned flanges 46 to receive suitable fastening elements 48 for mounting the same on the side walls of the compartment, an intermediate portion of each guiding member, that is, a portion between the flanges 46, being offset and provided with the slot 42 to receive the trunnions on the board 32 with sufficient clearance to prevent any rubbing or scraping of the trunnions on the compartment walls.

The guiding members 44 are preferably configurated as is clearly shown in Figures 2 and 3, it being noted that the slot 42 of each guiding member has an arcuate, upwardly extending lower portion 50 which is in communication at the upper end thereof with a rearwardly or inwardly inclined upper portion 52, the upper longitudinal edge of the latter being provided with a plurality of forwardly or outwardly extending notches constituting a plurality of seats 54.

When the invention is placed in use, the trunnions 40 of the rod 36 on the board 32 may be positioned selectively in the several seats 54 of the upper slot portions 52, this being so arranged

that the brace **22** supports the board **32** in a substantially horizontal position while projecting outwardly from the compartment **10**, as indicated in Figure 3. Moreover, by simply pushing the board **32** inwardly, as indicated at **56**, so as to disengage the trunnions **40** from one set of notches and sliding the trunnions in the slot portions **52** to engage the trunnions with another set of notches or seats, the height of the board **32** above the floor **58** may be varied as desired, as exemplified by the phantom lines **60**.

When the use of the board **32** is not desired, the trunnions **40** may be disengaged from the notches or seats **54** and may be slid downwardly through the slot portions **52** to the lower ends **62** of the slot portions **50**, under which circumstances the board **32** will be disposed in an upwardly extending position in the compartment **10** to permit closing of the door **14**.

It is believed that the advantages and use of the invention will be readily understood from the foregoing disclosure, and accordingly, further description thereof at this point is deemed unnecessary.

Having described the invention, what is claimed as new is:

An ironing board of the character described comprising a closet open at its front and including spaced side walls, a pair of opposed guides mounted on said side walls, said guides having rearwardly and upwardly inclined slots therein and further having a series of horizontally elongated, forwardly extending notches in the upper longitudinal walls of the slots, an elongated board, a transverse shaft on one end of said board having its end portions operable in the slots and engageable selectively in the notches for shiftably and pivotally mounting the board in the closet, and a brace having one end pivotally mounted on the side walls below the guides and swingable in a vertical plane through the horizontal planes of all of the notches, said brace having its free end pivotally secured to the board at an intermediate point for supporting said board in a horizontal plane when the shaft is engaged in any of the notches.

GEORGE MONGAR.

References Cited in the file of this patent

UNITED STATES PATENTS

Number	Name	Date
1,480,817	Dixon	Jan. 15, 1924
1,886,983	Soucie	Nov. 8, 1932
2,157,675	Rieter	May 9, 1939