No. 705,932. Patented July 29, 1902.

E. L. KENNEDY.

COMBINED VISE, DRILL, AND BOLT HOLDER.

(Application filed Mar. 18, 1902.)

(No Model.) 2 Sheets—Sheet 1.

Fig. 1.

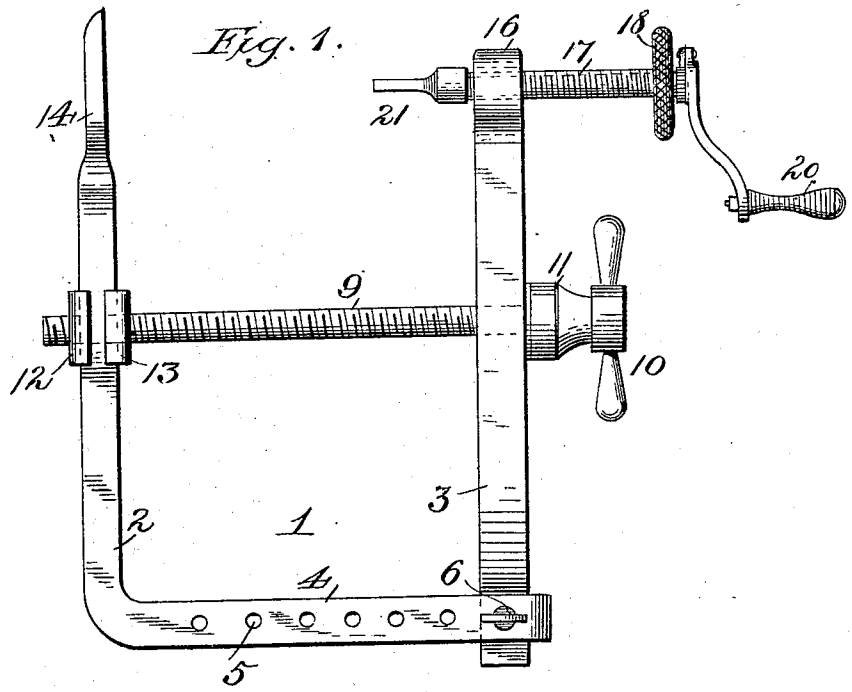

Fig. 2

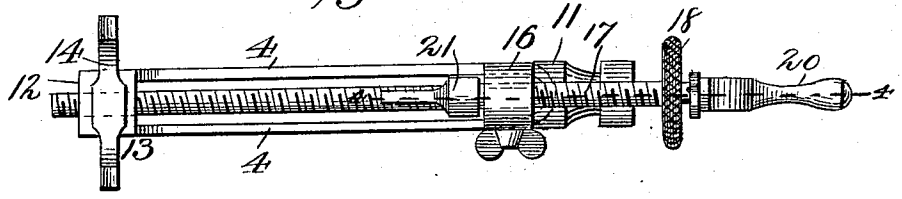

Fig. 4

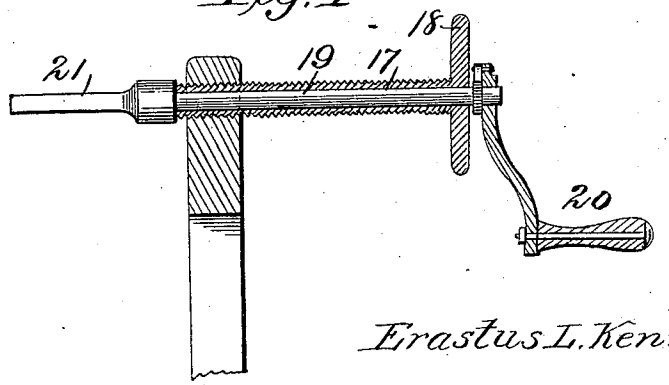

Inventor
Erastus L. Kennedy.

Witnesses
F. L. Durand.
[illegible]

By H. B. Wilson & Co
Attorneys

THE NORRIS PETERS CO., PHOTO-LITHO., WASHINGTON, D. C.

No. 705,932. Patented July 29, 1902.

E. L. KENNEDY.

COMBINED VISE, DRILL, AND BOLT HOLDER.

(Application filed Mar. 18, 1902.)

(No Model.) 2 Sheets—Sheet 2.

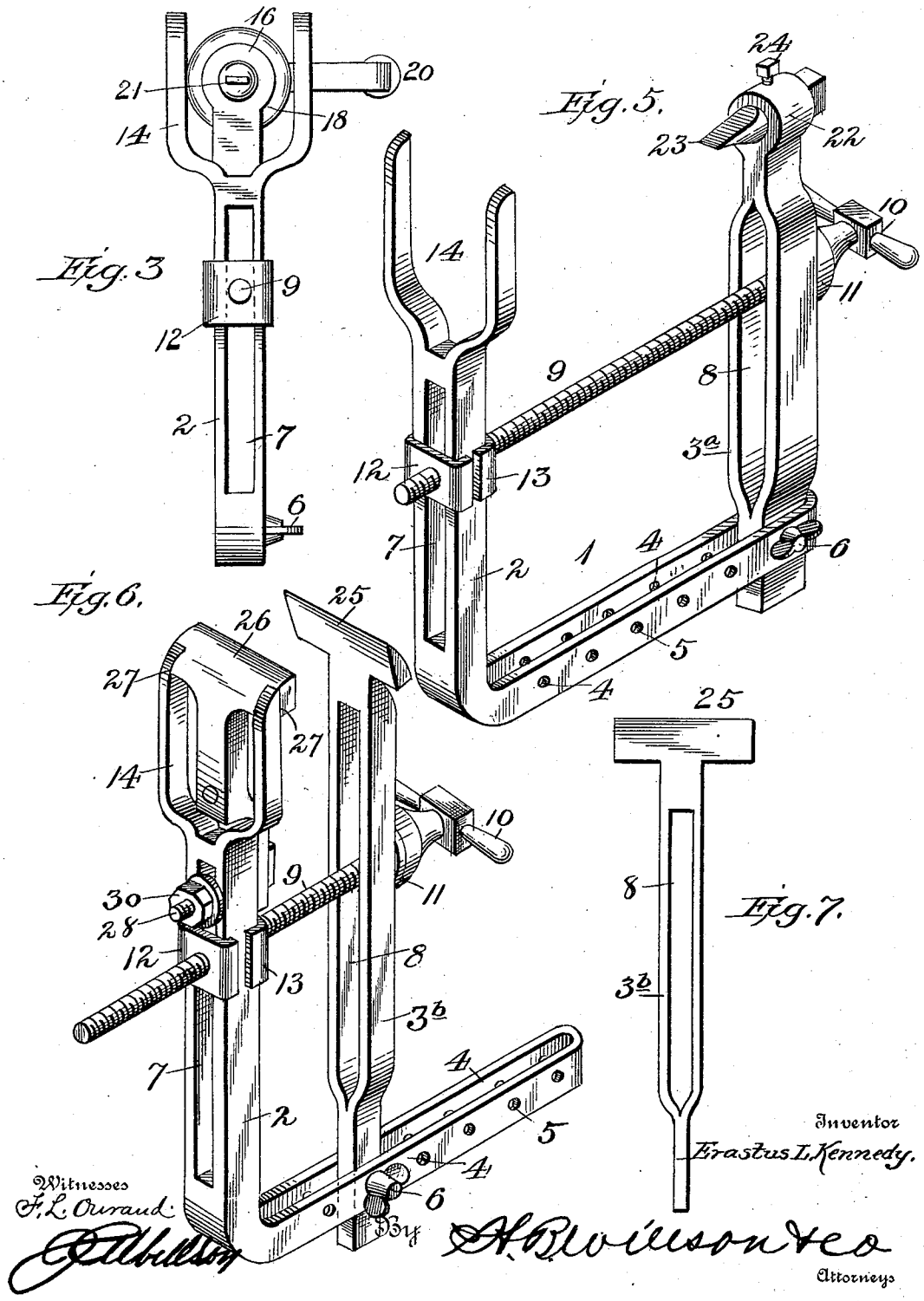

Witnesses
F. L. Ourand
[signature]

Inventor
Erastus L. Kennedy.

By H. B. Willson & Co
Attorneys

THE NORRIS PETERS CO., PHOTO-LITHO., WASHINGTON, D. C.

UNITED STATES PATENT OFFICE.

ERASTUS L. KENNEDY, OF HIGHPOINT, NORTH CAROLINA, ASSIGNOR OF ONE-HALF TO J. E. MERIDITH, OF DAVIDSON COUNTY, NORTH CAROLINA.

COMBINED VISE, DRILL, AND BOLT-HOLDER.

SPECIFICATION forming part of Letters Patent No. 705,932, dated July 29, 1902.

Application filed March 18, 1902. Serial No. 98,812. (No model.)

To all whom it may concern:

Be it known that I, ERASTUS L. KENNEDY, a citizen of the United States, residing at Highpoint, in the county of Guilford and State of North Carolina, have invented certain new and useful Improvements in a Combined Vise, Drill, and Bolt-Holder; and I do declare the following to be a full, clear, and exact description of the invention, such as will enable others skilled in the art to which it appertains to make and use the same.

This invention relates to a novel and improved combination tool or implement—viz., a combined vise, drill, and bolt-holder.

The object of the invention is to provide a combination-tool of this character which shall be simple of construction, durable and efficient in use, comparatively inexpensive of production, and susceptible of quick adjustment to subserve the purpose of a vise, drill, or bolt holder at will.

With this and other objects in view, which will readily appear as the nature of the invention is better understood, the same consists in certain novel features of construction and combination and arrangement of parts, which will be hereinafter fully described, defined in the appended claims, and illustrated in the accompanying drawings, in which—

Figures 1, 2, and 3 represent a side elevation, top plan view, and end elevation of the device as adapted for use as a drill. Fig. 4 is a section through the bearing-sleeve, drill-shaft, and hollow screw-shaft on line 4 4 of Fig. 2. Fig. 5 is a perspective view of the device as adapted for use as a bolt-holder. Fig. 6 is a similar view of the device as adapted for use as a vise. Fig. 7 is a detail view of the removable jaw of the vise.

Referring now more particularly to Figs. 1 to 4, inclusive, of the drawings, the numeral 1 represents the frame of the tool, which comprises a stationary vertical arm 2 and a vertical adjustable and removable arm 3, the said arm 3 being adjustably fitted at its lower end in a longitudinally-slotted horizontal support 4, projecting from and at right angles to the lower end of the arm 2. The sides of this support 4 are provided with alined rows of apertures 5 to receive a thumb screw or bolt 6, which passes through a threaded opening in the arm 3, whereby said arm is removably secured to the support 4 and rendered adjustable toward and from the arm 2.

The arms 2 and 3 are formed with longitudinal slots 7 and 8, through which projects an adjusting-screw 9, provided at one end with an operating-handle 10 and a head 11, which head 11 bears against the outer side of the arm 3. The opposite end of the screw 9 works in threaded openings in flanged plates or clips 12 13, arranged on opposite sides of the arm 2 and embracing the same. When the screw is turned in one direction or the other, the arm 3 will be moved toward or from the arm 2 and will swing upon the bolt 6 as a pivot. The adjustable connection of the arm 3 permits of said arm being quickly set a greater or less distance from the arm 2 to admit a large or small object between the arms to obtain an approximate adjustment, the exact adjustment being secured by means of the screw 9. The said screw 9 is also vertically adjustable in the slots 7 and 8 to admit different depths or lengths of objects between the arms.

The arm 2 has a forked or bifurcated upper end 14, while the arm 3 is provided at its upper end with a threaded sleeve 16. In this sleeve turns a hollow screw-shaft 17, provided at its outer end with an operating head or hand-wheel 18, and in said shaft 17 is revolubly mounted a shaft 19, carrying at its outer end a crank or ratchet handle 20 and at its inner end a drill 21. By this construction it will be seen that when the object to be drilled is fitted between the arms and rested against the fork 14 the arm 3 may be adjusted to bring the point of the drill against said object and that then by turning the crank-handle 20 the drill will be operated. The drill is fed up as it cuts its way through the object by turning the feed-screw 17. The point of the drill on passing through the object is not injured as it comes into the space between the two arms of the fork 14.

The fork 14 may be made to straddle a wheel-spoke and serve as a centering device, so that

a hole may be drilled through the tire and felly in line with the center of the spoke for the insertion of a nail or fastening.

In adapting the device for use as a bolt-holder the arm 3 is removed and a similar form of arm 3^a substituted therefor, as shown in Fig. 5. This arm 3^a has a sleeve or socket 22 at its upper end to receive a screw-driver, cold-chisel, or edged bit 23, which is held secured within the sleeve by a set-screw 24. The construction is otherwise the same. In using this device the bit 23 is brought to bear against the head of the bolt and may be struck to cut a notch in the bolt-head to prevent the bolt from turning while the nut thereon is being removed by means of a wrench inserted between the arms of the fork 14.

In adapting the device for use as a vise a third removable arm 3^b is used in place of arm 3 or 3^a, and this arm 3^b is provided at its upper end with a jaw 25, which coöperates with a jaw 26, adapted to be applied to the jaw 2. As shown, the jaw 26 is T-shaped and is formed in its head with seats or recesses 27 to receive the free ends of the arms of the fork, whereby it is fitted thereon, and the stem or shank of the jaw is secured to the arm 2 by a suitable fastening, as by a bolt 28, passing through the slot 7 and held by a nut 30. The operation with this form of the invention will be clearly understood.

It will be seen that the invention provides a combination-tool which may be furnished at a comparatively low cost and which will be found of great use and convenience in many lines of work.

Various changes in the form, proportion, and the minor details of construction may be resorted to without departing from the principle or sacrificing any of the advantages of this invention.

Having thus described the invention, what I claim as new, and desire to secure by Letters Patent, is—

1. In a device of the character described, the combination of stationary and movable arms each having a longitudinal slot, and a screw for adjusting the movable arm, said screw being adjustable in said slots, substantially as specified.

2. In a device of the character described, the combination of two arms, one of which is provided with a right angular support, means detachably connecting the other arm to said support, and means for adjusting the detachable arm toward and from the other arm, said means being longitudinally adjustable upon the arms, substantially as set forth.

In testimony whereof I have hereunto set my hand in presence of two subscribing witnesses.

ERASTUS L. KENNEDY.

Witnesses:
W. P. RAGAN,
J. E. FRALEY.