Jan. 14, 1964 C. B. WATTS, JR 3,118,118

VARIABLE WAVEGUIDE

Filed May 27, 1960 2 Sheets-Sheet 1

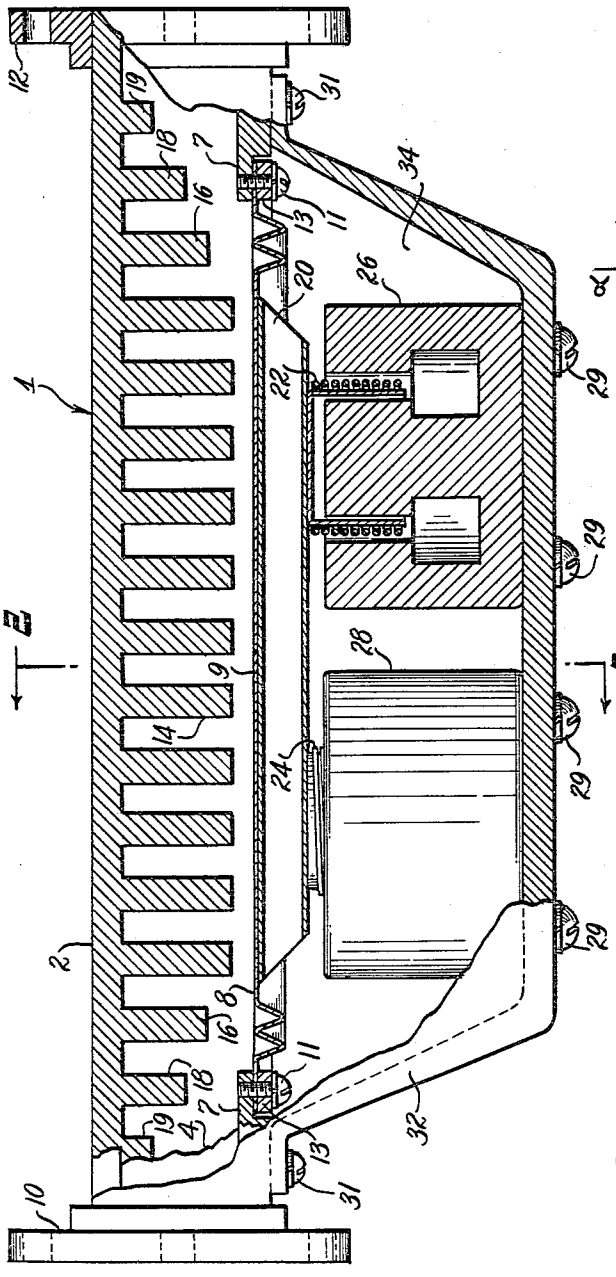

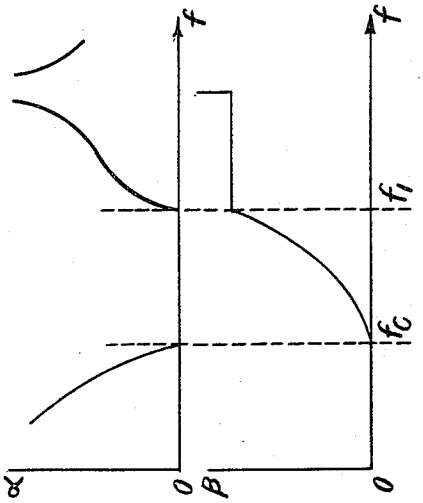

FIG. 3.

FIG. 1.

INVENTOR.
Chester B. Watts, Jr.
BY
Bacon & Thomas
ATTORNEYS

Jan. 14, 1964 C. B. WATTS, JR 3,118,118

VARIABLE WAVEGUIDE

Filed May 27, 1960 2 Sheets-Sheet 2

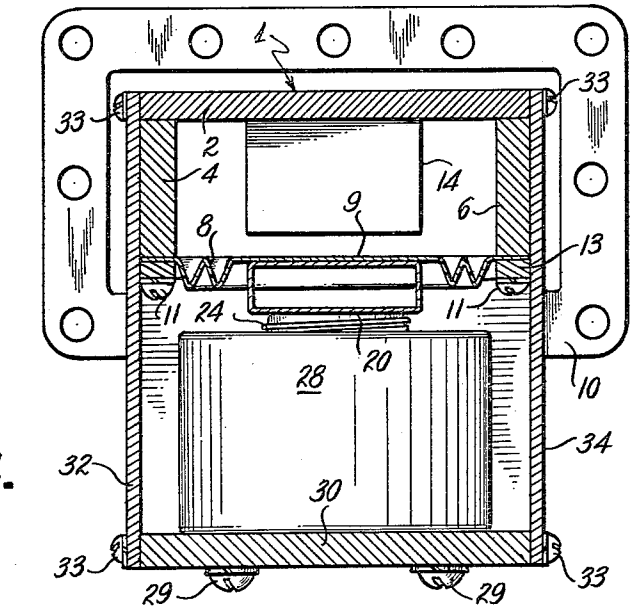

Fig. 2.

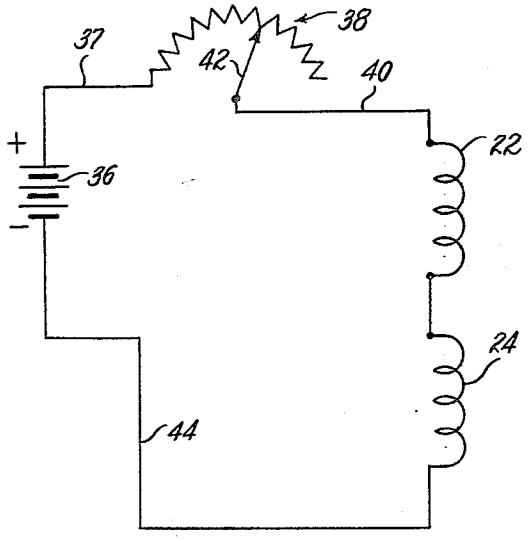

Fig. 4.

INVENTOR.
Chester B. Watts, Jr.
BY
Bacon & Thomas
ATTORNEYS

United States Patent Office 3,118,118 Patented Jan. 14, 1964

3,118,118
VARIABLE WAVEGUIDE

Chester B. Watts, Jr., Alexandria, Va., assignor to Scanwell Laboratories, Inc., Springfield, Va., a corporation of Virginia

Filed May 27, 1960, Ser. No. 32,393
3 Claims. (Cl. 333—31)

This invention relates to the transmission of radio-frequency or microwave energy in waveguides, and more specifically to the rapid control of the phase or the amplitude of the field associated with such energy.

It is sometimes desirable, in microwave systems, to be able, in response to a control signal, to change the RF phase of a signal in a waveguide without at the same time causing appreciable amplitude change. This has been done in a number of different ways by devices known customarily as variable phase-shifters. It is ordinarily possible to classify such devices either as electro-mechanical or as non-mechanical in nature. The electro-mechanical types are characterized by relatively high stability and good linearity but usually respond rather slowly to a control signal.

It is an object of this invention to provide an electro-mechanical type of variable phase-shifter wherein the required mechanical motion is small and the mass of the moving part is also small, thereby permitting relatively rapid response to a control signal.

Another object of this invention is to provide an adjustable band-pass wave filter wherein the required mechanical motion is small and the mass of the moving part is also small, thereby permitting rapid variation of the cut-off frequencies in response to a control signal.

An embodiment of this invention provides a length of wave-guide of rectangular cross section wherein one wall carries a series of inward projections. The opposite wall of the wave-guide is a relatively thin metal diaphragm which is permitted limited transverse motion. Motion is imparted to the diaphragm by one or more driving coils in permanent magnet fields after the fashion of electro-dynamic loud speakers, by a suitable control signal.

FIG. 1 is an elevation view, with parts in section, of a complete device which embodies this invention;

FIG. 2 is a sectional view, taken along the plane 2—2 in FIG. 1;

FIG. 3 is a graph showing typical attenuation and phase characteristics; and

FIG. 4 is a diagrammatic representation of the controlling circuit.

A device which embodies this invention may be described in more detail with refernce to FIGS. 1 and 2, as follows: A waveguide is shown in the form of a pipe 1 of rectangular cross section bounded by three rigid walls 2, 4, 6 and one movable wall in the form of a diaphragm 8. The diaphragm may be secured to the lower edges of the side walls 4 and 6, and to a pair of end members 7, by a series of screws 11 passing through aligned holes in a ring 13 and through the end members 7 and side walls 4 and 6. End flanges 10 and 12 are provided for joining this device with other waveguide components. The top wall 2 carries a periodic delaying-structure comprising a number of parallel finlike projections 14. At the ends, projections 16, 18, and 19 have progressively reduced height to provide a less abrupt impedance transition into the periodic delay-structure. A stiff, lightweight beam is cemented, spot-welded or otherwise suitably fastened to the movable portion 9 of the diaphragm 8. A pair of driving coils 22 and 24 are similarly fastened to the bottom wall of the beam 20, and are supported in the gaps between the poles of a pair of field magnets 26 and 28. The latter are fastened by screws 29 to the base

bracket 30 having legs on the ends thereof fastened by screws 31 to the end members 7. Dust-covers 32 and 34 close the sides of the device. The dust-covers are fastened to the rigid wall 2 and to the base bracket 30 by a series of screws 33.

It is well known [1, 2] that a waveguide containing a periodic delay-structure of the type described has a band-pass transmission characteristic, illustrated typically in FIG. 3. The symbols used in FIG. 3 may be defined as follows:

α=attenuation component of transmission
β=phase component of transmission
f=applied frequency
f_c=lower cut-off frequency
f_1=upper cut-off frequency

The pass band of interest lies between the frequencies f_c and f_1, which are functions of various dimensions of the structure. In this device, one of these dimensions is made variable, namely, the gap between diaphragm 8, which is the bottom wall of the waveguide, and the bottom ends of projections 14 which form the periodic delay-structure. If the gap is reduced by an upward displacement of diaphragm 8, the result is that the pass band is moved lower in frequency. This is accompanied by a corresponding increase in phase-shift at any given operating frequency within the pass band. The device thus functions as a variable phase-shifter in response to displacement of diaphragm 8. Displacement is produced by the forces resulting from interaction of control currents applied to the coils 22 and 24 with the fields of permanent magnets 26 and 28.

The possibility of achieving very quick response in this device may be explained as follows: It will be readily understood that the undamped natural period of the movable mechanical system is given simply by the formula

$$T=2\pi\sqrt{\frac{m}{k}}$$

wherein

T=the undamped natural period
m=the total mass of the moving parts
k=the total spring stiffness constant of the diaphragm.

The total mass, m is made up of the driving coils 22 and 24, the stiffener beam 20, and the movable portion 9 of the diaphragm 8. These parts can be designed to have relatively low mass, thus contributing to a small value of natural period T. The spring stiffness, k, may be defined as follows

$$k=\frac{f}{x}=\frac{BLi}{x}$$

wherein

f=the force applied by the driving coils
x=the displacement of the diaphragm
B=magnetic flux density
L=length of wire in the driver coil windings
i=coil current.

By suitable choice of the other diamensions of the waveguide delay-structure, the distance, x, traveled by the movable portion of the diaphragm may be made arbitrarily small to achieve a desired phase variation. Making this displacement small contributes to a relatively large value for the diaphragm stiffness, k. The coil force, f, is made relatively large through the use of field magnets

[1] Radio Research Laboratory Staff, "Very High-Frequency Techniques," McGraw-Hill Book Co., New York, N.Y., Section 27—28; 1947.
[2] S. B. Cohn, "Design Relations for the Wide-Band Waveguide Filter," Proc. I.R.E., vol. 38, p. 799; July, 1950.

of high flux density, B, and coil current, *i*, as large as compatible with heating and mechanical limitations. These factors also contribute to a larger value for the diaphragm stiffness, *k*, thus further reducing the natural period, T.

FIGURE 4 is a diagrammatic representation of a control circuit, including a source of D.C. electrical energy, such as a battery 36, a conductor 37 to a variable rheostat 38, a conductor 40 from the movable arm 42 of the rheostat to the driving coils 22 and 24 which may be connected in series, and a conductor 44 to the negative terminal of the battery 36. Operation of the movable arm 42 of the variable rheostat is effective to vary the amount of electrical current passing through the driving coils 22 and 24 and consequently vary the position of the movable portion 9 of the diaphragm 8 relative to the projections 14. If desired, a conventional reversing switch can be added to control the direction of movement of the driving coils 22 and 24 in an obvious manner.

While, in the illustrated embodiment, the movable flexible wall 8 is disposed opposite the wall 2 carrying the projections 14, it should be understood that the device would operate the accomplish the same results if the wall 8 were rigid and one or both of the walls 4 and 6 were flexible.

The device has been described from the standpoint of rapid phase control. However, the fact that the device has a movable band-pass characteristic implies that it can be used also as an amplitude modulator or as a high speed switch by varying a cut-off frequency from a point above to a point below a chosen band of signal frequencies.

While a single specific embodiment of the invention has been shown and described herein, it is to be understood that other forms may be resorted to within the scope of the appended claims.

I claim:

1. A variable waveguide comprising, a tube having three rigid electrical conducting walls and one flexible electrical conducting wall section, one of said rigid conducting walls having a series of internal projections, said flexible wall section being sealed around its entire periphery to said tube, driving means including at least one coil, fixed on the outer side of said wall section and arranged to impart parallel in and out motion to at least the principal central portion of said wall section and non-parallel in and out motion to the minor non-central portion of said wall section, said coil being in the flux field of a permanent magnet mounted on the outside of said tube, and means for supplying a signal current to said coil.

2. A variable waveguide as defined in claim 1 wherein said flexible wall section comprises a thin and generally flat member secured throughout its periphery to said rigid walls, and corrugations extending around said flat member adjacent but inwardly of its periphery, stiffening means secured to said member inwardly of said corrugations said driving coil being secured to said flat member inwardly of said corrugations.

3. A variable waveguide as defined in claim 2 wherein said stiffening means is secured to said member on the outer surface thereof, there being at least two of said coils symmetrically arranged on said stiffening means, said means for supplying a signal current being arranged to supply signal current to both said coils in the same phase.

References Cited in the file of this patent

UNITED STATES PATENTS

2,238,117	Koch	Apr. 15, 1941
2,474,688	Please	June 28, 1949
2,567,748	White	Sept. 11, 1951
2,577,146	Norton	Dec. 4, 1951
2,697,209	Sichak	Dec. 14, 1954
2,708,236	Pierce	May 10, 1955
2,734,171	Heins	Feb. 7, 1956
2,825,841	Convert	Mar. 4, 1958
2,892,157	Schlandsker	June 23, 1959

OTHER REFERENCES

Article: Green, Corrugated-Waveguide Band-Pass Filters, Electronics 24: 117–119, July 1951.