June 14, 1932. C. A. ARCHBOLD 1,863,037

PLIERS

Filed Aug. 18, 1930

Fig. 1.

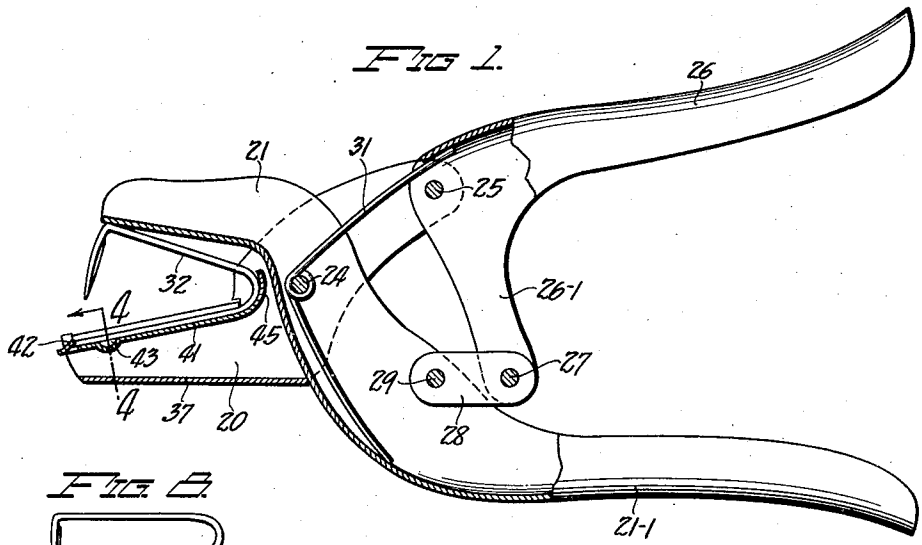

Fig. 2.

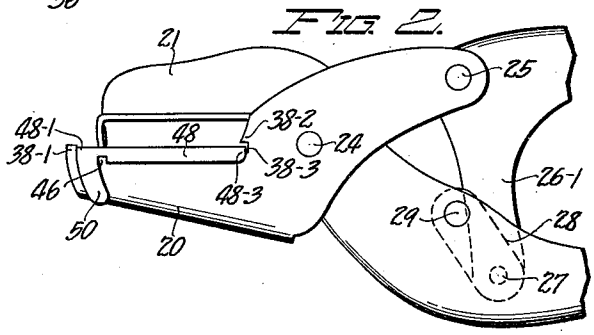

Fig. 3.

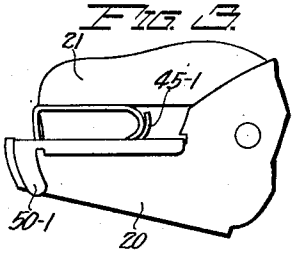

Fig. 4.

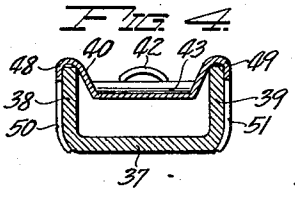

Fig. 7.

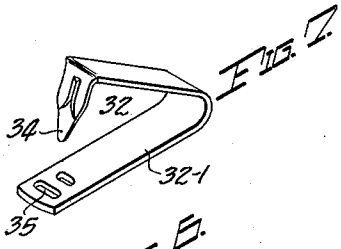

Fig. 5.

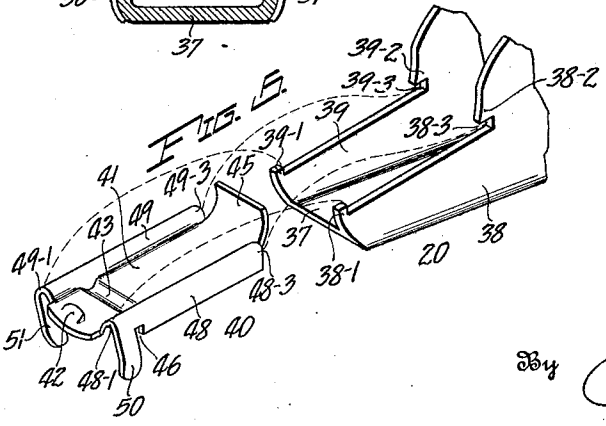

Fig. 6.

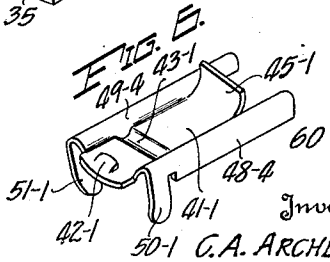

Inventor
C. A. ARCHBOLD,

By F. Mellinckrodt.
Attorney

Patented June 14, 1932 1,863,037

UNITED STATES PATENT OFFICE

CHARLES A. ARCHBOLD, OF SALT LAKE CITY, UTAH, ASSIGNOR TO SALT LAKE STAMP COMPANY, OF SALT LAKE CITY, UTAH, A CORPORATION OF UTAH

PLIERS

Application filed August 18, 1930. Serial No. 475,865.

This invention relates to pliers, and more particularly to pliers of the type used in attaching metal tags to the ears of domestic animals of various kinds, for identification.

The principal objects of the invention are:

First. To provide the jaws of ear tag pliers with properly shaped removable portions, so that one pair of pliers may be used for attaching a number of different sizes or styles of tags.

Second. To make the removable portions of the jaws in the form of conveniently interchangeable inserts or cradles, having different stops and engaging portions to accommodate different ear tags, and operating as forming dies.

Third. To be simple and efficient in operation.

Fourth. To be inexpensive.

Metal ear tags are in common use for marking domestic animals, such as cattle, sheep and hogs, these tags being of various sizes and styles. Heretofore, it has been the custom to use a separate pair of pliers for each size or style, but by means of the present invention, it is necessary to incur the expense of only one pair of pliers, while the inserts or cradles can be furnished at trifling cost.

As the description progresses, it will become clear that the invention could be used for pliers other than ear tag pliers and include removable jaw portions for a variety of purposes.

The features of this invention for which the protection of Letters Patent of the United States is desired, are collectively grouped in the claims concluding this specification.

In the drawings, which illustrates one embodiment of my improved ear tag pliers,

Fig. 1 represents a side elevation, partly in section, taken along the vertical center plane, the jaws being open;

Fig. 2 a fragmentary side elevation showing parts located in foreground of Fig. 1, the jaws being closed;

Fig. 3 still another fragmentary side elevation, showing a different insert or cradle to accommodate a tag of smaller size than that shown in Figs. 1 and 2;

Fig. 4 a section taken on line 4—4, Fig. 1, drawn to an enlarged scale, omitting the tag;

Fig. 5 a fragmentary view, in exploded perspective, showing one of the interchangeable inserts or cradles and the jaw which accommodates the same;

Fig. 6 a perspective view, showing individually, the cradle indicated in Fig. 3;

Fig. 7 a perspective view of an ear tag, open, ready for fastening by means of the pliers; and

Fig. 8 a side elevation of the tag after having been operated on by the pliers;

Referring to the drawing, the pliers may consist of jaws 20 and 21, pivotally connected to each other at 24. The jaw 21 may be integral with the handle 21—1, while the jaw 20 may be pivoted at 25 to a handle 26, the latter having a bellcrank composition in conjunction with arms 26—1. These arms may be pivoted at 27 to the link 28, which in turn may be pivoted at 29, to the handle 21—1. The handles 21—1 and 26 may be yieldably held in an open position, Fig. 1, by means of a double-acting spring 31. In compressing the handles, a powerful compound squeezing action is exerted by the jaw.

Ear tags for identifying animals are usually supplied to the user in the form illustrated at 32 in Figs. 1 and 7.

In applying such a tag to an animal, the tag is squeezed together, whereby a sharp point 34 pierces the ear, and passes through a hole 35 in the lower blade 32—1, the point being curled up or clinched on the under side of the blade 32—1, as indicated at 36, Fig. 8.

So far as the tag and the manner of applying it are concerned, there is nothing new in the present invention. The novelty resides in what will now be described.

Instead of forming the jaw 20 in the usual manner, I provide preferably a bottom portion 37, having the upstanding side walls 38 and 39. Extending across these walls, is an insert or cradle 40, removably held in place in the jaw by means of the forwardly positioned projections 38—1 and 39—1, and the rearwardly positioned overhanging projections 38—2 and 39—2 which latter partially define notches 38—3 and 39—3, all the pro-

jections being preferably integral with the respective walls.

Cradle 40 preferably has the side channels 48 and 49, forming integral parts thereof, and being adapted when the cradle is slipped into place in the jaws, to have the rearward portions 48—3 and 49—3 enter the notches 38—3 and 39—3 respectively. At the same time, the forward portions 48—1 and 49—1, respectively, sink into place adjacent, and behind the projections 38—1 and 39—1. Furthermore, fingers 50 and 51, which depend from the outer flanges of channels 48 and 49 respectively engage the sides 38 and 39, finally gripping the same in the engaged positions shown in Figs. 2, 3 and 4.

The cradle is preferably made of sheet spring steel, tempered, which allows the fingers 50 and 51 to slip down over the respective walls of the jaw and firmly grip the same without fatigue. The side channels 48 and 49 may be joined by a bed portion 41, this being provided with the usual front stop 42, tag clinching groove 43, and rear stop 45, common to ear tag pliers. Notches 46 may be formed between the fingers 50 and 51 and the respective outside depending flanges of channels 48 and 49, these notches being provided to give a freer spring action to the fingers.

The cradle 40 shown in Fig. 5 is designed for one certain size of tag, while the cradle 60 shown in Fig 6, is for another size tag, a smaller one, as previously touched upon herein. The spring fingers 50—1 and 51—1, and channels 48—4 and 49—4, with their related parts of cradle 60, are similar to the respective parts of cradle 40, and may be interchangeably inserted in the jaw 20. It will be noted, however, that the portion 41—1, together with the parts 42—1 and 45—1 of cradle 60 are different from the corresponding parts of cradle 40, and that still other cradles, having the desired modifications, may be substituted, it being remembered of course, that fingers corresponding to 50, and portions similar to the engaging portions of channels 48, are required to be present so as to interchangeably engage any particular jaw for which the cradles are designed

Grooves 43 and 43—1 may be called "clinching wells" and together with parts such as 41, 42, 45 and so on, serve as ear tag forming or shaping portions, since they are instrumental in giving final form to the ear tags.

Comprehending the purpose of this invention makes it obvious that in its broad aspect, it might be applied in modified forms to tools other than ear tag pliers.

Ear tag pliers are usually formed of plate metal stampings, which makes the use of the present invention particularly advantageous.

When operating on ear tags with the present pliers, the tags are held in place in the jaws from front to back, by stops 42 and 45, while in the sidewise directions, the tags are held by the side channels 48 and 49 which act as side stops.

Ear tags are often made of sheet or strip steel and it therefore becomes a matter of utility as well as novelty, to make the removable cradles of tool or spring steel. These are the principal forming parts of the jaws and are subject to the greatest amount of wear in closing and clinching steel tags.

For the sake of economy, ear tag pliers are made of soft sheet steel, and to use tool or spring steel for the entire plier structure would entail a prohibitive expense. In the soft steel structure, operation on steel tags soon wears out the jaws. Therefore, the cradle, which is characteristic of the present invention and forms such a small part of the pliers, makes it possible to use the more expensive material at the place where it is really needed.

While a specific embodiment of this invention is herein disclosed, it is to be understood that various modifications can readily be made without departing from the spirit of the invention as defined in the following claims.

Having fully described my invention, what I claim is:

1. Pliers, including in combination, a jaw having forwardly disposed upstanding portions, rearwardly disposed notched portions, and a cradle removably positioned in said engaging portions so that one end of the cradle is positioned in said notches and the other end of the cradle is positioned immediately back of said upstanding portions.

2. Pliers having a jaw, said jaw including in combination a notched portion at one end thereof, an upstanding portion at the other end thereof, and any one of a certain plurality of removable inserts, all of said removable inserts interchangeably fitting into the notched portion and back of the upstanding portion of said jaw, but various individuals of said plurality having varying engaging portions for holding ear tags differing from one another, said individuals also having clinching wells variously positioned so as to be operative in the process of clinching the corresponding ear tags.

3. Pliers, including in combination, a jaw having side walls spaced apart from each other, and an insert for said jaw; said insert having side channel portions spaced apart from each other to correspond to the spacing of said side walls, each channel portion being disposed to straddle the respective side wall, and means whereby said insert is held in position on said side walls.

4. Pliers, including in combination, a jaw having side walls spaced apart from each other, overhanging portions at least par-

tially defining notches at one end of the side walls, upstanding portions at the other end of said side walls, and an insert for said jaw; said insert having inverted channel portions spaced apart from each other to correspond to the spacing of said side walls, each channel portion being disposed to straddle the respective side wall, to have one end thereof positoned in one of said notches and to have the other end thereof positioned adjacent one of said upstanding portions.

5. Pliers, including in combination, a jaw portion and an insert for said jaw portion; said insert comprising two channels spaced apart from each other, a bed extending from the inner flange of one channel to the inner flange of the other channel, and means for holding said insert in position in said jaw portion.

6. An insert for plier jaws and the like, said insert including in combination, two channels spaced apart from each other, and a bed extending from the inner flange of one channel to the inner flange of the other channel, said bed being provided with article forming portions.

7. An insert for plier jaws and the like, said insert including in combination, two channels spaced apart from each other, and a bed extending from the inner flange of one channel to the inner flange of the other channel, said bed being disposed to receive an ear tag and having a front stop, a rear stop, and a clinching well between said stops.

8. An insert for plier jaws and the like, said insert including in combination, two channels spaced apart from each other, and a bed extending from the inner flange of one channel to the inner flange of the other channel, said bed being disposed to receive an ear tag, and having its rear portion detached from said inner flanges and upturned to form a rear stop for said ear tag.

9. Pliers, including in combination, a jaw having side walls spaced apart from each other, and an insert for said jaw; said insert having side channel portions spaced apart from each other to correspond to the spacing of said side walls, each channel portion being disposed to straddle the respective side wall, and spring fingers depending from the outer flanges of said channels, said fingers engaging said jaw.

10. Pliers, including in combination, a jaw portion and an insert for said jaw portion; said insert comprising two channels spaced apart from each other, a bed extending from the inner flange of one channel to the inner flange of the other channel, and spring fingers, depending from the outer flanges of said channels, said fingers engaging said jaw.

In testimony whereof, I sign my name hereto.

CHARLES A. ARCHBOLD.