No. 657,656. Patented Sept. 11, 1900.

A. HEINE.

ATTRITION MILL.

(Application filed Mar. 21, 1899.)

(No Model.)

Fig. 1.

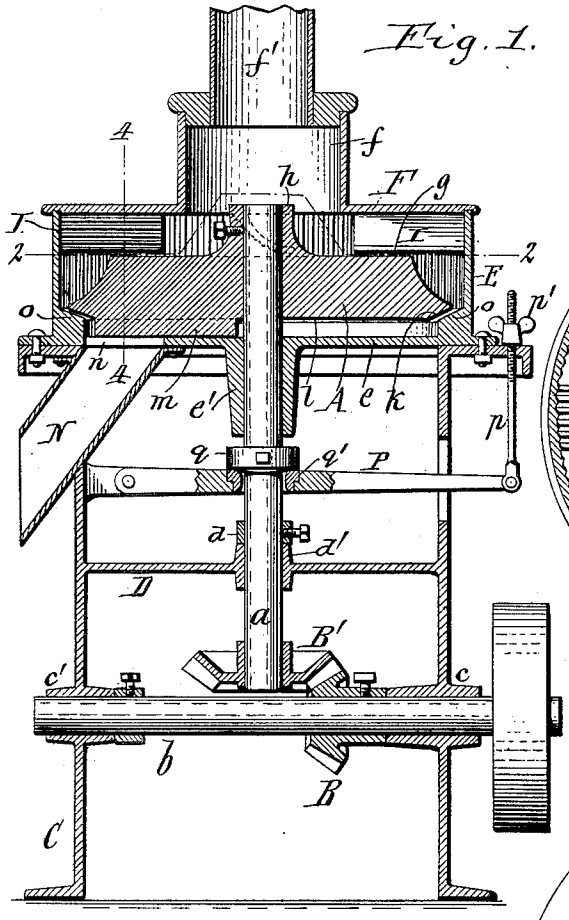

Fig. 2.

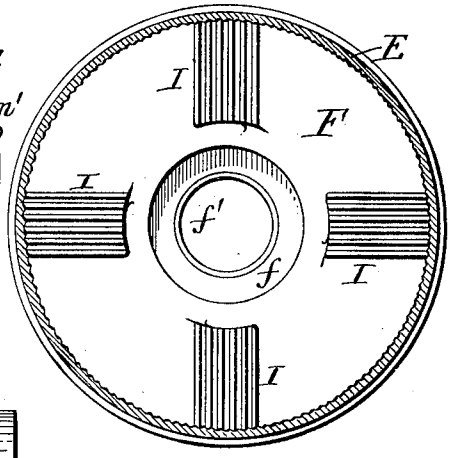

Fig. 3.

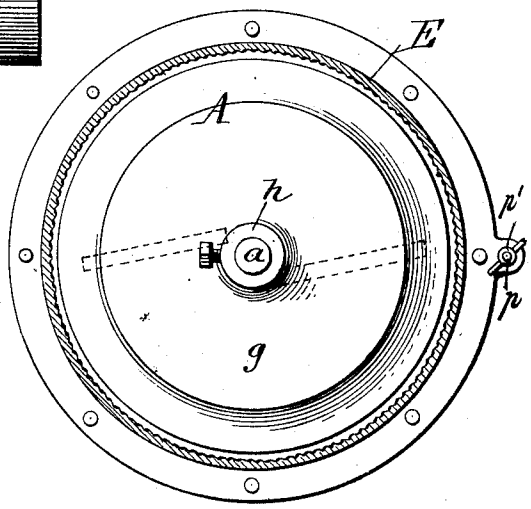

Fig. 4.

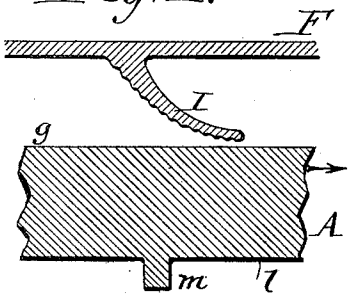

Henry L. Deck.
Chas. F. Burkhart. } Witnesses.

August Heine Inventor
By Wilhelm Pommer
Attorneys

UNITED STATES PATENT OFFICE.

AUGUST HEINE, OF SILVER CREEK, NEW YORK, ASSIGNOR TO MARY L. ALLEN, OF SAME PLACE.

ATTRITION-MILL.

SPECIFICATION forming part of Letters Patent No. 657,656, dated September 11, 1900.

Application filed March 21, 1899. Serial No. 709,999. (No model.)

To all whom it may concern:

Be it known that I, AUGUST HEINE, a citizen of the United States, residing at Silver Creek, in the county of Chautauqua and State of New York, have invented new and useful Improvements in Attrition-Mills, of which the following is a specification.

This invention relates to a machine which is more particularly designed for reducing middlings which are so small that they cannot be further reduced satisfactorily by grinding-rolls. In order to perform this operation satisfactorily, it is necessary that the parts which operate upon the material should pulverize or reduce only the middlings, while the bran and germ particles, which are mixed with or adhere to the middlings, should substantially retain their size, so that they can be afterward separated from the flour-producing parts by bolting or sifting. When grinding-rolls are set so closely together as to pulverize these small middlings, they also reduce the bran and germ particles, and this renders the reduction of such middlings unsatisfactory. Several different machines have heretofore been produced for performing this operation by an action which is mainly one of attrition instead of grinding; and my invention has the object to produce such a machine which is simple in construction and effective in operation.

In the accompanying drawings, Figure 1 is a sectional elevation of my improved attrition-mill. Fig. 2 is a horizontal section in line 2 2, Fig. 1, looking upward and showing the under side of the top of the inclosing casing. Fig. 3 is a similar view looking downward and showing the disk of the mill. Fig. 4 is a fragmentary vertical section in line 4 4, Fig. 1, on an enlarged scale.

Like letters of reference refer to like parts in the several figures.

A represents the horizontal disk of the machine, which is secured to the upper end of a spindle *a*, driven at its lower end by any suitable means—for instance, from a horizontal driving-shaft *b* by a pair of bevel-wheels B B′.

C is the stationary frame of the machine, in which the driving-shaft and the spindle are supported in any suitable manner. As shown in the drawings, the driving-shaft is journaled in bearings *c c′* in the lower part of the frame, and the spindle rests by a collar *d* upon a bearing *d′*, formed in a bridge-piece D.

E represents a cylindrical casing which surrounds the disk A and which is secured by its bottom plate *e* upon the frame C. This bottom plate is provided with a depending central bearing *e′*, in which the upper portion of the spindle is journaled.

F represents the horizontal top plate of the casing, which is provided with a raised central feed-chamber *f*, to which the middlings are supplied by a feed-spout *f′*.

The top *g* of the disk is flat, with the exception of its raised hub *h*, by which it is secured to the spindle. The upper peripheral face of the disk slopes or inclines outwardly or toward the surrounding casing E, forming a downwardly-converging annular space between this face of the disk and the casing. The flat top of the disk is arranged at some distance below the top plate F, and this latter is provided with several depending wings I, which extend nearly to the top surface of the disk. These wings are curved or inclined in the direction in which the disk rotates, as indicated by the arrow in Fig. 4, and extend from the casing E inwardly over the flat top surface of the disk. The lower peripheral face *k* of the disk slopes inwardly or toward the axis of the disk and is much shorter than the upper outwardly-sloping face, while the bottom side *l* of the disk is flat and provided with downwardly-projecting scrapers or sweeps *m*, by which the finished material is swept from the bottom plate *e* of the casing to the discharge-opening *n*, which is formed in said plate and leads to the discharge-spout N.

The bottom plate *e* of the casing is provided on the inner side of the peripheral wall E of the casing with an annular rim, shoulder, or enlargement *o*. This internal rim or shoulder has its upper face sloping inwardly, like the lower peripheral face *k* of the disk, and arranged underneath said face of the disk, so that a narrow inwardly-inclined annular discharge-passage is formed between these two inclined faces. The height of this passage

is very small, as it is not much larger than the size of the granules of the finished material. In order to regulate the height of this passage as circumstances may require, the disk is made vertically adjustable by any suitable means. As shown in the drawings, the frame is provided for this purpose with an adjustable lever P, which is pivoted at one end to the frame and adjustably supported on the frame at the other end by a screw-rod and nut *p p'*. The spindle is provided above this lever with a collar *q*, which rests upon the lever, the latter being provided with a bearing *q'*, which surrounds the spindle below this collar and upon which the collar rests, when the raising of the lever lifts the lower collar *d* of the spindle from the fixed bearing *d'* of the frame. By raising and lowering the free end of the lever the size of the annular discharge-passage can be nicely adjusted.

The middlings are fed upon the flat upper side of the rotating disk and are thrown outwardly by the latter against the surrounding casing E. The mass of material which is contained within the casing rotates with the disk by frictional contact and is repeatedly driven against the under sides of the wings depending from the cover and squeezed and rubbed in passing through the converging spaces between the wings and the upper side of the disk. The material is further squeezed and rubbed, particle against particle, in the downwardly-converging annular space between the outwardly-sloping upper face of the disk and the casing. During this rotary outward and downward movement of the material in passing over the upper surface of the disk and through the space between the upper peripheral face of the disk to the annular discharge-opening the particles of the material are mainly operated upon by rubbing against each other and against the surfaces of the disk, wings, and casing and are not exposed to a grinding action to any considerable extent. This causes the reduction of the friable flour-producing parts of the middlings, while the particles of bran and germ, which are tough, substantially retain their size. The finished material is finally discharged through the narrow annular discharge-opening between the inclined lower face of the disk and the internal shoulder of the casing and is bolted or sifted. The inward direction of this discharge-opening retards the escape of the material and holds the material longer in the machine than it would otherwise remain, since the flow of the material through this discharge-opening is resisted by the centrifugal action, which must be overcome by the downward pressure upon the material in the space between the upper peripheral face of the disk and the casing. This downward pressure is largely due to the inclined wings of the casing, which deflect the rotating material downwardly.

The under sides of the wings and the inner sides of the casing are preferably corrugated, ribbed, or roughened to cause the particles to turn over and change their respective positions in rotating with the disk.

I claim as my invention—

1. In an attrition-mill, the combination with a rotary horizontal disk having a working top face and a working peripheral face, of a casing which surrounds the peripheral face of the disk and extends inwardly over the top face thereof and which has a feed-opening above the top of the disk and a constricted annular discharge-passage around the disk and below the peripheral face thereof, whereby the escape of the material is retarded by the constricted discharge-passage and the material is subjected to attrition in passing outwardly between the casing and the top of the disk and in passing downwardly between the casing and the peripheral face of the disk, substantially as set forth.

2. In an attrition-mill, the combination with a rotary horizontal disk having a working top face and a working peripheral face, of a casing which surrounds the peripheral face of the disk and extends inwardly over the top face thereof and which has a feed-opening above the top of the disk and a constricted discharge-passage below the peripheral face of the disk, and rubbing-wings arranged in said casing above the disk and approaching the same in the direction of its rotation, substantially as set forth.

3. In an attrition-mill, the combination with a rotary horizontal disk having a working top face and an outwardly-inclined peripheral working face, of a casing which surrounds said peripheral face and forms therewith a downwardly-converging space leading to a constricted discharge-passage below the peripheral face, said casing extending inwardly over the top face of the disk and having a feed-opening above the same, substantially as set forth.

4. In an attrition-mill, the combination with a rotary horizontal disk having a working top face and an outwardly-inclined peripheral working face, of a casing which surrounds said peripheral face and forms therewith a downwardly-converging space leading to a constricted discharge-passage below the peripheral face, said casing extending inwardly over the top face of the disk and having a feed-opening above the same, and deflecting-wings arranged in said casing above the disk and deflecting the material into said downwardly-converging space, substantially as set forth.

5. In an attrition-mill, the combination with a rotary horizontal disk having a working top face and a peripheral working face, of a casing which surrounds said peripheral face and which extends inwardly over said top face and also inwardly along the under side of the disk below the peripheral face thereof, forming an inwardly-opening constricted peripheral discharge-passage below the disk, substantially as set forth.

6. The combination with a rotary disk having an outwardly-inclined upper peripheral face and an inwardly-inclined lower peripheral face, of a surrounding casing having a feed-opening above said disk and having an inwardly-inclined internal shoulder below the lower peripheral face of the disk, forming therewith an inwardly-inclined annular discharge-passage, substantially as set forth.

7. The combination with a rotary disk, having an upper, outwardly-inclined, peripheral face and a lower inwardly-extending face, of a surrounding casing having a feed-opening above said disk and having an internal shoulder below the lower face of the disk, forming therewith a discharge-opening, and rubbing-wings arranged in said casing above said disk and inclined in the direction of the rotation of the disk, substantially as set forth.

Witness my hand this 18th day of March, 1899.

AUGUST HEINE.

Witnesses:
EDWARD WILHELM,
JNO. J. BONNER.