US 20230112441A1

(19) United States
(12) Patent Application Publication
(10) Pub. No.: US 2023/0112441 A1
(43) Pub. Date: Apr. 13, 2023

Tang et al.

(54) **DATA FUSION AND ANALYSIS ENGINE FOR VEHICLE SENSORS**

(71) Applicants: **NEC Laboratories America, Inc.**, Princeton, NJ (US); **NEC Corporation**, Tokyo (JP)

(72) Inventors: **LuAn Tang**, Pennington, NJ (US); **Yuncong Chen**, Plainsboro, NJ (US); **Wei Cheng**, Princeton Junction, NJ (US); **Zhengzhang Chen**, Princeton Junction, NJ (US); **Haifeng Chen**, West Windsor, NJ (US); **Yuji Kobayashi**, Tokyo (JP); **Yuxiang Ren**, Tallahassee, FL (US)

(21) Appl. No.: **17/961,169**

(22) Filed: **Oct. 6, 2022**

Related U.S. Application Data

(60) Provisional application No. 63/253,164, filed on Oct. 7, 2021.

Publication Classification

(51) **Int. Cl.**
B60W 40/09 (2006.01)
G06K 9/62 (2006.01)

(52) **U.S. Cl.**
CPC ***B60W 40/09*** (2013.01); ***G06K 9/6288*** (2013.01); *B60W 2420/42* (2013.01); *B60W 2540/30* (2013.01); *G06N 3/084* (2013.01)

(57) **ABSTRACT**

Systems and methods for data fusion and analysis of vehicle sensor data, including receiving a multiple modality input data stream from a plurality of different types of vehicle sensors, determining latent features by extracting modality-specific features from the input data stream, and aligning a distribution of the latent features of different modalities by feature-level data fusion. Classification probabilities can be determined for the latent features using a fused modality scene classifier. A tree-organized neural network can be trained to determine path probabilities and issue driving pattern judgments, with the tree-organized neural network including a soft tree model and a hard decision leaf. One or more driving pattern judgments can be issued based on a probability of possible driving patterns derived from the modality-specific features.

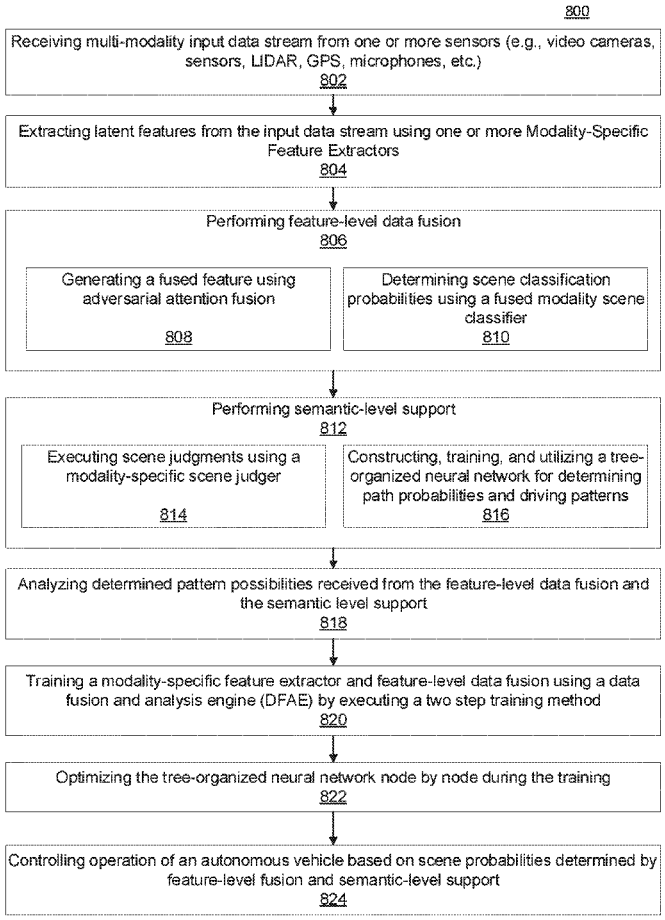

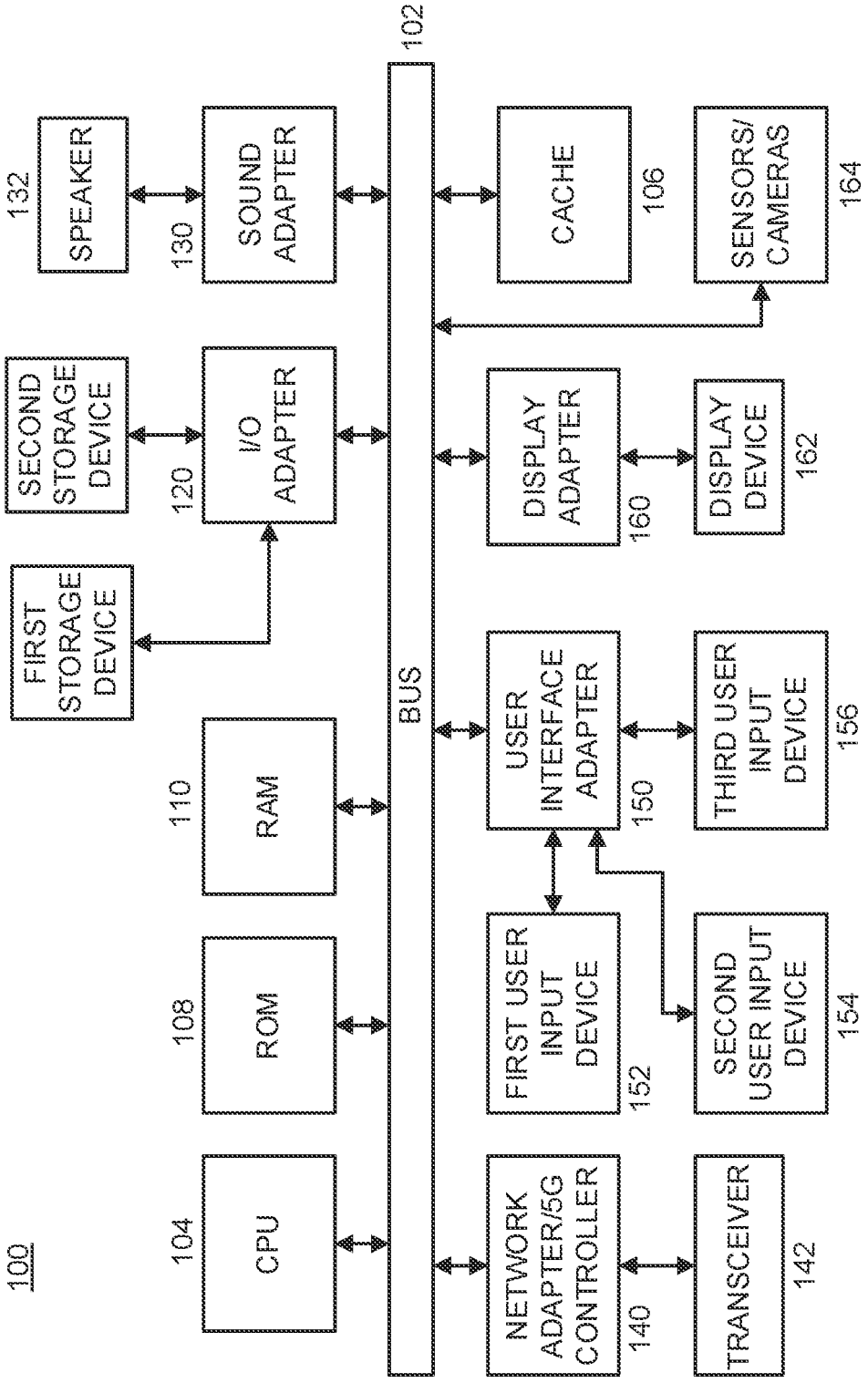
100
CPU
104
ROM
108
RAM
110
FIRST STORAGE DEVICE
122
SECOND STORAGE DEVICE
124
I/O ADAPTER
120
SOUND ADAPTER
130
SPEAKER
132
BUS
102
NETWORK ADAPTER/5G CONTROLLER
140
TRANSCEIVER
142
FIRST USER INPUT DEVICE
152
SECOND USER INPUT DEVICE
154
USER INTERFACE ADAPTER
150
THIRD USER INPUT DEVICE
156
DISPLAY ADAPTER
160
DISPLAY DEVICE
162
CACHE
106
SENSORS/ CAMERAS
164

FIG. 1

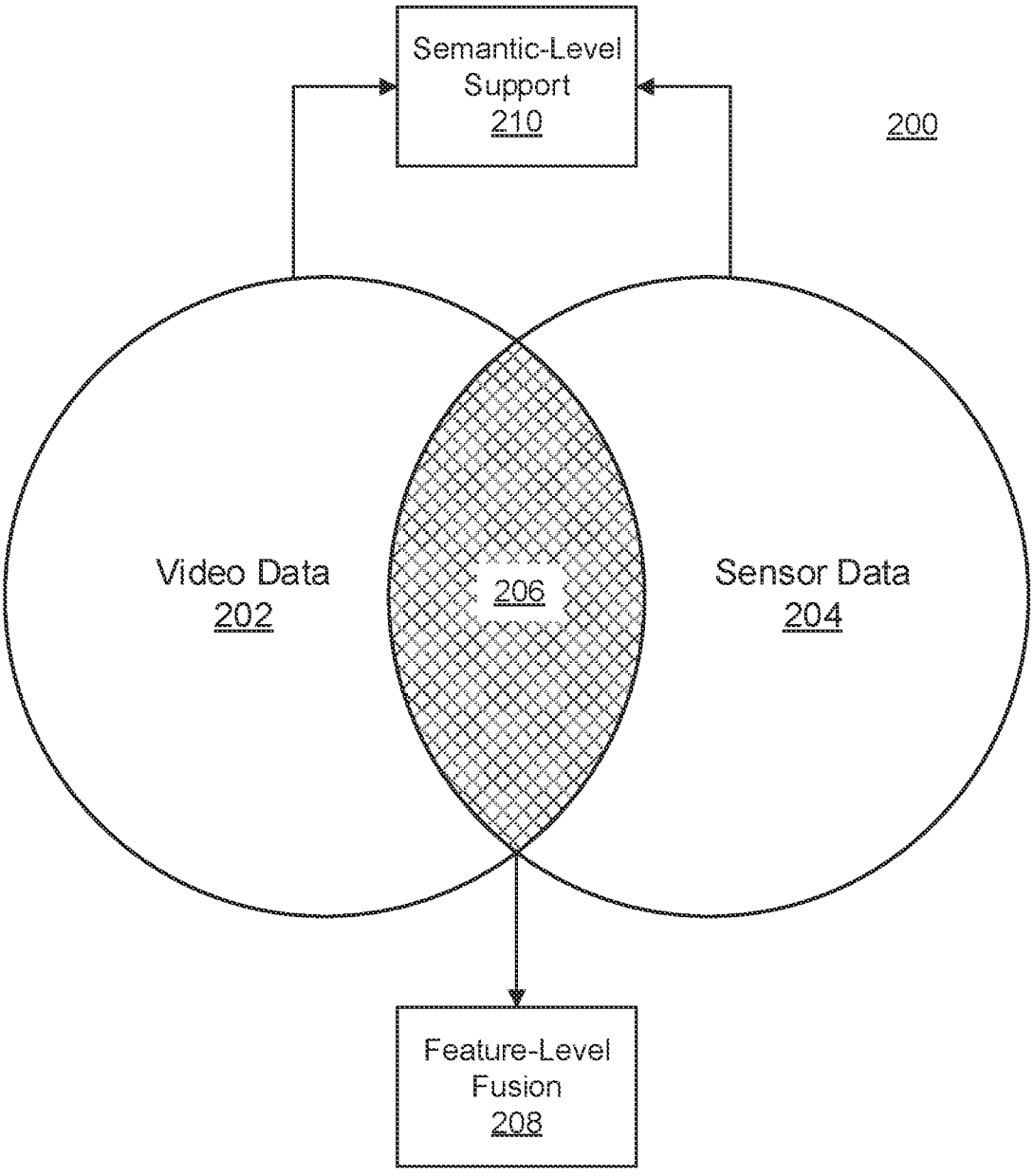
Semantic-Level Support 210
200
Video Data 202
206
Sensor Data 204
Feature-Level Fusion 208

FIG. 2

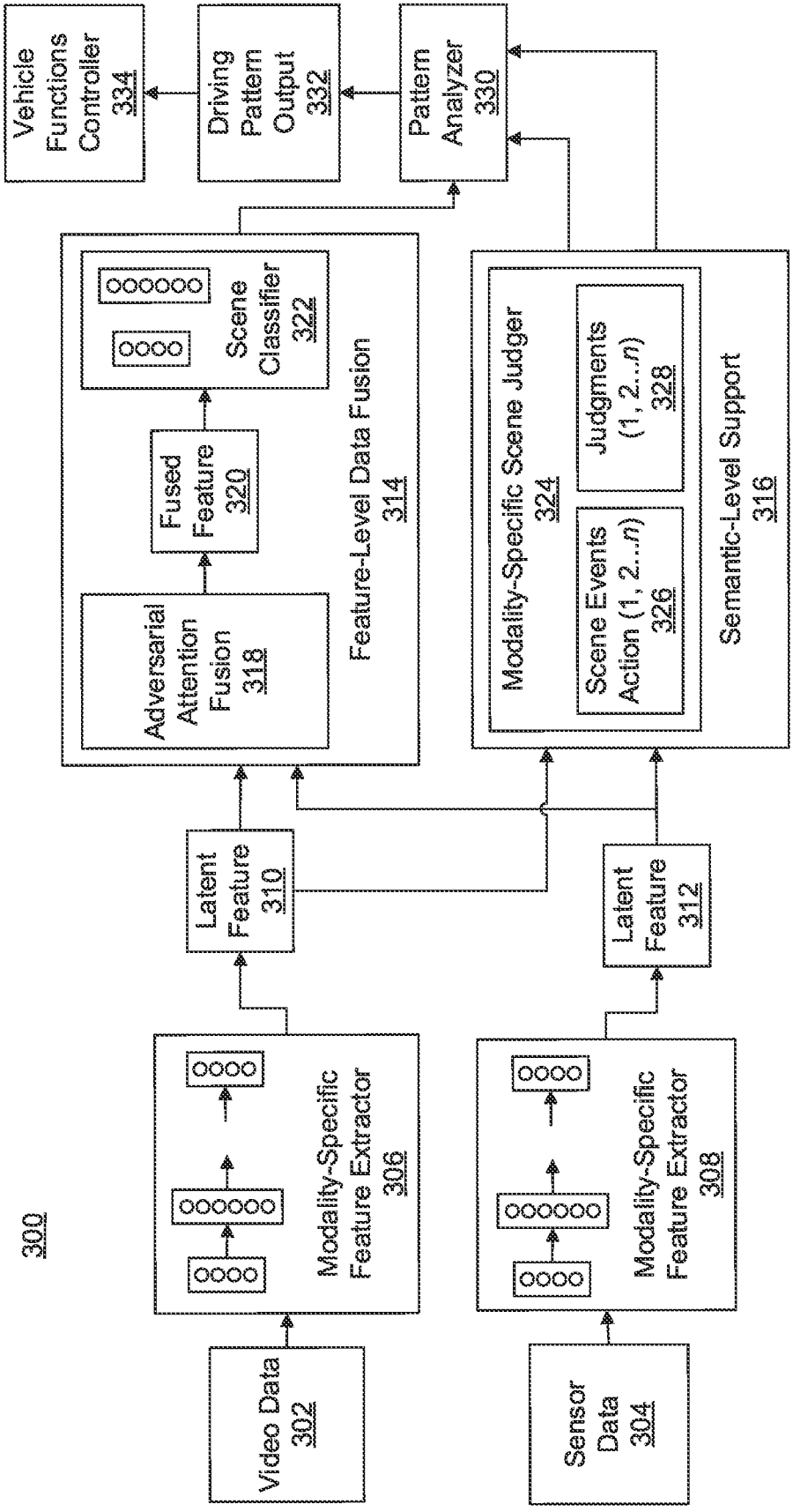
300
Video Data 302
Sensor Data 304
Modality-Specific Feature Extractor 306
Modality-Specific Feature Extractor 308
Latent Feature 310
Latent Feature 312
Feature-Level Data Fusion 314
Adversarial Attention Fusion 318
Fused Feature 320
Scene Classifier 322
Semantic-Level Support 316
Modality-Specific Scene Judger 324
Scene Events Action (1, 2...n) 326
Judgments (1, 2...n) 328
Pattern Analyzer 330
Driving Pattern Output 332
Vehicle Functions Controller 334

FIG. 3

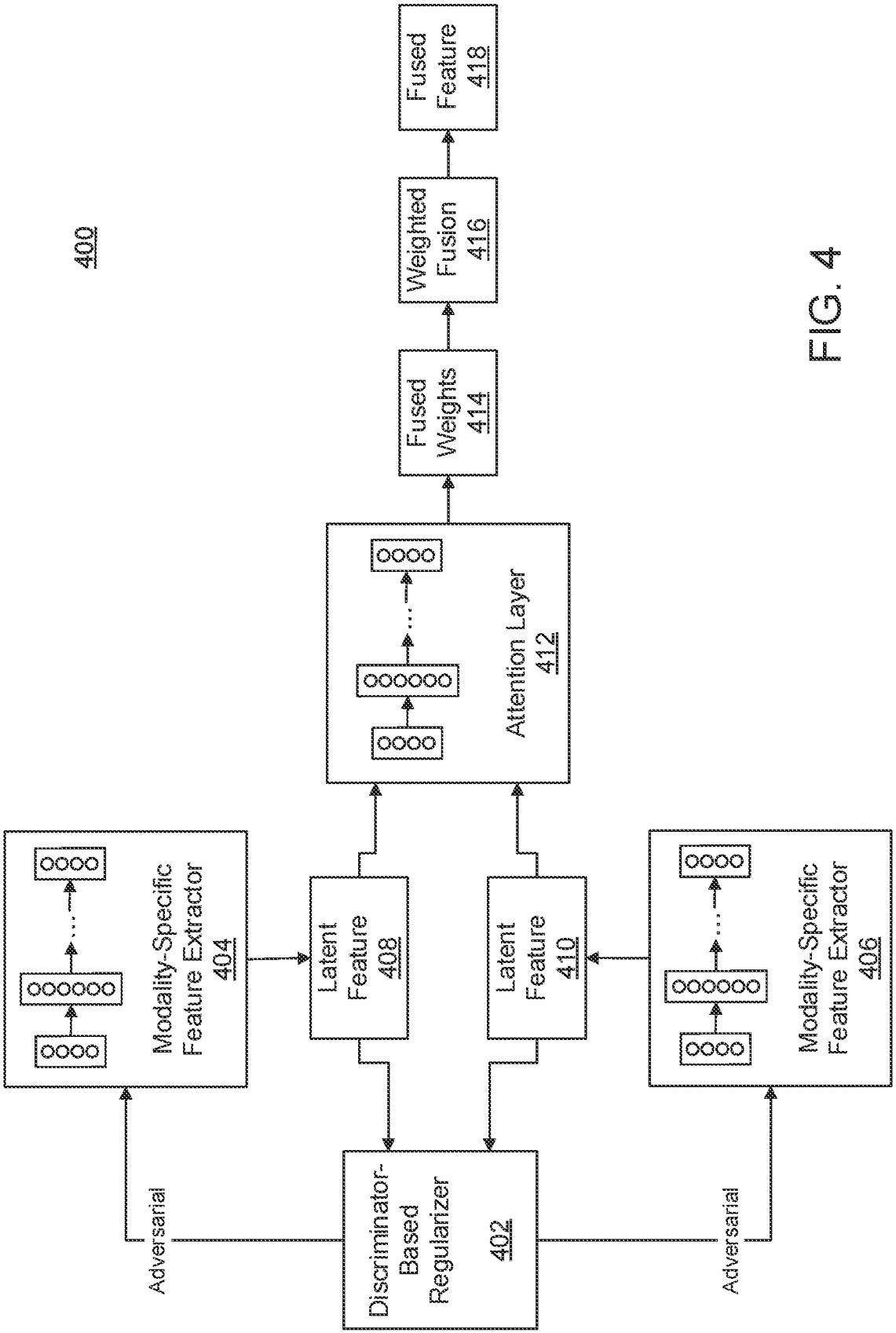
400
Fused Feature 418
Weighted Fusion 416
Fused Weights 414
Attention Layer 412
Modality-Specific Feature Extractor 404
Latent Feature 408
Latent Feature 410
Modality-Specific Feature Extractor 406
Discriminator-Based Regularizer 402
Adversarial
Adversarial

FIG. 4

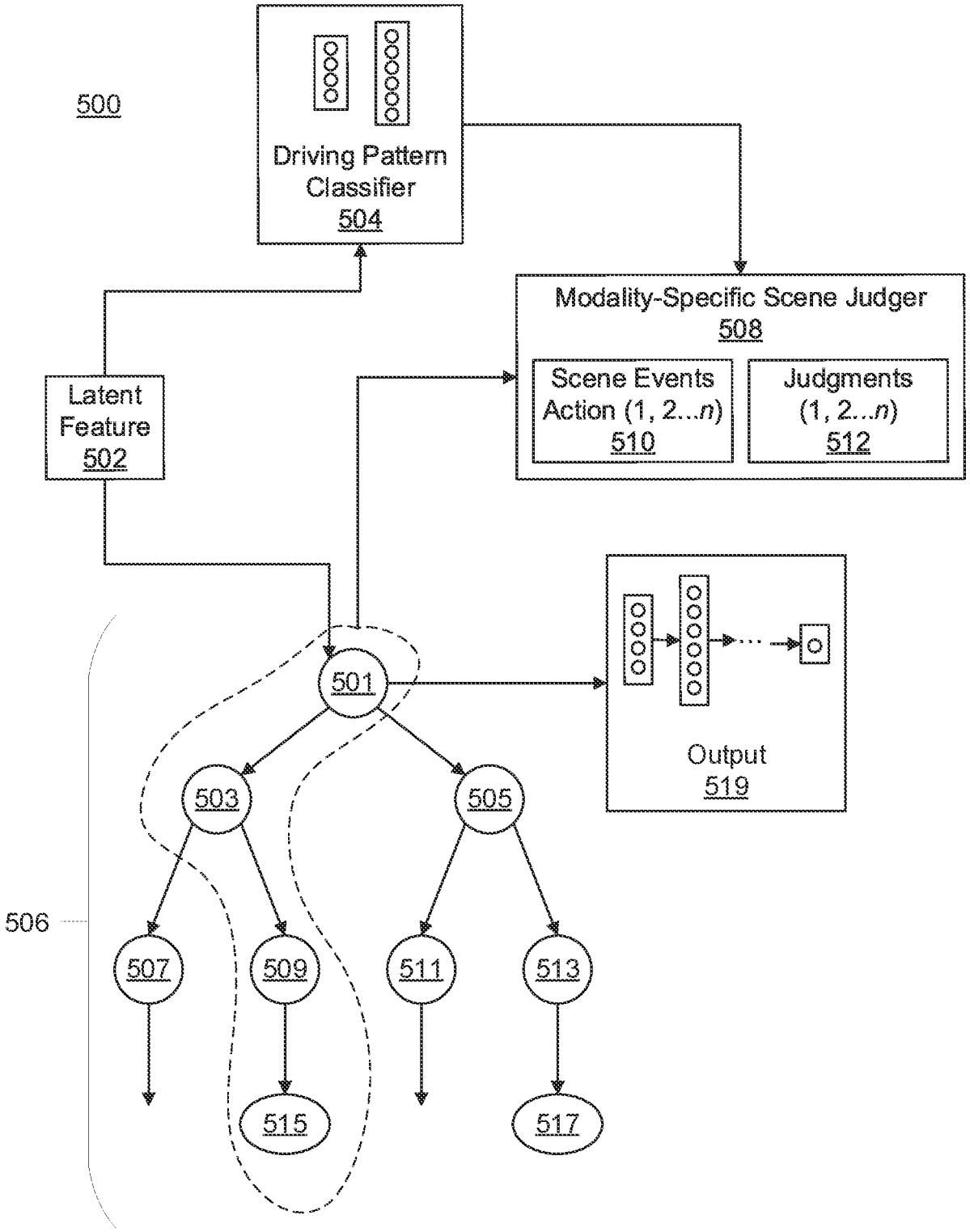
500
Driving Pattern Classifier 504
Modality-Specific Scene Judger 508
Scene Events Action (1, 2...n) 510
Judgments (1, 2...n) 512
Latent Feature 502
Output 519
501
503
505
506
507
509
511
513
515
517

FIG. 5

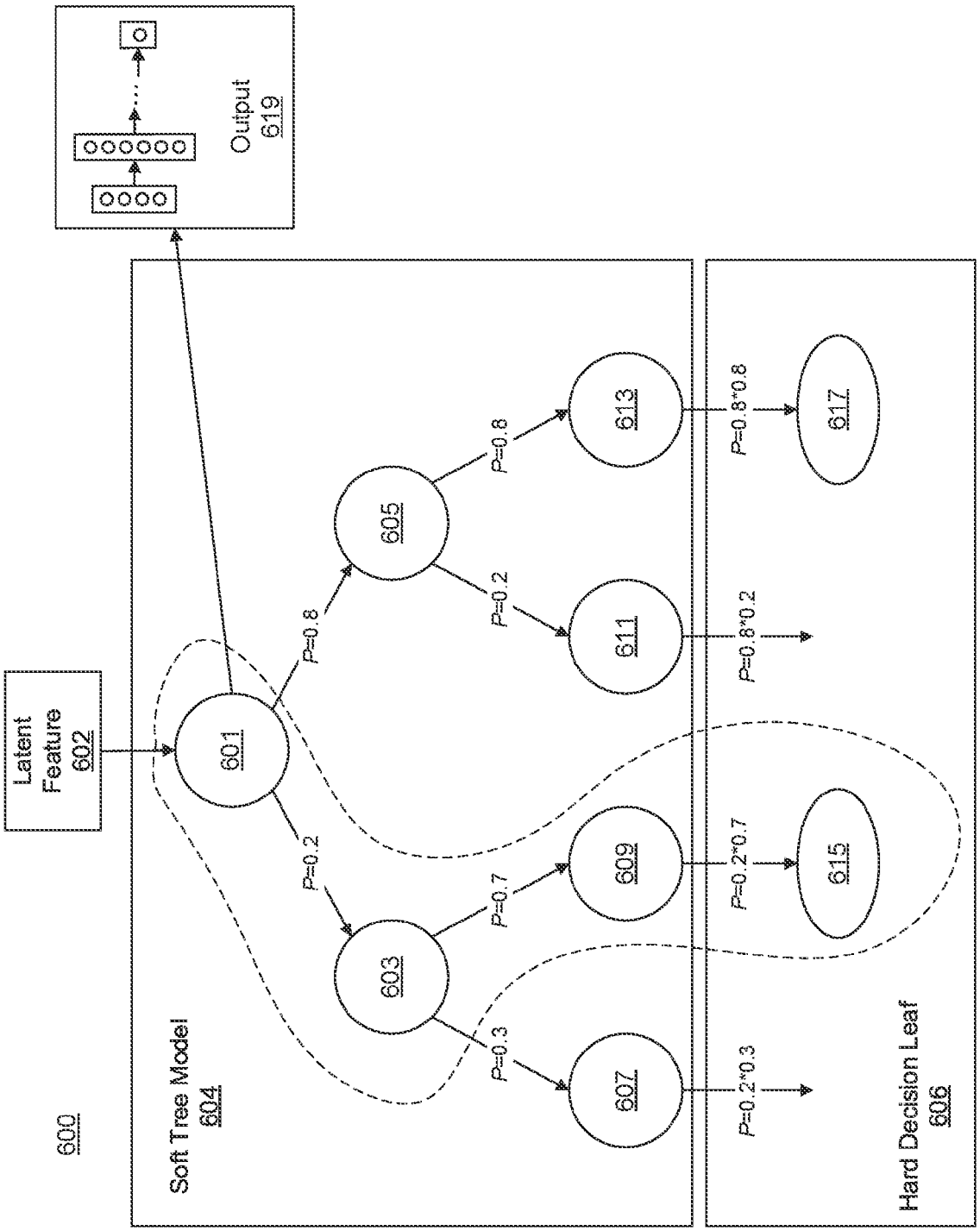
600
Latent Feature 602
601
P=0.8
P=0.2
605
603
P=0.8
P=0.2
P=0.7
P=0.3
613
611
609
607
P=0.8*0.8
P=0.8*0.2
P=0.2*0.7
P=0.2*0.3
617
615
Soft Tree Model 604
Hard Decision Leaf 606
Output 619

FIG. 6

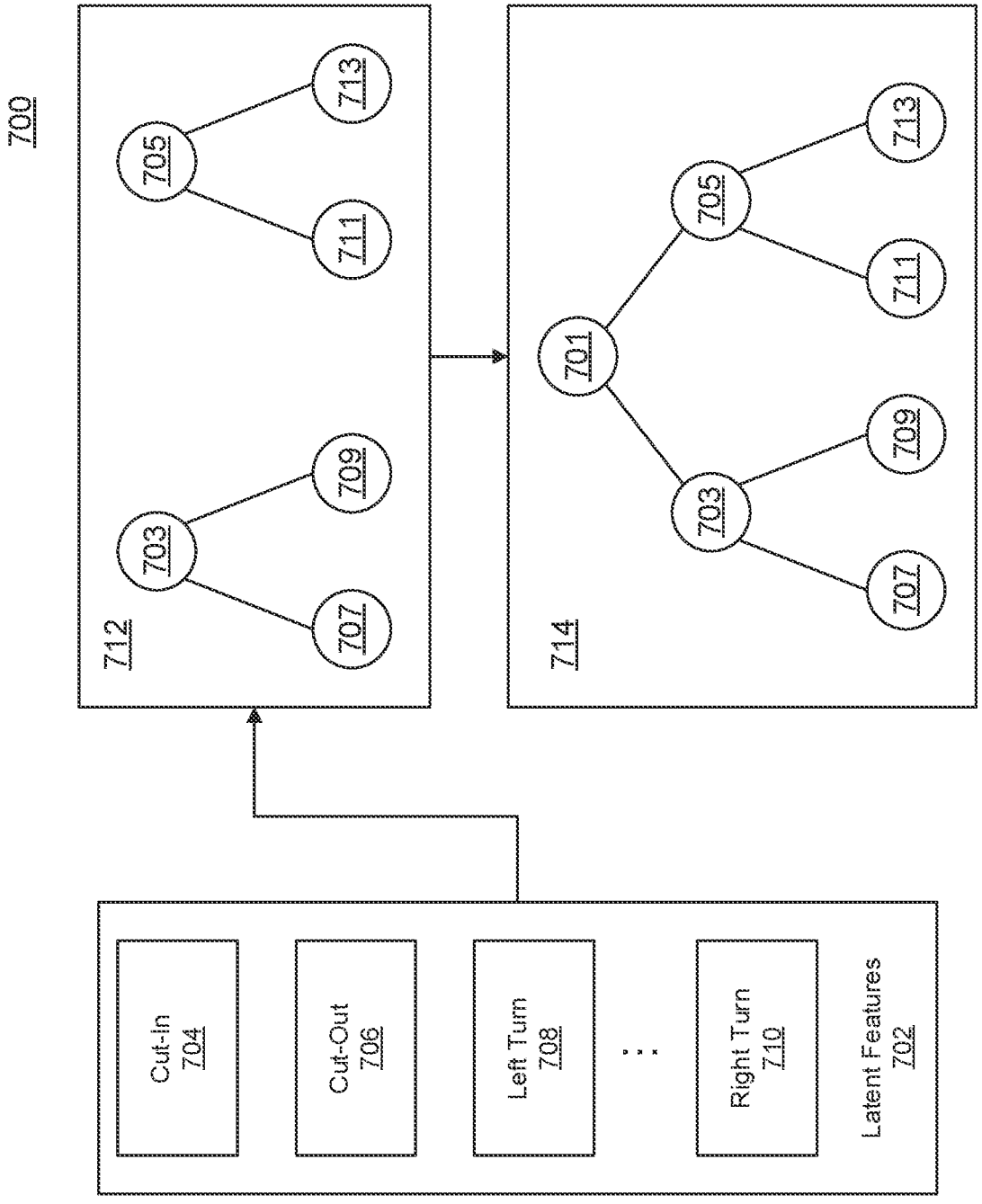
700
712
705
713
711
703
709
707
714
701
705
713
711
703
709
707
Latent Features
702
Cut-In
704
Cut-Out
706
Left Turn
708
Right Turn
710

FIG. 7

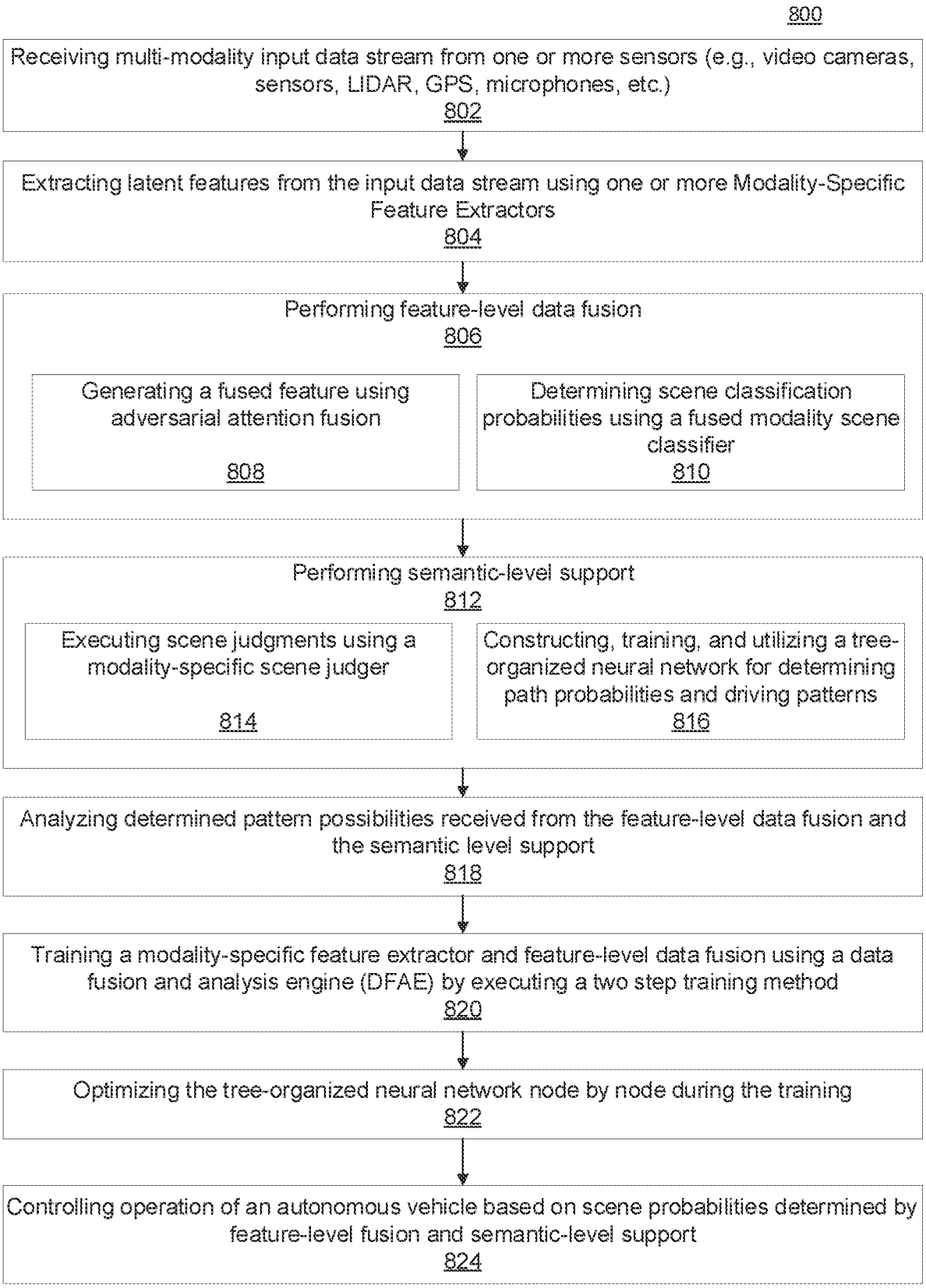
800
Receiving multi-modality input data stream from one or more sensors (e.g., video cameras, sensors, LIDAR, GPS, microphones, etc.)
802
Extracting latent features from the input data stream using one or more Modality-Specific Feature Extractors
804
Performing feature-level data fusion
806
Generating a fused feature using adversarial attention fusion
808
Determining scene classification probabilities using a fused modality scene classifier
810
Performing semantic-level support
812
Executing scene judgments using a modality-specific scene judger
814
Constructing, training, and utilizing a tree-organized neural network for determining path probabilities and driving patterns
816
Analyzing determined pattern possibilities received from the feature-level data fusion and the semantic level support
818
Training a modality-specific feature extractor and feature-level data fusion using a data fusion and analysis engine (DFAE) by executing a two step training method
820
Optimizing the tree-organized neural network node by node during the training
822
Controlling operation of an autonomous vehicle based on scene probabilities determined by feature-level fusion and semantic-level support
824

FIG. 8

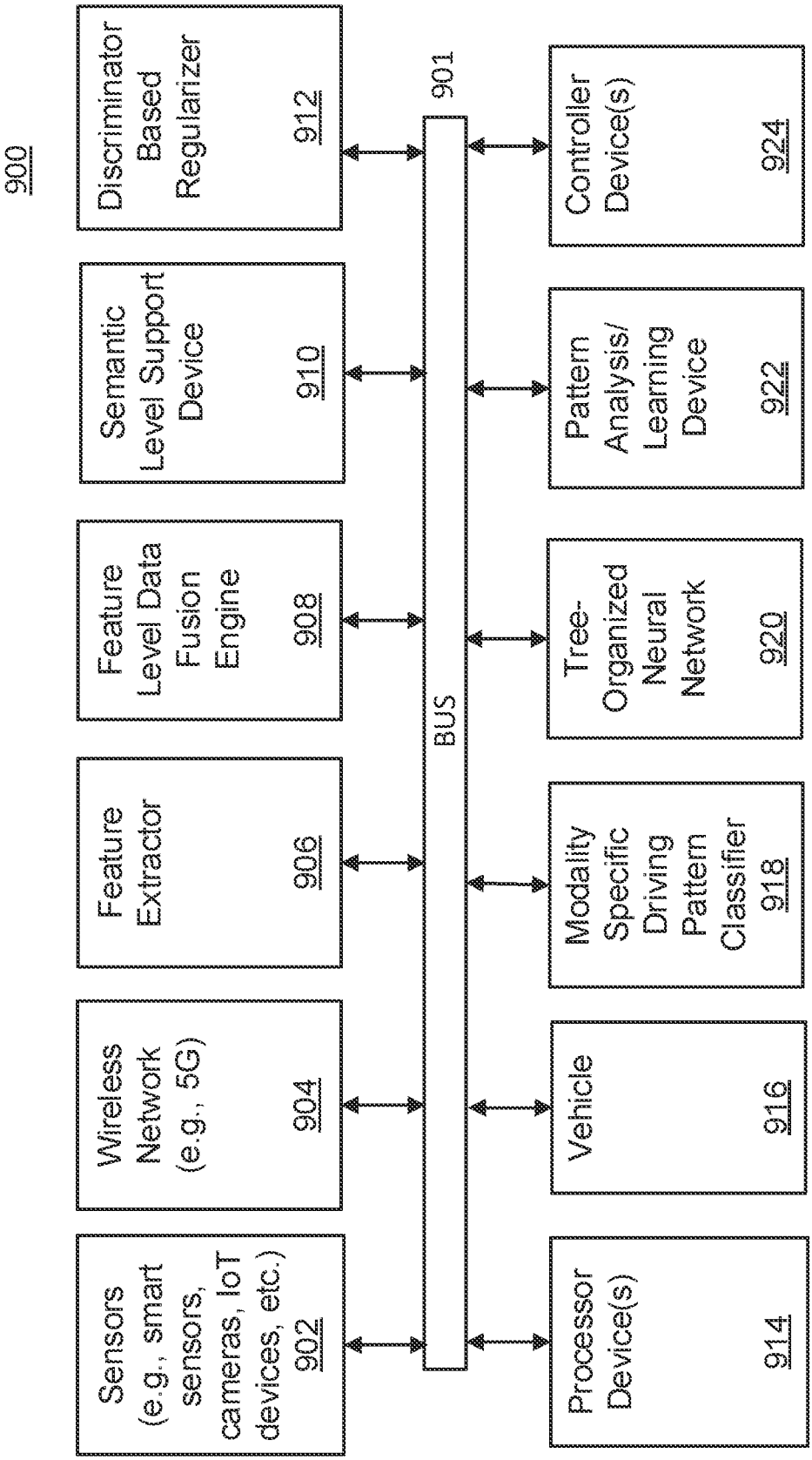
900
Sensors (e.g., smart sensors, cameras, IoT devices, etc.) 902
Wireless Network (e.g., 5G) 904
Feature Extractor 906
Feature Level Data Fusion Engine 908
Semantic Level Support Device 910
Discriminator Based Regularizer 912
Processor Device(s) 914
Vehicle 916
Modality Specific Driving Pattern Classifier 918
Tree-Organized Neural Network 920
Pattern Analysis/ Learning Device 922
Controller Device(s) 924
BUS
901

FIG. 9

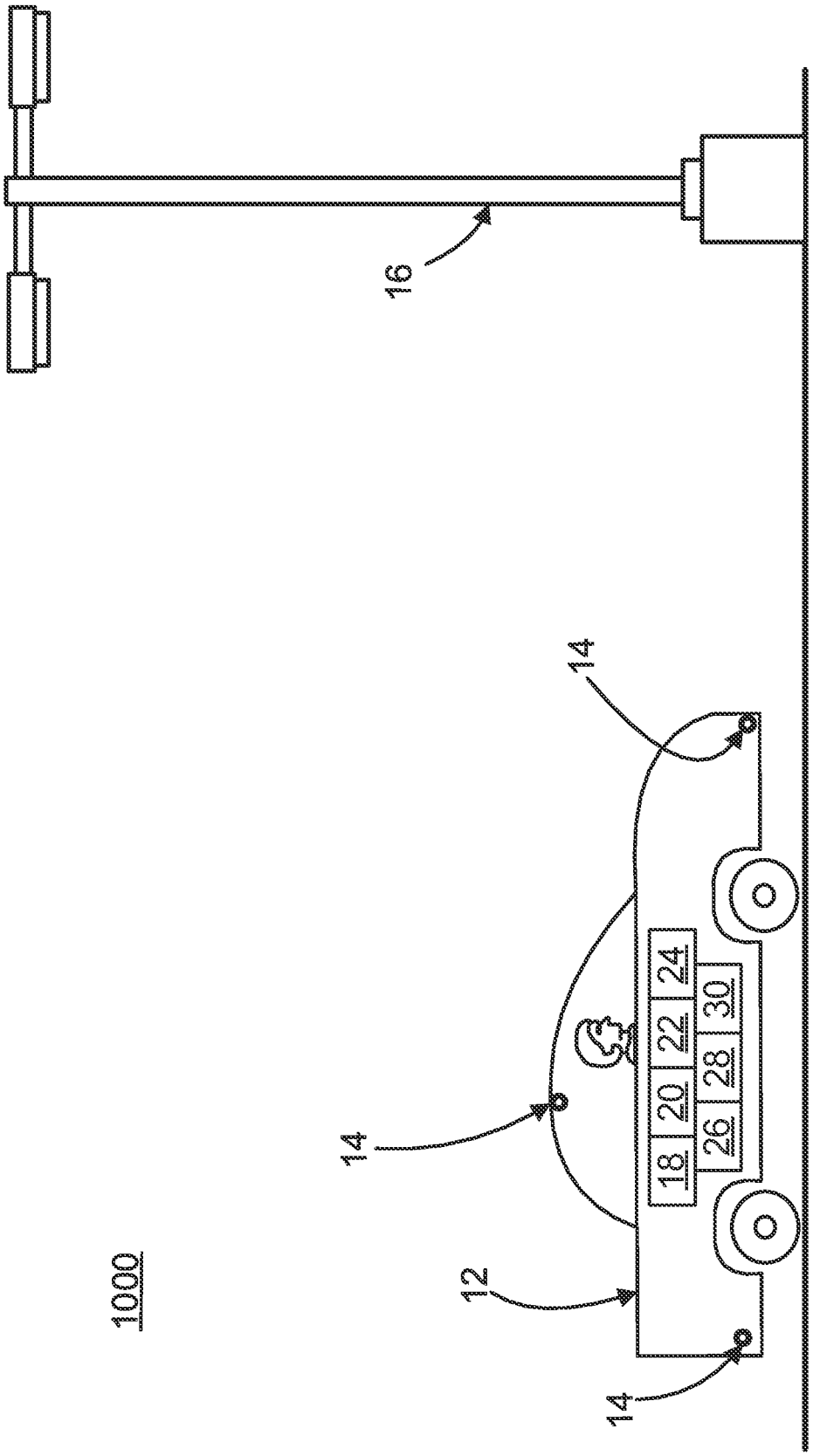

FIG. 10

DATA FUSION AND ANALYSIS ENGINE FOR VEHICLE SENSORS

RELATED APPLICATION INFORMATION

[0001] This application claims priority to U.S. Provisional App. No. 63/253,164, filed on Oct. 7, 2021, incorporated herein by reference in its entirety.

BACKGROUND

Technical Field

[0002] The present invention relates to a data fusion and analysis engine for vehicle sensors, and more particularly to improved accuracy of real-time data analysis tasks for autonomous, semi-autonomous, and/or notification-assisted operation of a vehicle based on data fusion and analysis of a plurality of different types of data from vehicle sensors.

Description of the Related Art

[0003] Conventional autonomous, semi-autonomous, and/or notification-assisted vehicles utilize a plurality of cameras placed on different areas of a vehicle (e.g., front, rear, left, right, etc.) to attempt to collect relevant data for autonomous driving by constructing a full, 360-degree view of the surrounding area during operation of the vehicle. While conventional, camera based autonomous driving systems provide accurate depictions of the view captured by each of the cameras, it is often difficult or not possible to determine relevant features such as a distance of a particular object when using such systems. Further, such camera based autonomous driving systems generally function poorly in low-visibility conditions (e.g., night, fog, rain, snow, etc.), which can result in low accuracy of data analysis and/or poor performance of vehicle operation tasks (e.g., acceleration, braking, notification of obstacles, etc.).

SUMMARY

[0004] According to an aspect of the present invention, a method is provided for data fusion and analysis of vehicle sensor data, including receiving a multiple modality input data stream from a plurality of different types of vehicle sensors, determining latent features by extracting modality-specific features from the input data stream, and aligning a distribution of the latent features of different modalities by feature-level data fusion. Classification probabilities can be determined for the latent features using a fused modality scene classifier. A tree-organized neural network can be trained to determine path probabilities and issue driving pattern judgments, with the tree-organized neural network including a soft tree model and a hard decision leaf. One or more driving pattern judgments can be issued based on a probability of possible driving patterns derived from the modality-specific features.

[0005] According to another aspect of the present invention, a system is provided for data fusion and analysis of vehicle sensor data. The system can include one or more processors operatively coupled to a non-transitory computer-readable storage medium, the processors being configured for receiving a multiple modality input data stream from a plurality of different types of vehicle sensors, determining latent features by extracting modality-specific features from the input data stream, and aligning a distribution of the latent features of different modalities by feature-level data fusion. Classification probabilities can be determined for the latent features using a fused modality scene classifier. A tree-organized neural network can be trained to determine path probabilities and issue driving pattern judgments, with the tree-organized neural network including a soft tree model and a hard decision leaf. One or more driving pattern judgments can be issued based on a probability of possible driving patterns derived from the modality-specific features.

[0006] According to another aspect of the present invention, a non-transitory computer readable storage medium including contents that are configured to cause a computer to perform a method for data fusion and analysis of vehicle sensor data, including receiving a multiple modality input data stream from a plurality of different types of vehicle sensors, determining latent features by extracting modality-specific features from the input data stream, and aligning a distribution of the latent features of different modalities by feature-level data fusion. Classification probabilities can be determined for the latent features using a fused modality scene classifier. A tree-organized neural network can be trained to determine path probabilities and issue driving pattern judgments, with the tree-organized neural network including a soft tree model and a hard decision leaf. One or more driving pattern judgments can be issued based on a probability of possible driving patterns derived from the modality-specific features.

[0007] These and other features and advantages will become apparent from the following detailed description of illustrative embodiments thereof, which is to be read in connection with the accompanying drawings.

BRIEF DESCRIPTION OF DRAWINGS

[0008] The disclosure will provide details in the following description of preferred embodiments with reference to the following figures wherein:

[0009] FIG. **1** is a block diagram illustratively depicting an exemplary processing system to which the present invention may be applied, in accordance with embodiments of the present invention;

[0010] FIG. **2** is a Venn diagram illustratively depicting a high-level view of a method for data fusion and analysis of a plurality of different types of data from vehicle sensors, in accordance with embodiments of the present invention;

[0011] FIG. **3** is a block/flow diagram illustratively depicting a high-level system and method for data fusion and analysis of a plurality of different types of data from vehicle sensors for autonomous, semi-autonomous, and/or notification-assisted operation of a vehicle, in accordance with embodiments of the present invention;

[0012] FIG. **4** is a block/flow diagram illustratively depicting a system and method for feature level data fusion of a plurality of different types of data from vehicle sensors for autonomous, semi-autonomous, and/or notification-assisted operation of a vehicle, in accordance with embodiments of the present invention;

[0013] FIG. **5** is a block/flow diagram illustratively depicting a system and method for semantic level classifying and analyzing of driving patterns using a modality specific driving pattern classifier and a tree-based neural network for autonomous, semi-autonomous, and/or notification-assisted

operation of a vehicle, in accordance with embodiments of the present invention;

[0014] FIG. **6** is a block/flow diagram illustratively depicting a system and method for generating, training, and utilizing a tree-based neural network for semantic level classifying and analyzing of driving patterns for autonomous, semi-autonomous, and/or notification-assisted operation of a vehicle, in accordance with embodiments of the present invention;

[0015] FIG. **7** is a block/flow diagram illustratively depicting an exemplary high-level method for constructing a tree-based neural network for semantic level classifying and analyzing of driving patterns for autonomous, semi-autonomous, and/or notification-assisted operation of a vehicle, in accordance with embodiments of the present invention;

[0016] FIG. **8** is a block/flow diagram illustratively depicting a method for data fusion and analysis of a plurality of different types of data from vehicle sensors for autonomous, semi-autonomous, and/or notification-assisted operation of a vehicle, in accordance with embodiments of the present invention;

[0017] FIG. **9** is a block/flow diagram illustratively depicting a system for data fusion and analysis of a plurality of different types of data from vehicle sensors for autonomous, semi-autonomous, and/or notification-assisted operation of a vehicle, in accordance with embodiments of the present invention; and

[0018] FIG. **10** is an exemplary system illustratively depicting an exemplary vehicle utilizing data fusion and analysis of a plurality of different types of data from vehicle sensors for autonomous, semi-autonomous, and/or notification-assisted operation of a vehicle, in accordance with embodiments of the present invention.

DETAILED DESCRIPTION OF PREFERRED EMBODIMENTS

[0019] In accordance with embodiments of the present invention, systems and methods are provided for autonomous, semi-autonomous, and/or notification-assisted operation of a vehicle, with improved accuracy of real-time data analysis and execution of vehicle-related tasks based on data fusion and analysis of a plurality of different types of data from vehicle sensors.

[0020] In various embodiments, a plurality of different types of sensors (e.g., cameras, Radar, proximity sensors, LIDAR, GPS, etc.) can be installed and utilized on a vehicle (e.g., automobile, aircraft, drone, boat, rocket ship, etc.) for autonomous, semi-autonomous, and/or notification-assisted operation of a vehicle, in accordance with aspects of the present invention. For ease of illustration, such vehicles capable of autonomous, semi-autonomous, and/or notification-assisted operation, in accordance with embodiments of the present invention are referred to as "autonomous vehicles" herein below.

[0021] In various embodiments, an autonomous vehicle with a plurality of different types of sensors can collect sensor data in multiple formats (e.g., "multi-modality"), and can integrate multiple data modalities (e.g., different types of data from different types of sensors) from each of the different sensors for fused analysis. For many data analysis tasks (e.g., failure detection, auto-driving assistant system's (ADAS) defect detection, ADAS video search, etc.), the accuracy is generally low, as conventional systems generally rely only on a single data modality.

[0022] The utilization of multi-modality data for controlling operation of an autonomous vehicle, in accordance with embodiments of the present invention, can increase accuracy of real-time data analysis tasks (e.g., data analysis of vehicle and/or external conditions for autonomous control of various functions of an autonomous vehicle). Further, increased accuracy and confidence for any of a plurality of autonomous tasks during operation of an autonomous vehicle by utilizing multi-modality data, in accordance with aspects of the present invention.

[0023] In various embodiments, as will be described in further detail herein below, the present invention can be utilized to solve a variety of problems that conventional autonomous driving systems fail to adequately address. For example, when utilizing multiple vehicle sensors to collect multi-modality data, raw sensor data can be dynamic and noisy, which can result in lowered accuracy for data analysis tasks. The present invention, can perform data fusion to generate comparatively high-quality features (e.g., cleaned data without noise) from the multi-modality sensor data, which can be utilized as input for further analysis, in accordance with aspects of the present invention. Further, it can be difficult to determine an analysis result by utilizing only a single modality, as in conventional systems, as a single modality generally includes limited scope and cannot provide sufficient data for accurate analysis and judgments for autonomous vehicle control tasks. The present invention can provide increased accuracy of such data analysis at least in part by integration data from multiple modalities from a plurality of different types of sensors for a complete and accurate view, in accordance with aspects of the present invention.

[0024] In some embodiments, as will be described in further detail herein below, a data fusion and analysis engine (DFAE) can be utilized for the above-discussed sensor data analysis for control of an autonomous vehicle. The DFAE can include two main components, including a feature level data fusion component and a semantic level fusion component. The feature level data fusion can be performed prior to any main data analysis tasks (e.g., semantic-level fusion, driving pattern analysis and classification, tree-organized neural network generation and utilization, DFAE learning, adversarial attention fusing, etc.), and thus can filter out the noises and generate high quality features for further analysis to prevent inaccurate results from lower quality features being analyzed, as in conventional systems. The semantic level fusion can be performed after any main analysis tasks to further refine the analysis results and boost the output accuracy, in accordance with aspects of the present invention.

[0025] Embodiments described herein may be entirely hardware, entirely software or including both hardware and software elements. In a preferred embodiment, the present invention is implemented in software, which includes but is not limited to firmware, resident software, microcode, etc.

[0026] Embodiments may include a computer program product accessible from a computer-usable or computer-readable medium providing program code for use by or in connection with a computer or any instruction execution system. A computer-usable or computer readable medium may include any apparatus that stores, communicates, propagates, or transports the program for use by or in connec-

tion with the instruction execution system, apparatus, or device. The medium can be magnetic, optical, electronic, electromagnetic, infrared, or semiconductor system (or apparatus or device) or a propagation medium. The medium may include a computer-readable storage medium such as a semiconductor or solid-state memory, magnetic tape, a removable computer diskette, a random-access memory (RAM), a read-only memory (ROM), a rigid magnetic disk and an optical disk, etc.

[0027] Each computer program may be tangibly stored in a machine-readable storage media or device (e.g., program memory or magnetic disk) readable by a general or special purpose programmable computer, for configuring and controlling operation of a computer when the storage media or device is read by the computer to perform the procedures described herein. The inventive system may also be considered to be embodied in a computer-readable storage medium, configured with a computer program, where the storage medium so configured causes a computer to operate in a specific and predefined manner to perform the functions described herein.

[0028] A data processing system suitable for storing and/or executing program code may include at least one processor coupled directly or indirectly to memory elements through a system bus. The memory elements can include local memory employed during actual execution of the program code, bulk storage, and cache memories which provide temporary storage of at least some program code to reduce the number of times code is retrieved from bulk storage during execution. Input/output or I/O devices (including but not limited to keyboards, displays, pointing devices, etc.) may be coupled to the system either directly or through intervening I/O controllers.

[0029] Network adapters may also be coupled to the system to enable the data processing system to become coupled to other data processing systems or remote printers or storage devices through intervening private or public networks. Modems, cable modem and Ethernet cards are just a few of the currently available types of network adapters.

[0030] Aspects of the present invention are described below with reference to flowchart illustrations and/or block diagrams of methods, systems and computer program products according to embodiments of the present invention. It is noted that each block of the flowcharts and/or block diagrams, and combinations of blocks in the flowcharts and/or block diagrams, may be implemented by computer program instructions.

[0031] The flowchart and block diagrams in the figures illustrate the architecture, functionality, and operation of possible implementations of systems, methods and computer program products according to various embodiments of the present invention. Each block in the flowchart or block diagrams may represent a module, segment, or portion of code, which comprises one or more executable instructions for implementing the specified logical function(s), and in some alternative implementations of the present invention, the functions noted in the block may occur out of the order noted in the figures. For example, two blocks shown in succession may, in fact, be executed substantially concurrently, may sometimes be executed in reverse order, or may be executed in any other order, depending on the functionality of a particular embodiment.

[0032] It is also noted that each block of the block diagrams and/or flowchart illustration, and combinations of blocks in the block diagrams and/or flowchart illustration, can be implemented by specific purpose hardware systems that perform the specific functions/acts, or combinations of special purpose hardware and computer instructions according to the present principles.

[0033] Referring now to the drawings in which like numerals represent the same or similar elements and initially to FIG. **1**, an exemplary processing system **100**, to which the present principles may be applied, is illustratively depicted in accordance with embodiments of the present principles.

[0034] In some embodiments, the processing system **100** can include at least one processor (CPU) **104** operatively coupled to other components via a system bus **102**. A cache **106**, a Read Only Memory (ROM) **108**, a Random Access Memory (RAM) **110**, an input/output (I/O) adapter **120**, a sound adapter **130**, a network adapter **140**, a user interface adapter **150**, and a display adapter **160**, are operatively coupled to the system bus **102**.

[0035] A first storage device **122** and a second storage device **124** are operatively coupled to system bus **102** by the I/O adapter **120**. The storage devices **122** and **124** can be any of a disk storage device (e.g., a magnetic or optical disk storage device), a solid-state magnetic device, and so forth. The storage devices **122** and **124** can be the same type of storage device or different types of storage devices.

[0036] A speaker **132** is operatively coupled to system bus **102** by the sound adapter **130**. A transceiver **142** is operatively coupled to system bus **102** by network adapter **140**. A display device **162** is operatively coupled to system bus **102** by display adapter **160**. One or more sensors **164** (e.g., cameras, proximity sensors, LIDAR data, GPS data, time-series signal detectors, etc.) can be further coupled to system bus **102** by any appropriate connection system or method (e.g., Wi-Fi, wired, network adapter, etc.), in accordance with aspects of the present invention.

[0037] A first user input device **152**, a second user input device **154**, and a third user input device **156** are operatively coupled to system bus **102** by user interface adapter **150**. The user input devices **152**, **154**, and **156** can be any of a keyboard, a mouse, a keypad, an image capture device, a motion sensing device, a microphone, a device incorporating the functionality of at least two of the preceding devices, and so forth. Of course, other types of input devices can also be used, while maintaining the spirit of the present principles. The user input devices **152**, **154**, and **156** can be the same type of user input device or different types of user input devices. The user input devices **152**, **154**, and **156** are used to input and output information to and from system **100**.

[0038] Of course, the processing system **100** may also include other elements (not shown), as readily contemplated by one of skill in the art, as well as omit certain elements. For example, various other input devices and/or output devices can be included in processing system **100**, depending upon the particular implementation of the same, as readily understood by one of ordinary skill in the art. For example, various types of wireless and/or wired input and/or output devices can be used. Moreover, additional processors, controllers, memories, and so forth, in various configurations can also be utilized as readily appreciated by one of ordinary skill in the art. These and other variations of the processing system **100** are readily contemplated by one of

ordinary skill in the art given the teachings of the present principles provided herein.

[0039] Moreover, it is to be appreciated that systems **300**, **400**, **500**, **600**, **900**, and **1000**, described below with respect to FIGS. **3**, **4**, **5**, **6**, **9**, and **10**, respectively, are systems for implementing respective embodiments of the present invention. Part or all of processing system **100** may be implemented in one or more of the elements of systems **300**, **400**, **500**, **600**, **900**, and **1000**, in accordance with aspects of the present invention.

[0040] Further, it is to be appreciated that processing system **100** may perform at least part of the methods described herein including, for example, at least part of methods **200**, **300**, **400**, **500**, **600**, **700**, and **800**, described below with respect to FIGS. **2**, **3**, **4**, **5**, **6**, **7**, and **8**, respectively. Similarly, part or all of systems **300**, **400**, **500**, **600**, **900**, and **1000** may be used to perform at least part of methods **200**, **300**, **400**, **500**, **600**, **700**, and **800** of FIGS. **2**, **3**, **4**, **5**, **6**, **7**, and **8**, respectively, in accordance with aspects of the present invention.

[0041] As employed herein, the term "hardware processor subsystem", "processor", or "hardware processor" can refer to a processor, memory, software, or combinations thereof that cooperate to perform one or more specific tasks. In useful embodiments, the hardware processor subsystem can include one or more data processing elements (e.g., logic circuits, processing circuits, instruction execution devices, etc.). The one or more data processing elements can be included in a central processing unit, a graphics processing unit, and/or a separate processor- or computing element-based controller (e.g., logic gates, etc.). The hardware processor subsystem can include one or more on-board memories (e.g., caches, dedicated memory arrays, read only memory, etc.). In some embodiments, the hardware processor subsystem can include one or more memories that can be on or off board or that can be dedicated for use by the hardware processor subsystem (e.g., ROM, RAM, basic input/output system (BIOS), etc.).

[0042] In some embodiments, the hardware processor subsystem can include and execute one or more software elements. The one or more software elements can include an operating system and/or one or more applications and/or specific code to achieve a specified result.

[0043] In other embodiments, the hardware processor subsystem can include dedicated, specialized circuitry that performs one or more electronic processing functions to achieve a specified result. Such circuitry can include one or more application-specific integrated circuits (ASICs), field-programmable gate arrays (FPGAs), and/or programmable logic arrays (PLAs).

[0044] These and other variations of a hardware processor subsystem are also contemplated in accordance with embodiments of the present invention.

[0045] Referring now to FIG. **2**, a Venn diagram **200** illustratively depicting a high-level view of a method for data fusion and analysis of a plurality of different types of data from vehicle sensors is illustratively depicted in accordance with embodiments of the present invention.

[0046] In an illustrative embodiment, video data **202** and other sensor data **204** can be fused to form an overlapped area **206** of the video data **202** and other sensor data **204**. The overlapped area **206** can include common information from the video data **206** and other sensor data **204** shared by different modalities, and can be utilized to remove the noises present in a single modality to provide improved, high-quality input for further analysis using a Data Fusion and Analysis Engine (DFAE) for vehicle sensors (e.g., autonomous vehicle sensors). The non-overlapped areas (e.g., video data **202**, sensor data **204**) can include, for example, information which describes differentiated information that provides auxiliary information (e.g., GPS sensor data, CAN Bus sensor data, etc.), which can be utilized in future analysis tasks, in accordance with aspects of the present invention.

[0047] In some embodiments, the input video data **202** and sensor data **204** can be any of a plurality of data types/formats (e.g., video, LIDAR data, time series signals, etc.) from any of a plurality of respective vehicle sensors, which can be utilized for feature level data fusion **208** and/or semantic level support **210**, in accordance with aspects of the present invention. The feature level data fusion **208** can remove noises of input data, and thus can generate comparatively high-quality features (e.g., latent features) for analysis tasks, in accordance with aspects of the present invention.

[0048] The feature level data fusion **208** can be performed prior to any main data analysis tasks (e.g., semantic-level fusion, driving pattern analysis and classification, tree-organized neural network generation and utilization, DFAE learning, adversarial attention fusing, etc.), and thus can filter out the noises and generate comparatively high quality features (e.g., fused feature) for further analysis to prevent inaccurate results from lower quality features (e.g., latent features) being analyzed, as in conventional systems. The semantic level support **210** can be performed after any main analysis tasks to further refine the analysis results and boost the output accuracy by utilizing the information from multiple data modalities, in accordance with aspects of the present invention.

[0049] Referring now to FIG. **3**, a high-level system and method **300** showing a data fusion and analysis engine for a plurality of different types of data from vehicle sensors for autonomous, semi-autonomous, and/or notification-assisted operation of a vehicle is illustratively depicted in accordance with embodiments of the present invention.

[0050] In one embodiment, a data fusion and analysis engine (DFAE) **300** for vehicle sensors can include a feature level data fusion module **314** and a semantic-level support module **316**, which can generate comparatively high-quality input features and refine output for data analysis tasks for vehicle-related data, respectively, in accordance with aspects of the present invention. The DFAE **300** can be utilized as a generalized framework, and as such, does not need to change any code for main data analysis tasks (e.g., Advanced Driver Assistance Systems (ADAS) video search, ADAS defect detection, car fault detection, road hazard detection), and can be applied directly to such main data analysis tasks, in contrast to conventional systems. Further, by integrating and fusing data of multiple modalities, accuracy of data analysis tasks can be significantly improved in comparison to conventional systems, in accordance with aspects of the present invention.

[0051] In an illustrative embodiment, a task of driving pattern analysis for improved autonomous vehicle navigation is described, but it is to be appreciated that the present principles can be applied for any of a plurality of other vehicle-related tasks (e.g., navigation, acceleration, braking, weather condition response, etc.), in accordance with various embodiments of the present invention.

[0052] In some embodiments, a plurality of different types of input data can be received and/or analyzed, including, for example, video data **302** and other sensor data **304** received from any of a plurality of sensors (e.g., cameras, Radar, proximity sensors, LIDAR, GPS, Controller Area Network (CAN) bus etc.) deployed on a vehicle, in accordance with aspects of the present invention. One or more modality specific feature extractors **306**, **308** can process the received video data **302** and other sensor data **304**, respectively, to extract latent features **310**, **312**, respectively, for further processing by feature level data fusion **314** and/or semantic level support **316**, in accordance with aspects of the present invention.

[0053] In various embodiments, the feature level data fusion **314** can align latent feature distribution of different modalities by utilizing adversarial learning and attention **318** to generate a fused feature **320**. The adversarial learning and attention fusion **318** can utilize an adversarial regularizer to align the latent feature distribution of distinct modalities. The fused feature **320** can be utilized by a fused modality scene classifier **322** to determine classification probabilities in accordance with aspects of the present invention, which will be described in further detail herein below with reference to FIG. **4**.

[0054] Modality invariance in a latent space can be achieved more efficiently utilizing an adversarial process such as adversarial attention fusion **318** at least in part because improved alignment of modality distributions aids subsequent fusion, particularly when fused features **320** are calculated using a weighted average of latent features. Furthermore, the present invention can implement an attention layer that adaptively allocates the weight for each modality to measure the value of distinct modalities to further improve accuracy of the feature level data fusion **314**, in accordance with aspects of the present invention.

[0055] In some embodiments, semantic-level support **316** can determine and utilize the differences of each modality to provide support for driving patterns classification using a modality specific scene judger **324**. The modality specific scene judger **324** can receive and/or analyze scene action events **326** (e.g., cut-in, cut-through, wrong way, obstacle, etc.) as input, and can issue judgments **328**, which can include determining and outputting a probability of possible driving patterns, as shown in Table 1, below:

TABLE 1

SCENE	JUDGMENT
Cut-in	0.65
Cut-through	0.22
...	...
Wrong-way	Not Possible
Obstacle	Not Possible

[0056] In some embodiments a tree-organized neural network can be utilized for the judgments **328**, and can be utilized, for example, to determine impossible driving pattern judgments (e.g., shown in Table 1), which can be input and utilized by the pattern analyzer **330** to further increase accuracy of a determined driving pattern output **332**. The determined driving pattern output **332** can be utilized for improved vehicle operation by a vehicle function controller **334** (e.g., accelerator, brake, lighting, air conditioning, etc.). In some embodiments, the pattern analyzer **330** can consider the judgements from the feature-level data fusion from the scene classifier **322** and the semantic-level support **316** simultaneously in real-time to accurately determine the driving pattern using the pattern analyzer **330** for vehicle operation by the vehicle controller **334**, in accordance with aspects of the present invention.

[0057] In some embodiments, for the output results **332** if the pattern analyzer **330**, the possibilities from the feature-level fusion **314** and the semantic level support **316** sum up first in the pattern analyzer **330**, and judged impossible driving patterns can be ruled out. A softmax layer can be applied on the rest of the sum-up possibilities, and the highest possibility can be outputted as the final judged driving pattern in block **332**, in accordance with aspects of the present invention.

[0058] It is to be appreciated that although the system and method **300** is described herein below as being directed to autonomous vehicle control, the present principles can be applied to other cyber physical systems (e.g., smart city (camera, video, temperature sensor, etc.), smart house, etc.), in accordance with aspects of the present invention.

[0059] Referring now to FIG. **4**, a system and method **400** for feature level data fusion of a plurality of different types of data from vehicle sensors for autonomous, semi-autonomous, and/or notification-assisted operation of a vehicle is illustratively depicted in accordance with embodiments of the present invention.

[0060] In accordance with various embodiments, feature level fusion **400** can include aligning received feature distributions and assigning a discriminator-based regularizer **402** in pairwise fashion. It can then be determined whether the real data and fake data belong to the same distribution. Adversarial learning can be utilized to reach modality invariance in the latent space and to quantify the importance of various modalities. The attention layer is utilized for learning fusion weights, in accordance with aspects of the present invention, as will be described in further detail herein below.

[0061] Multiple statistical features of multi-modal data have shown that fusing different modalities in the data space is difficult to accurately perform in practice. In various embodiments, such fusing of different modalities in the data space can be performed by creating and/or utilizing one or more modality-specific feature extractors **404**, **406** to convert the data into low-dimensional latent space to generate one or more latent features **408**, **410**. A major duty of feature learning is carried out by the feature extractors **408**, **410**, and it also has the goal of confusing the discriminator **402**, in accordance with aspects of the present invention. As an example, for the vth modality, the corresponding latent feature **408**, **410** can be encoded as follows:

$$K_{ij}^{v} = \exp\left(-\left\|h_i^v - h_j^v\right\|_2 / 2\sigma^2\right)$$

where $E_v(.)$ refers to the modality's encoder parameterized by θ_e^vThen, based on H^v, a data metric (e.g., Gaussian metric) can be estimated of data in latent space **408**, **410**. Formally, it can be determined as follows:

$$K_{ij}^{v} = \exp\left(-\left\|h_i^v - h_j^v\right\|_2 / 2\sigma^2\right)$$

where h_i^v denotes the ith column of H^v (e.g., i^{th} sample) and σ represents the bandwidth. In some embodiments, encoder networks can be constrained with, for example, random Independent and Identical Distribution (IID) Gaussian weights to avoid degenerated metric structure of data. The metric structure of data can be preserved by a DNN with random IID Gaussian weights when the intrinsic dimensionality of the data is proportional to the network width.

[0062] In various embodiments, a modality fusion module can combine data from various modalities to provide a comprehensive estimate, and can include the discriminator-based regularizer **402** and the modality-awareness attention layer **412**, in accordance with aspects of the present invention.

[0063] In some embodiments, a discriminator-based regularizer **402** can align the latent feature distributions of any or a plurality of modalities, and can include, for example, of V - 1 discriminators, each of which can be three fully connected layers. For example, taking the first modality as a key modality, a discriminator-based regularizer **402** can be assigned between the first modality and one of the other modalities in pairwise fashion. For each latent feature **408**, **410** H^v(v = 2,3, ..., V) drawn from the distribution p_v, the discriminator-based regularizer **402** p_v, parameterized by θ_d^v can determine whether its real data $h_i^1 \in H^1$ and fake data $\tilde{h}_i^v \in H^v$ belong to the same distribution. In this process, the discriminator-based regularizer D_v can be optimized in an alternating manner with an encoder network E_v to solve adversarial min-max problem. In this way, the discriminator-based regularizer **402** can guide encoder networks to learn the same latent feature **408**, **410** distribution, in accordance with aspects of the present invention. Note that considering all possible combinations (e.g., up to 2^v) can dramatically increase the burden of network training.

[0064] In various embodiments, a modality-awareness attention layer **412** can learn the weights for different modalities, the input of which can be concatenated features h (e.g., concatenated latent features **408**, **410**) and the output of which can be a V dimensional vector w. In various embodiments, fused weights can be output in block **414**, weighted fusion can be performed in block **416**, and a fused feature can be output in block **418**, in accordance with aspects of the present invention.

[0065] The attention layer **412** can include, for example, three fully connected layers and a softmax layer, functions of which can be represented as follows:

$$h = \left[h^1, h^2, \ldots, h^v\right] \tag{1}$$

$$\text{act} = FCs(h) \tag{2}$$

$$\text{e} = \text{Softmax}\left(\text{sigmoid}\left(\text{act}\right)/\tau\right) \tag{3}$$

$$\text{w} = \text{Mean}\left(\text{e, dim} = 0\right) \tag{4}$$

where [·] denotes a concatenation operator, FCs(·) represents 3 fully connected layers, and τ represents a calibration factor. The sigmoid function together with the calibration factor can be utilized to avoid assigning close-to-one score to the most related modality. Note that for illustrative purposes, the parameters in this module are denoted as θ_a. At this time, the fused representations **418** of a sample can be determined as follows:

$$h_f = \sum_v w_v h^v$$

Then, h_f can be fed into a fused modality scene classifier, which can include two fully connected layers and a softmax layer, to determine the classification probabilities, in accordance with aspects of the present invention, and will described in further detail herein below with reference to FIGS. **5** and **6**.

[0066] Referring now to FIG. **5**, a system and method **500** for semantic level classifying and analyzing of driving patterns using a modality specific driving pattern classifier and a tree-based neural network for autonomous, semi-autonomous, and/or notification-assisted operation of a vehicle is illustratively depicted in accordance with embodiments of the present invention.

[0067] In various embodiments, an input data stream from one or more sensors (e.g., video cameras, proximity sensors, infrared sensors, microphones, velocity sensors, etc.) can be monitored and data can be received as one or more latent features in block **502**. N As the feature-level data fusion, described with reference to FIG. **4**, can essentially completely eliminate the differences of different modalities, the semantic level classifying and analyzing of FIG. **5** can makes full use of the differences of each modality to determine driving mode classifications for a plurality of features, in accordance with aspects of the present invention.

[0068] In some embodiments, two main components can be utilized for the semantic level support system and method **500**. The components can include a modality specific driving pattern classifier **504**, which can determine and output a probability of one or more possible driving patterns. Another component can be a tree-organized neural network **506**, which can determine and output a path probability in block **519**, and the output can be utilized by a modality specific scene judger **508** for driving pattern judgments (e.g., impossible driving pattern judgment). Some driving patterns are not easy to be confirmed, but easy to be determined and impossible to appear. For example, the data of an autonomous vehicle (e.g., ego car) can confirm the possibility of the other vehicle's wrong way driving (e.g., the ego car is not slowing down at all).

[0069] In some embodiments, semantic-level support can determine and utilize the differences of each of a plurality of modalities for determining driving patterns classification using a modality specific scene judger **508**. A modality specific scene judger **508** can receive and/or analyze scene action events **510** (e.g., cut-in, cut-through, wrong way, obstacle, etc.) as input, and can issue judgments **512**, which can include determining and outputting a probability of possible driving patterns, as shown in Table 2, below:

TABLE 2

SCENE	JUDGMENT
Cut-in	0.65
Cut-through	0.22
...	...
Wrong-way	Not Possible
Obstacle	Not Possible

[0070] In various embodiments, a modality specific driving pattern classifier **504** can include 3 fully connected layer and a softmax layer, and the input can be the latent feature **502** H^v(v = 1,2,3, ..., V). A function of the modality specific driving pattern classifier can be to output a classification probability of each driving pattern based on the latent feature **502** of each modality, respectively, which can be analogous to driving pattern understanding based on unfused features.

[0071] In some embodiments a tree-organized neural network **506** can be utilized for the judgments **512**, which can include, for example, determining impossible driving pattern judgments (e.g., shown in Table 2). A tree structure can be utilized to organize multiple neural networks in a hierarchical way. In some embodiments, the tree-organized neural network **506** can include a soft tree model and hard decision leaf. The system can take a latent feature **502** h_i^1as an input example, which can be received from a trained modality-specific feature extractor. The latent feature **502** h_i^1can traverse each leaf node **501**, **503**, **505**, **507**, **511**, **513**, **515**, **517** and determine the path probabilities, in accordance with various aspects of the present invention.

[0072] Referring now to FIG. **6**, a system and method **600** for generating, training, and utilizing a tree-based neural network for semantic level classifying and analyzing of driving patterns for autonomous, semi-autonomous, and/or notification-assisted operation of a vehicle is illustratively depicted in accordance with embodiments of the present invention.

[0073] In various embodiments, a tree structure can be utilized to organize multiple neural networks in a hierarchical way. In some embodiments, a tree-organized neural network can include a soft tree model **604** and a hard decision leaf **606**. The system can take a latent feature **602** h_i^1as an input example, which can be received from a trained modality-specific feature extractor. The latent feature **602** h_i^1can traverse each leaf node **601**, **603**, **605**, **607**, **611**, **613**, **615**, **617** and determine the path probabilities, in accordance with various aspects of the present invention.

[0074] In various embodiments, the upper component of the tree-organized neural network can be a soft tree model **604**. Each node **601**, **603**, **605**, **607**, **609**, **611**, **613** in the soft tree model **604** can be a neural network. The structure of the neural network can be the same for each node **601**, **603**, **605**, **607**, **609**, **611**, **613**, and can include 2 fully connected layers and a softmax layer for binary classification. These nodes can be denoted as N_k^j, where j represents the level of the node. For example, Ni represents the first node in the first level, and it can also be the root node. The leaves in the soft tree model can correspond to each driving pattern (e.g., cut in, cut out, cut through, etc.) in accordance with aspects of the present invention.

[0075] In various embodiments, the tree-organized neural network of the present invention can function essentially equivalently to performing top-down hierarchical clustering of the latent feature **602** h_i^1. The neural network N_i^jin the hierarchical clustering can be equivalent to a filtering for impossible patterns. After multiple layers of filtering, the confidence of impossible scenes can be further suppressed, and a final output probability **619** of the soft tree model can be the path probability. In this way, the loss of internal nodes can be effectively minimized, in accordance with aspects of the present invention. For example, the path probability outputted by the first leave node can be P_1^f, and can be represented as follows:

$$P_1^f = \prod_{J=1}^{J} N_1^j\left(h_i^1\right)$$

where J represents a total number of levels of the tree structure.

[0076] In various embodiments, a hard decision leaf **606** can be utilized and can include nodes **615** and **617**. To achieve the hard decisions, a softmax layer can be utilized as an activation layer, which can result in a trade-off situation. That is, as more impossible driving patterns are provided, more semantic level support can be supplied, but there also can be a higher possibility of providing false positive decisions for the final results. The trade-off can be considered through the setting of a threshold T and can be utilized for judging driving patterns. For example, a driving pattern with $\sigma(p^f) = 0$ can be judged as an impossible driving pattern as follows:

$$\sigma\left(p^f\right) = \begin{cases} p^f, & x >= T \\ 0, & x < T \end{cases}$$

[0077] Prior to training, a tree structure can be created, and data from the training set can be utilized to obtain latent features, in accordance with aspects of the present invention. The creation of a tree structure will be described in further detail herein below with reference to FIG. **7**.

[0078] Referring now to FIG. **7**, an exemplary high-level method **700** for constructing a tree-based neural network for semantic level classifying and analyzing of driving patterns for autonomous, semi-autonomous, and/or notification-assisted operation of a vehicle is illustratively depicted in accordance with embodiments of the present invention.

[0079] In one embodiment, prior to training, a tree structure **714** can be created, and can utilize data from a training set of latent features **702** to obtain labeled latent features (e.g., cut-in **704**, cut-out **706**, left turn **708**, right turn **710**, etc.), which can correspond to a cut-in node **707**, a cut-out node **709**, a left turn node **711**, and a right turn node **713**, respectively. In an embodiment including a dataset d with two latent features $h_i^v$and h_j^v, a similarity between them can be measured by the inner product after normalization as follows:

$$d\left(h_i^v, h_j^v\right) = Normalized\left[h_i^v\right] \cdot Normalized\left[h_j^v\right]$$

[0080] Based on the average latent feature similarity between known different driving patterns, a similar driving pattern pair can be selected to build the tree leaves. Then, an average feature similarity between subtrees can be calculated, and the higher leaves **703**, **705** can be built until the root node **701** is reached using a bottom-up construction, in accordance with aspects of the present invention. In the illustrative example of FIG. **7**, the tree is shown to be built in a bottom-up way, in which left turn **711** and right turn **713** can constitute a subtree first, and then a higher level can be built with the subtree including cut-in **707** and cut out **709**, but it is to be appreciated that any features and number of

levels can be utilized in accordance with various aspects of the present invention.

[0081] Referring now to FIG. **8**, a method **800** for data fusion and analysis of a plurality of different types of data from vehicle sensors for autonomous, semi-autonomous, and/or notification-assisted operation of a vehicle is illustratively depicted in accordance with embodiments of the present invention.

[0082] In one embodiment, a multi-modality input data stream can be received from one or more vehicle sensors (e.g., video cameras, sensors, LIDAR, GPS, microphones, etc.) in block **802**. In block **804**, latent features can be extracted from the input data stream using one or more Modality-Specific Feature Extractors. Feature level data fusion can be executed in block **806**, and can include generating a fused feature using adversarial attention fusion in block **808** and/or determining scene classification probabilities using a fused modality scene classifier in block **810**. Semantic-level support can be performed in block **812**, and can include executing scene judgments using a Modality-Specific Scene Judger in block **814** and/or constructing, training, and utilizing a tree-organized neural network for determining path probabilities and driving patterns in block **816**. In block **818**, determined pattern possibilities can be analyzed upon receipt from the feature-level data fusion and the semantic level support, in accordance with aspects of the present invention.

[0083] In various embodiments, in block **820**, a DFAE learning process can include a two-step training process which can train a modality-specific feature extractor and feature-level data fusion solely based on a mixed loss in a back-propagation way, in accordance with aspects of the present invention. In an embodiment, a min-max problem between the modality-specific feature extractor and discriminator-based regularizer can be utilized to steer feature distribution learning towards the key modality. The corresponding optimization objective for this purpose can be expressed as:

$$\mathcal{L}_{adv} = \min_{\theta_e^v} \max_{\theta_d^v} \sum_{v=2}^{v} \mathbb{E}_{h^1 \sim p_1}\left[\log D_v\left(h^1\right)\right] + \mathbb{E}_{h^v \sim p_v}\left[\log\left(1 - D_v\left(h^v\right)\right)\right]$$

where h^1 ... and h^v represents the latent features, $D_V()$ represents a feature distribution function. It can be represented as a layer of neural network nodes and the node weights can be learned and/or adjusted through training. E () represents a function of expected output of the neural network given the latent features, in accordance with aspects of the present invention.

[0084] In some embodiments, to make the metric structures of different modalities reach the mutual agreements, the following loss can be imposed on a fusion module:

$$\mathcal{L}_{att} = \left\| \mathrm{K}^f - \mathrm{K}^c \right\|_F^2$$

Here, K^f and K^C represent the data metric in latent space:

$$K^v{}_{ij} = \exp\left(-\left\| h^v{}_i - h^v{}_j \right\|^2 / 2\sigma^2\right)$$

where K^f can be computed based on the fused features with Gaussian kernel and $K^c = \Sigma_v w_v K^v$. An extra effect of the above equation is that the weight can be further considered in metric level, resulting in increased reliability and accuracy of the fused results, in accordance with aspects of the present invention.

[0085] In some embodiments, cross-entropy loss L_{cro} can be utilized to measure the classification performance, in accordance with aspects of the present invention. In a first step, the modality-specific feature extractor and feature-level data fusion can be optimized by the L_{total} as follows:

$$\mathcal{L}_{total} = \mathcal{L}_{cro} + \mathcal{L}_{att} + \mathcal{L}_{adv}$$

[0086] In a second step, the training of the tree-organized neural networks can be performed, and the training can rely on data from a pre-trained modality-specific feature extractor. The neural network of each node can be initialized with the parameters of the modality-specific driving pattern classifier, which can be pre-trained before tree-organized neural networks training.

[0087] In various embodiments, the neural network of each node can be optimized to minimize the internal cross-entropy loss in a back-propagation way. For example, for node N_k^l, the internal cross-entropy can be calculated by:

$$\mathrm{Loss}\left(N_k^l\right) = -\sum_{i \in D} \left(y_i^{N_k^l} \log\left(p_i^{N_k^l}\right) + \left(1 - y_i^{N_k^l}\right) \log 1 - p_i^{N_k^l}\right)$$

where D represents a training set, $y_i^{N_k^l}$ represents the label (0 or 1) in the node N_k^l, and it can be the ground-truth whether a sample is in N_k^l and can be a binary label. In this way, the neural network in the tree-structure can be optimized node by node in block **822**, in accordance with aspects of the present invention. Operation (e.g., accelerate, brake, turn, etc.) of an autonomous vehicle can be controlled based on the scene probabilities determined by the feature level fusion and semantic level support in block **824**, in accordance with aspects of the present invention.

[0088] Referring now to FIG. **9**, a system **900** for data fusion and analysis of a plurality of different types of data from vehicle sensors for autonomous, semi-autonomous, and/or notification-assisted operation of a vehicle is illustratively depicted in accordance with embodiments of the present invention.

[0089] In some embodiments, one or more sensors **902** (e.g., smart sensors, cameras, IoT devices, etc.) can collect data, and data streams from the sensors **902** can be transmitted over a network **904** (e.g., wireless, CAN bus, LAN, WAN, wired, etc.), and can be analyzed using a processor device **914**, which can be deployed on a vehicle **916**, in accordance with aspects of the present invention. A feature extractor **906** can extract latent features from data received from the sensors **902**, and the latent features can be further processed by a feature level data fusion engine **908** and/or a semantic level support device **910** for further analysis, in accordance with aspects of the present invention.

[0090] In various embodiments, features (e.g., latent features) extracted and transmitted from the feature extractor can be regularized using a discriminator based regularizer **912**, and a modality specific driving pattern classifier **918** can determine and output driving patterns for further analysis using a tree-organized neural network **920** and/or a pattern analysis learning device **922**, in accordance with aspects of the present invention. One or more controller

devices **924** can be utilized to adjust any of a plurality of vehicle operations (e.g., accelerate, brake, lighting, etc.) responsive to a determination of a probability of one or more possible driving patterns and/or particular events during operation of a vehicle to improve autonomous navigation of the vehicle, in accordance with aspects of the present invention.

[0091] In the embodiment shown in FIG. **9**, the elements thereof are interconnected by a bus **901**. However, in other embodiments, other types of connections can also be used. Moreover, in an embodiment, at least one of the elements of system **900** is processor-based and/or a logic circuit and can include one or more processor devices **914**. Further, while one or more elements may be shown as separate elements, in other embodiments, these elements can be combined as one element. The converse is also applicable, where while one or more elements may be part of another element, in other embodiments, the one or more elements may be implemented as standalone elements. These and other variations of the elements of system **900** are readily determined by one of ordinary skill in the art, given the teachings of the present principles provided herein, while maintaining the spirit of the present principles.

[0092] Referring now to FIG. **10**, an exemplary system **1000** for an autonomous vehicle utilizing data fusion and analysis of a plurality of different types of data from vehicle sensors for autonomous, semi-autonomous, and/or notification-assisted operation of a vehicle is illustratively depicted in accordance with an embodiment of the present invention. The system **1000** can include an autonomous vehicle **12**. In one embodiment, the autonomous vehicle **12** can be an automobile. In other embodiments, the autonomous vehicle **12** can include a boat, plane, helicopter, truck, boat, etc. The autonomous vehicle **12** can include a propulsion system **18**. For an airborne embodiment, the propulsion system **18** can include propellers or other engines for flying the autonomous vehicle **12**. In another embodiment, the propulsion system **18** can include wheels or tracks. In another embodiment, the propulsion system **18** can include a jet engine or hover technology. The propulsion system **18** can include one or more motors, which can include an internal combustion engine, electric motor, etc.

[0093] The autonomous vehicle **12** can include a power source **20**. The power source **20** can include or employ one or more batteries, liquid fuel (e.g., gasoline, alcohol, diesel, etc.) or other energy sources. In another embodiment, the power source **20** can include one or more solar cells or one or more fuel cells. In another embodiment, the power source **20** can include combustive gas (e.g., hydrogen).

[0094] The autonomous vehicle **12** can be equipped with computing functions and controls. The autonomous vehicle **12** can include a processor **22**. The autonomous vehicle **12** can include a transceiver **24**. In one embodiment, the transceiver **24** can be coupled to a global position system (GPS) to generate and alert of a position of the autonomous vehicle **12** relative to other vehicles in a common coordinate system. The transceiver **24** can be equipped to communicate with a cellular network system. In this way, the autonomous vehicle's position can be computed based on triangulation between cell towers base upon signal strength or the like. The transceiver **24** can include a WIFI or equivalent radio system. The processor **22**, transceiver **24**, and location information can be utilized in a guidance control system **26** for the autonomous vehicle **12**.

[0095] The autonomous vehicle **12** can include memory storage **28**. The memory storage **28** can include solid state or soft storage and work in conjunction with other systems on the autonomous vehicle **12** to record data, run algorithms or programs, control the vehicle, etc. The memory storage **28** can include a Read Only Memory (ROM), random access memory (RAM), or any other type of memory useful for the present applications.

[0096] The autonomous vehicle **12** can include one or more sensors **14** (e.g., cameras, proximity sensors, LIDAR, radar, GPS, etc.) for collecting data of a plurality of different data types before, during, and/or after utilization of the autonomous vehicle **12**. The one or more sensors **14** can view the area surrounding the autonomous vehicle **12** to input sensor data into a Data Fusion and Analysis Engine **30** (DFAE) and the guidance control system **26** of the autonomous vehicle **12**. The one or more sensors **14** can detect objects around the autonomous vehicle **12**, e.g., other vehicles, building, light poles **16**, trees, etc. The data obtained by the one or more sensors **14** can be processed in the DFAE **30** of the autonomous vehicle **12** and can be utilized by the guidance control system **26** to, for example, adjust the propulsion system **18** of the autonomous vehicle **12** to avoid objects around the autonomous vehicle **12**, in accordance with various aspects of the present invention.

[0097] Reference in the specification to "one embodiment" or "an embodiment" of the present invention, as well as other variations thereof, means that a particular feature, structure, characteristic, and so forth described in connection with the embodiment is included in at least one embodiment of the present invention. Thus, the appearances of the phrase "in one embodiment" or "in an embodiment", as well any other variations, appearing in various places throughout the specification are not necessarily all referring to the same embodiment. However, it is to be appreciated that features of one or more embodiments can be combined given the teachings of the present invention provided herein.

[0098] It is to be appreciated that the use of any of the following "/", "and/or", and "at least one of", for example, in the cases of "A/B", "A and/or B" and "at least one of A and B", is intended to encompass the selection of the first listed option (A) only, or the selection of the second listed option (B) only, or the selection of both options (A and B). As a further example, in the cases of "A, B, and/or C" and "at least one of A, B, and C", such phrasing is intended to encompass the selection of the first listed option (A) only, or the selection of the second listed option (B) only, or the selection of the third listed option (C) only, or the selection of the first and the second listed options (A and B) only, or the selection of the first and third listed options (A and C) only, or the selection of the second and third listed options (B and C) only, or the selection of all three options (A and B and C). This may be extended for as many items listed.

[0099] The foregoing is to be understood as being in every respect illustrative and exemplary, but not restrictive, and the scope of the invention disclosed herein is not to be determined from the Detailed Description, but rather from the claims as interpreted according to the full breadth permitted by the patent laws. It is to be understood that the embodiments shown and described herein are only illustrative of the present invention and that those skilled in the art may implement various modifications without departing from the scope and spirit of the invention. Those skilled in the art could implement various other feature combinations with-

out departing from the scope and spirit of the invention. Having thus described aspects of the invention, with the details and particularity required by the patent laws, what is claimed and desired protected by Letters Patent is set forth in the appended claims.

What is claimed is:

1. A method for data fusion and analysis of vehicle sensor data, comprising:

receiving a multiple modality input data stream from a plurality of different types of vehicle sensors;

determining one or more latent features by extracting one or more modality-specific features from the input data stream;

aligning a distribution of the latent features of different modalities by feature-level data fusion;

determining classification probabilities for one or more of the latent features using a fused modality scene classifier;

training a tree-organized neural network to determine path probabilities and issue driving pattern judgments, the tree-organized neural network comprising a soft tree model and a hard decision leaf; and

issuing one or more driving pattern judgments based on a probability of possible driving patterns derived from the one or more modality-specific features.

2. The method as recited in claim **1**, wherein the aligning the distribution of the latent features comprises performing adversarial regularization on the distribution of the latent features using a discriminator-based regularizer.

3. The method as recited in claim **1**, wherein the fused modality scene classifier comprises two fully connected layers and a softmax layer.

4. The method as recited in claim **1**, wherein the tree organized neural network is configured for filtering impossible patterns from the driving pattern judgments.

5. The method as recited in claim **1**, wherein the constructing the tree-organized neural network comprises measuring a similarity between two latent features by an inner product after normalization as follows:

$$d\left(h_i^v, h_j^v\right) = Normalized\left[h_i^v\right] \cdot Normalized\left[h_j^v\right]$$

where d represents a dataset, h_i^vrepresents a first latent feature, and h_j^vrepresents a second latent feature.

6. The method as recited in claim **1**, wherein each node in the tree-organized neural network is a neural network, and the neural network of the each node is optimized by back-propagation to minimize internal cross-entropy loss.

7. The method as recited in claim **1**, wherein the aligning the distribution of the latent features of different modalities comprises regularizing using one or more discriminator-based regularizers, with each of the regularizers comprising three fully connected layers.

8. A system for data fusion and analysis of vehicle sensor data, comprising:

one or more processors operatively coupled to a non-transitory computer-readable storage medium, the processors being configured for:

receiving a multiple modality input data stream from a plurality of different types of vehicle sensors;

determining one or more latent features by extracting one or more modality-specific features from the input data stream;

aligning a distribution of the latent features of different modalities by feature-level data fusion;

determining classification probabilities for one or more of the latent features using a fused modality scene classifier;

training a tree-organized neural network to determine path probabilities and issue driving pattern judgments, the tree-organized neural network comprising a soft tree model and a hard decision leaf; and

issuing one or more driving pattern judgments based on a probability of possible driving patterns derived from the one or more modality-specific features.

9. The system as recited in claim **8**, wherein the aligning the distribution of the latent features comprises performing adversarial regularization on the distribution of the latent features using a discriminator-based regularizer.

10. The system as recited in claim **8**, wherein the fused modality scene classifier comprises two fully connected layers and a softmax layer.

11. The system as recited in claim **8**, wherein the tree organized neural network is configured for filtering impossible patterns from the driving pattern judgments.

12. The system as recited in claim **8**, wherein the constructing the tree-organized neural network comprises measuring a similarity between two latent features by an inner product after normalization as follows:

$$d\left(h_i^v, h_j^v\right) = Normalized\left[h_i^v\right] \cdot Normalized\left[h_j^v\right]$$

where d represents a dataset, h_i^vrepresents a first latent feature, and h_j^vrepresents a second latent feature.

13. The system as recited in claim **8**, wherein each node in the tree-organized neural network is a neural network, and the neural network of the each node is optimized by back-propagation to minimize internal cross-entropy loss.

14. The system as recited in claim **8**, wherein the aligning the distribution of the latent features of different modalities comprises regularizing using one or more discriminator-based regularizers, with each of the regularizers comprising three fully connected layers.

15. A non-transitory computer readable storage medium comprising a computer readable program operatively coupled to a processor device for data fusion and analysis of vehicle sensor data, wherein the computer readable program when executed on a computer causes the computer to perform the steps of:

receiving a multiple modality input data stream from a plurality of different types of vehicle sensors;

determining one or more latent features by extracting one or more modality-specific features from the input data stream;

aligning a distribution of the latent features of different modalities by feature-level data fusion;

determining classification probabilities for one or more of the latent features using a fused modality scene classifier;

training a tree-organized neural network to determine path probabilities and issue driving pattern judgments, the tree-organized neural network comprising a soft tree model and a hard decision leaf; and

issuing one or more driving pattern judgments based on a probability of possible driving patterns derived from the one or more modality-specific features.

16. The non-transitory computer readable storage medium as recited in claim **15**, wherein the aligning the distribution of

the latent features comprises performing adversarial regularization on the distribution of the latent features using a discriminator-based regularizer.

17. The non-transitory computer readable storage medium as recited in claim **15**, wherein the fused modality scene classifier comprises two fully connected layers and a softmax layer.

18. The non-transitory computer readable storage medium as recited in claim **15**, wherein the tree organized neural network is configured for filtering impossible patterns from the driving pattern judgments.

19. The non-transitory computer readable storage medium as recited in claim **15**, wherein the constructing the tree-organized neural network comprises measuring a similarity between two latent features by an inner product after normalization as follows:

$$d\left(h_i^v, h_j^v\right) = Normalized\left[h_i^v\right] \cdot Normalized\left[h_j^v\right]$$

where d represents a dataset, h_i^vrepresents a first latent feature, and h_j^vrepresents a second latent feature.

20. The non-transitory computer readable storage medium as recited in claim **15**, wherein the aligning the distribution of the latent features of different modalities comprises regularizing using one or more discriminator-based regularizers, with each of the regularizers comprising three fully connected layers.

* * * * *