United States Patent

Eshelman

[15] **3,699,943**

[45] **Oct. 24, 1972**

[54] THROTTLE RETURN SPRING REDUNDANCY SYSTEM

[72] Inventor: **Philip V. Eshelman,** 19417 Greenwald Drive, Southfield, Mich. 48075

[22] Filed: **June 7, 1971**

[21] Appl. No.: **150,670**

[52] **U.S. Cl.**.....**123/198 DB,** 123/142, 123/198 D, 180/82, 74/513

[51] **Int. Cl.**.....**F02b 77/08,** F02d 11/04, B60k 77/08

[58] **Field of Search**.....123/142, 198 D, 198 DB; 74/89.2, 96, 513; 180/82, 82.1, 82.7

[56] **References Cited**

UNITED STATES PATENTS

3,626,919 12/1971 MacMillan.....123/198 DB

Primary Examiner—Wendell E. Burns

Attorney—Walter Potoroka, Sr.

[57] **ABSTRACT**

A throttle valve, situated within the induction passage of a fuel or air induction device, is carried by a throttle shaft for rotation therewith; a lever fixedly connected to the throttle shaft is operatively to a remotely situated operator's foot-operated throttle control; a first throttle return spring is operatively connected to the first lever for returning the throttle valve to an idle position whenever the foot-operated throttle control is released; a second safety spring is provided for assuring the movement of the throttle valve to the idle position in the event that, for example, either the first throttle return spring or the associated throttle control linkage should fail while the throttle valve is in either a partly or fully opened position; the manually operated throttle control being effective to force opening movement of the throttle valve against the resilient resistance of the second safety spring.

7 Claims, 4 Drawing Figures

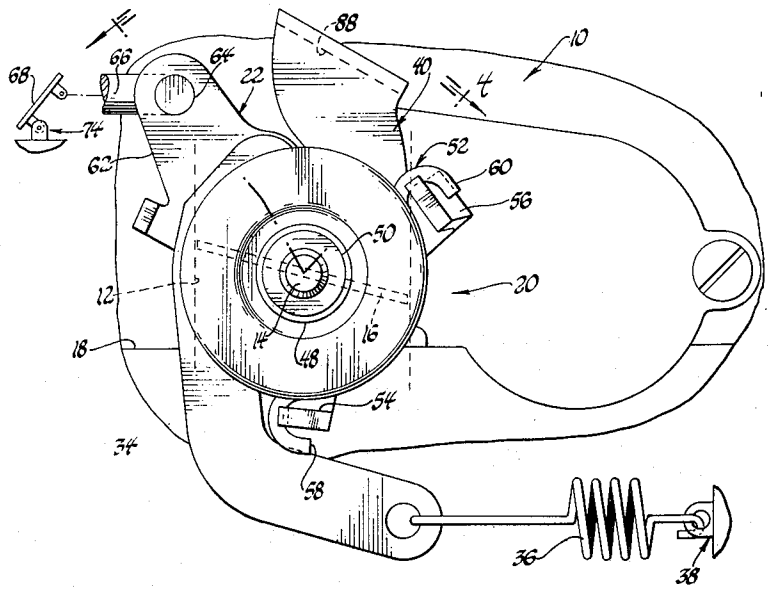

PATENTED OCT 24 1972 3,699,943

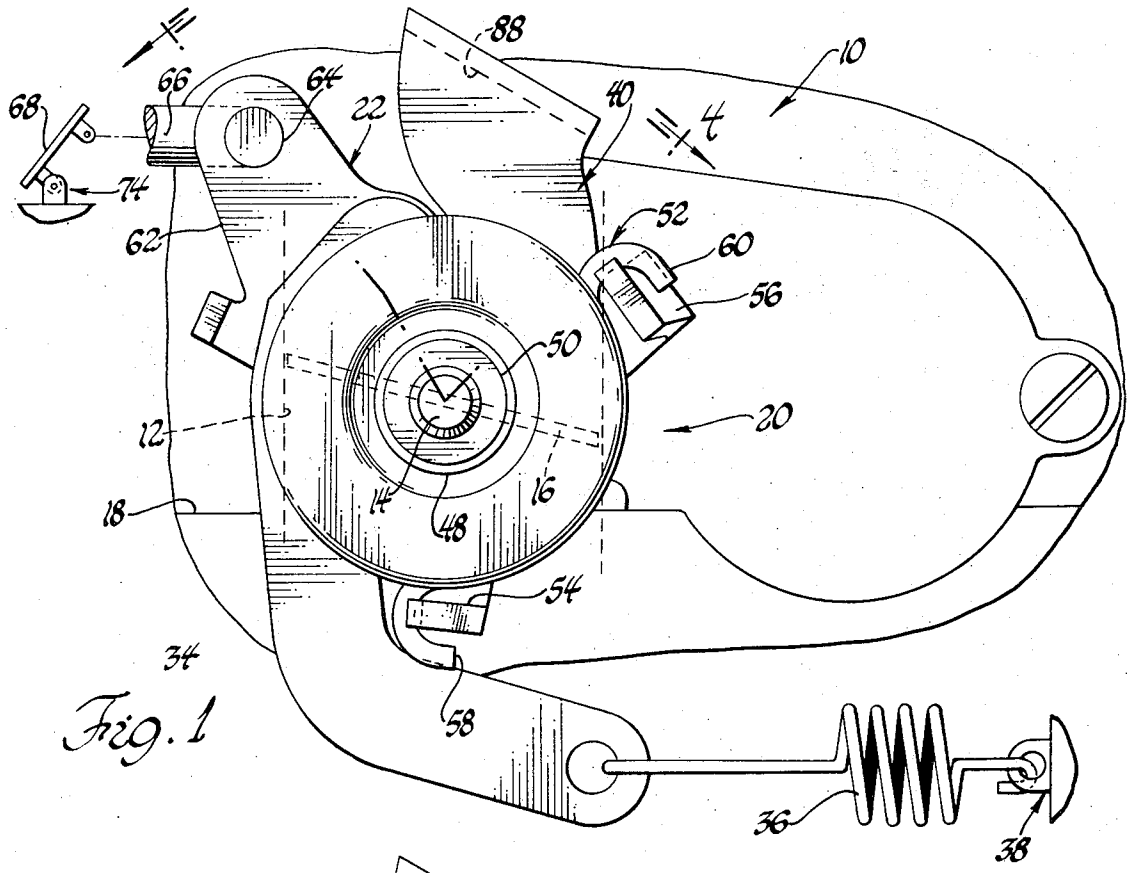

Fig. 1

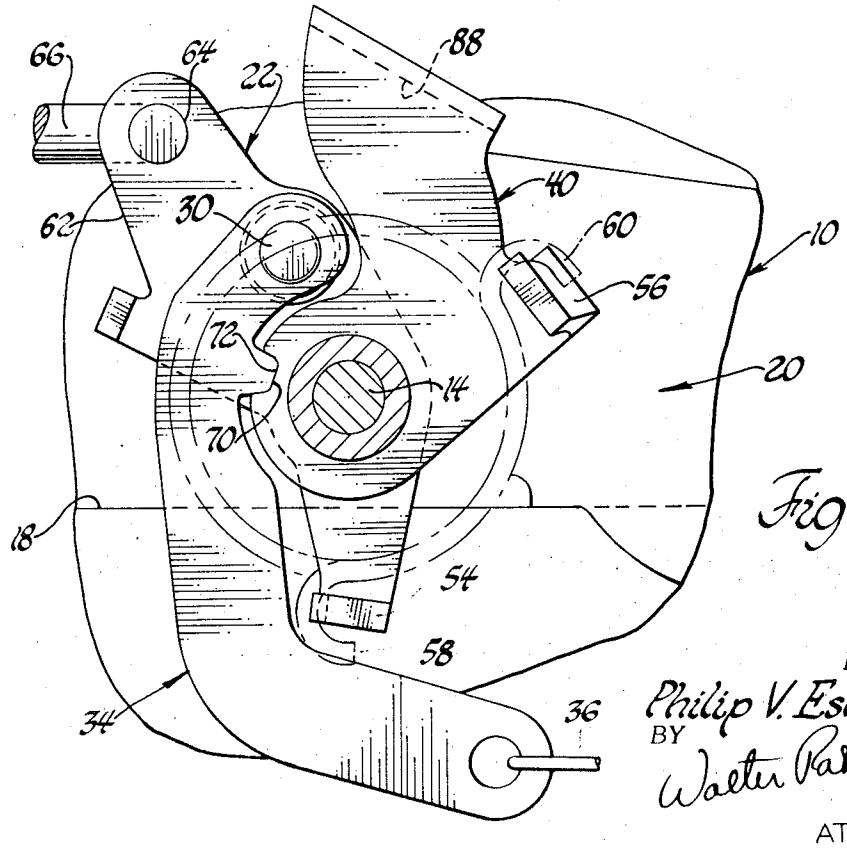

Fig. 2

INVENTOR.
Philip V. Eshelman
BY
Walter Patronaba, Jr.
ATTORNEY

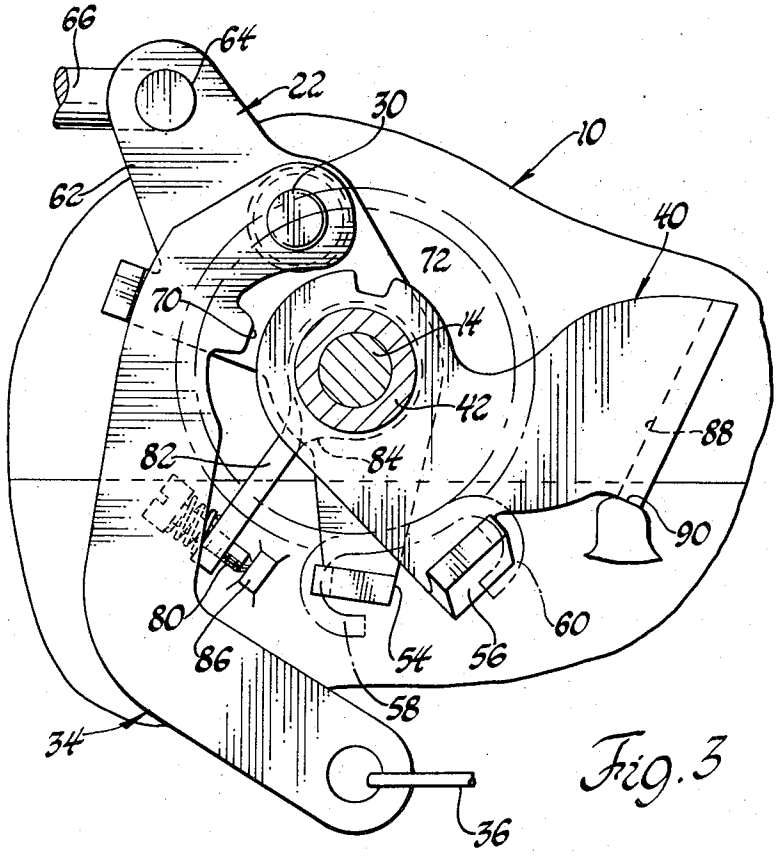

Fig. 3

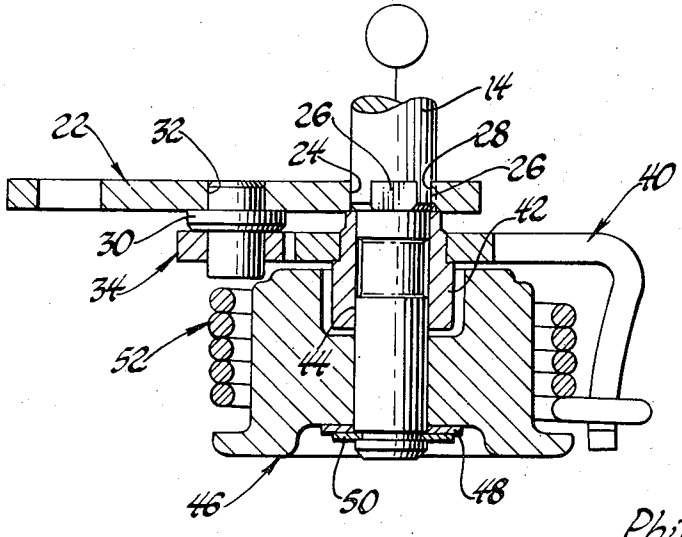

Fig. 4

INVENTOR.
Philip V. Eshelman
BY
Walter Patronka, Jr.
ATTORNEY

THROTTLE RETURN SPRING REDUNDANCY SYSTEM

BACKGROUND OF THE INVENTION

Heretofore, carburetors or other engine induction devices employing an induction passage with a throttle valve therein, had a lever fixed to the throttle shaft which lever, in turn, was operatively connected to associated throttle control linkage (as the vehicle operator's foot-controlled throttle pedal within the vehicle passenger compartment) and to a return spring for returning the throttle valve to an engine idle position when control over the throttle had been relinquished by the vehicle operator.

Even though such carburetors and induction devices have performed well in the past and have not shown any tendency to experience failure of such a throttle return spring or the associated throttle control linkage, the Federal Government has, nevertheless, recently issued new proposed safety standards in regard to driver-operated throttle or "accelerator" control systems.

Such standards, among other things, require that: (1) in the event the normal or usual throttle return spring should fail, means must be provided for assuring that the throttle valve will return to its idle position; (2) in the event the associated throttle control linkage should fail, means must be provided for assuring that the throttle valve will return to its idle position; and (3) the vehicle operator must still be able to exercise a degree of control over the position of the throttle valve with the occurrence of the events set forth in (1) and (2), above.

Accordingly, the invention as herein disclosed is primarily concerned with the solution of the above as well as other related problems.

SUMMARY OF THE INVENTION

According to the invention, an automatic throttle return device comprises a first lever adapted for connection to an associated throttle shaft and throttle valve for rotation therewith, first spring means for rotating said first lever and throttle valve to an idle position during normal operating conditions, second safety spring means energized upon failure of said first spring means for assuring rotation of said first lever and said throttle valve to said idle position, and manually actuated lever means effective for causing opening movement of the throttle valve against the resistance of the second safety spring means upon failure of the first spring means.

DESCRIPTION OF THE DRAWINGS

In the drawings wherein, for purposes of clarity, certain details and elements may be omitted from one or more views:

FIG. 1 is a fragmentary elevational view of a carburetor or other induction device equipped with a throttle control embodying the invention;

FIG. 2 is a view similar to FIG. 1 with certain elements shown in FIG. 1 removed for purposes of clarity and showing remaining elements in positions corresponding to normal operation;

FIG. 3 is a view similar to FIG. 2 but illustrating the elements in positions assumed resulting from a failure of the normal throttle return spring; and

FIG. 4 is a cross-sectional view taken generally on the plane of line 4—4 of FIG. 1 and looking in the direction of the arrows.

DESCRIPTION OF THE PREFERRED EMBODIMENTS

Referring now in greater detail to the drawings, FIG. 1 illustrates a fragmentary portion of a carburetor **10** having an induction passage **12** formed therethrough with a journalled throttle shaft **14** extending transversely through the induction passage or bore **12**. A throttle valve **16**, situated within the induction passage **12**, is suitably fixedly secured to and carried by throttle shaft **14** for rotation therewith within the induction passage for controlling flow therethrough to the related engine **18**.

The throttle return device **20**, referring in particular to FIG. **1** and **4**, is shown as being comprised of a first lever **22** having a mounting aperture **24** by which it is mounted onto throttle shaft **14** and secured thereto for rotation therewith as by keying flatted portions **26** formed on the shaft **14** and cooperating flatted portions **28** formed in the aperture **24** of lever **22**. A pivot pin **30**, which may be pressed into an aperture **32** of lever **22** as to be secured thereto, pivotally supports a latching lever **34** which, in turn, as shown in FIGS. **1**, **2** and **3**, has its other end operatively connected to a throttle return tension spring **36** having its opposite end suitably anchored as at **38**.

A second latching or throttle control lever **40** is preferably fixedly secured to a bushing **42** which, in turn, is freely received on a necked-down portion **44** of throttle shaft **14** so as to be rotatable with respect thereto. A drum-like member **46** is also freely journalled on the reduced diameter **44** of shaft **14** and axially retained thereon as by a washer or thrust bearing **48** and a C-clip **50**. The drum **46** serves to generally carry and retain a coiled torsion safety spring **52** thereabout.

As shown in FIGS. **1**, **2** and **3**, levers **22** and **40** are respectively provided with generally laterally extending arm portions **54** and **56** to which are operatively connected hooked ends **58** and **60** of torsion spring **52** so as to result in lever **22** being urged counter-clockwise and lever **40** being urged clockwise.

Another arm portion **62** of lever **22** is pivotally connected to one end **64** of a motion transmitting member such as a rod **66** which, in turn, is operatively connected as to the foot operated throttle control lever or pedal **68** within the vehicle engine compartment.

As best seen in FIG. **4**, the main body portions of levers **34** and **40** are substantially in the same plane. This is done to enable such levers to coact with each other as by having a tongue-like latching projection **70**, formed on lever **34**, received within a cooperating recess or slot **72** formed in lever **40**.

For the moment neglecting the latching projection **70** and recess **72**, it can be seen that the only lever which is in any way fixed or secured for driving rotation of the throttle valve **16** is lever **22** because lever **40** is rotatable with respect to throttle shaft **14** and lever **34** is pivotally carried by lever **22**.

OPERATION OF THE INVENTION

For purposes of description, let it be first assumed that the elements are in the respective positions as shown in FIGS. 1 and 2. At this time the throttle valve 16 will be in the nominally closed or idle position within induction passage 14 as generally depicted in, for example, FIG. 1. Also, as illustrated in FIG. 2, the torsion safety spring 52 is urging the levers 22 and 40 in the directions previously described but is precluded from so moving the levers because of projection 70 being engaged within latching recess 72. This engagement between member 70 and latching recess 72 is maintained by the spring 36 which also serves to provide the force for returning the throttle shaft 14 and throttle valve 16 to the idle position.

During normal operation when opening movement of the throttle valve 16 is desired, foot-operated throttle pedal 68 is rotated clockwise about its pivot support 74 causing rod or linkage means 66 to move to the right causing clockwise rotation of lever 22 which, because of it being fixedly or drivingly secured to shaft 14, causes clockwise rotation of throttle shaft 14 with throttle valve 16 thereby being rotated in the opening direction. Levers 34 and 40, being held in latched engagement to each other through the resilient effect of return spring 36, are also rotated clockwise through motion transmitted from lever 22 to latching lever 34 via pivot connection 30.

When throttle control pedal 68 is released, the return spring 36 pulls at the lower end of lever 34 causing counter-clockwise rotation of levers 40 and 22. This, in turn, results in throttle shaft 14 also being turned counter-clockwise with throttle valve 16 being returned to idle position.

Further, as is generally well known in the art, a suitable throttle stop screw 80 may be provided as generally depicted in FIG. 3. The screw 80 may be threadably carried by an arm portion 82 of a lever-like member 84 suitably fixedly secured to the throttle shaft 14 so as to rotate therewith. The purpose of such a stop screw is, of course, to coact with a suitable abutment 86 and in so doing determine the idle position of the throttle valve 16.

Let it now be assumed that throttle rod or linkage 66 has caused clockwise rotation of levers 40, 34 and 22 to a position where, for example, the throttle valve 16 is approaching a wide open position. Further, let it be assumed that at that moment the throttle return spring 36 breaks or in some way fails. If this were to happen, the force previously exerted by spring 36, holding detent or latching lever 34 in latched engagement with lever 40, would be eliminated causing levers 40 and 34 to become disengaged from each other. That is, referring to FIGS. 2 and 3, it can be seen that in the preferred embodiment of the invention, the sides of the notch or slot 72 are made slightly tapered as are the juxtaposed sides of the latching projection 70. Consequently, the torsional force of torsion spring 52 continually urges the projection 70 out of seated engagement with the slot or recess 72. However, in normal operation return spring 36 provides enough force to prevent disengagement between latching portions 70 and 72. Therefore, if return spring 36 should fail, the force of torsion spring 52 forces the latch tongue 70 out of engagement with latch slot 72.

With the latching means thusly disengaged, torsion spring 52, through its end 60 engaged with arm 56 of lever 40, causes lever 40 to rotate clockwise until a transverse arm portion 88 of lever 40 strikes and abuts against an abutment portion 90 which may be a fixed abutment carried by the carburetor 10 to determine the maximum throttle opening of throttle 16. Once lever 40 is thusly brought to rest against abutment 90, the torsion spring through its end 58 engaged with arm 54 of lever 22 continues to urge lever 22 and throttle shaft 14 in a counter-clockwise direction or towards a closed (idle) throttle position of FIG. 1 as determined, for example, by the idle stop screw 80 of FIG. 3.

It should be remembered that lever 22 is fixed to throttle shaft 14 so that rotation of one causes rotation of the other. Therefore, it will be observed that when return spring 36 has failed torsion spring 52 will return the throttle valve 16 to its idle position whenever control over the throttle valve 16 is relinquished by the operator as by releasing the throttle pedal or lever 68 of FIG. 1.

In view of the above, it can be seen that if the normal throttle return 36 should fail the safety torsion spring 52 automatically assumes the function of providing a resilient force urging the throttle valve 16 towards a closed or idle position while still permitting the operator to continue exercising control over the opening of the throttle valve. However, the invention as herein disclosed contemplates an additional benefit. That is, the safety spring 52 is preferably selected as to have a spring rate and preload force of such magnitude as to thereby exhibit a decidedly increased resistance toward opening movement of the throttle valve 16 as compared to the resistance offered by the normal throttle return spring 36.

For example, the safety spring 52 may be of such a spring rate and preload force as to, when actuated and released in the manner described above, require twice as much effort on the part of the vehicle operator to move the throttle valve 16 in the opening direction as compared to the resilient resistive force of the normal throttle return spring. Therefore, whenever, the normal return spring 36 fails and the safety spring 52 assumes the function of being a throttle return spring, the vehicle operator is immediately placed on notice, by virtue of the increased effort required of him, that something has "gone wrong" with his throttle control system and will therefore seek the assistance of qualified personnel for inspection and corrective maintenance of the vehicle.

Although only one preferred embodiment of the invention has been disclosed and described it should be apparent that other embodiments and modifications of the invention are possible within the scope of the appended claims.

I claim:

1. Apparatus for assuring the return of a throttle valve from a partly opened or fully opened position to an idle position, comprising a shaft rotatable in accordance with the rotation of said throttle valve, first manually actuated throttle control linkage means operatively connected to said shaft for at times causing rotation of said shaft and said throttle valve in a throttle opening direction, first spring means reacting against a first abutment and operatively connected to said shaft

and throttle valve for applying a first resilient force thereagainst in a direction opposite to said throttle opening direction in order to at times rotate said shaft and said throttle valve to said idle position, and second resilient means effective upon the occurrence of a failure in said first spring means to automatically react against a second abutment for urging said shaft and throttle valve to be rotated in a direction toward said idle position.

2. Apparatus according to claim 1, including latching means normally effective for preventing said second resilient means from reacting against said second abutment, said latching means becoming disengaged and ineffective for preventing said second resilient means from reacting against said second abutment when said first spring means experiences a failure.

3. Apparatus according to claim 1, wherein said second resilient means has a substantially greater preload force than said first spring means and a substantially lesser spring rate than said first spring means.

4. Apparatus according to claim 1, where in said first manually actuated throttle control linkage means comprises a first lever connected to said shaft for driving rotation therewith, including a second lever freely journalled with respect to said shaft, wherein said second resilient means is operatively connected to said first lever and said second lever so as continually urge said second lever to rotate with respect to said first lever and said shaft, detent means for normally preventing said second lever from rotating with respect to said first lever, wherein said first spring means is effective for maintaining said detent means engaged thereby preventing said second lever from rotating with respect to said first lever, said detent means becoming disengaged upon failure of said first spring means thereby permitting said second resilient means to rotate said second lever against said second abutment and thereby react to resiliently urge said first lever said shaft and said throttle valve toward said idle position.

5. Apparatus according to claim 4, wherein said second resilient means comprises a coiled torsion spring having first and second arm portions respectively engaging said first lever and said second lever, wherein said detent means comprises a third pivotally supported lever translationally carried by said shaft, a first detent portion formed on said third lever adapted for operative engagement with a second detent portion carried by said second lever, and wherein said first spring means normally urges said first and second detent portions into engagement with each other.

6. Apparatus according to claim 5, wherein said third lever is pivotally connected to said first lever, wherein said first detent portion comprises a tongue-like projection, and wherein said second detent portion comprises a generally radially directed slot formed in said second lever for receiving said tongue-like projection.

7. Apparatus according to claim 6, wherein said tongue-like projection has a first cam-like surface, wherein said radially directed slot has a second cam-like surface, said first and second cam-like surfaces being juxtaposed and engaged whenever said tongue-like projection is received and retained in said slot, and wherein said coiled torsion spring through its continued urging or rotation of said second lever causes said second cam-like surface to urge said first cam-like surface and said tongue-like projection out of said slot.

* * * * *