Feb. 13, 1945. W. FEILER 2,369,551

ATTACHMENT TO STAMPING MACHINES OR THE LIKE FOR HOLDING AND FEEDING STRIPS

Filed April 14, 1943 3 Sheets-Sheet 1

Fig. 1.

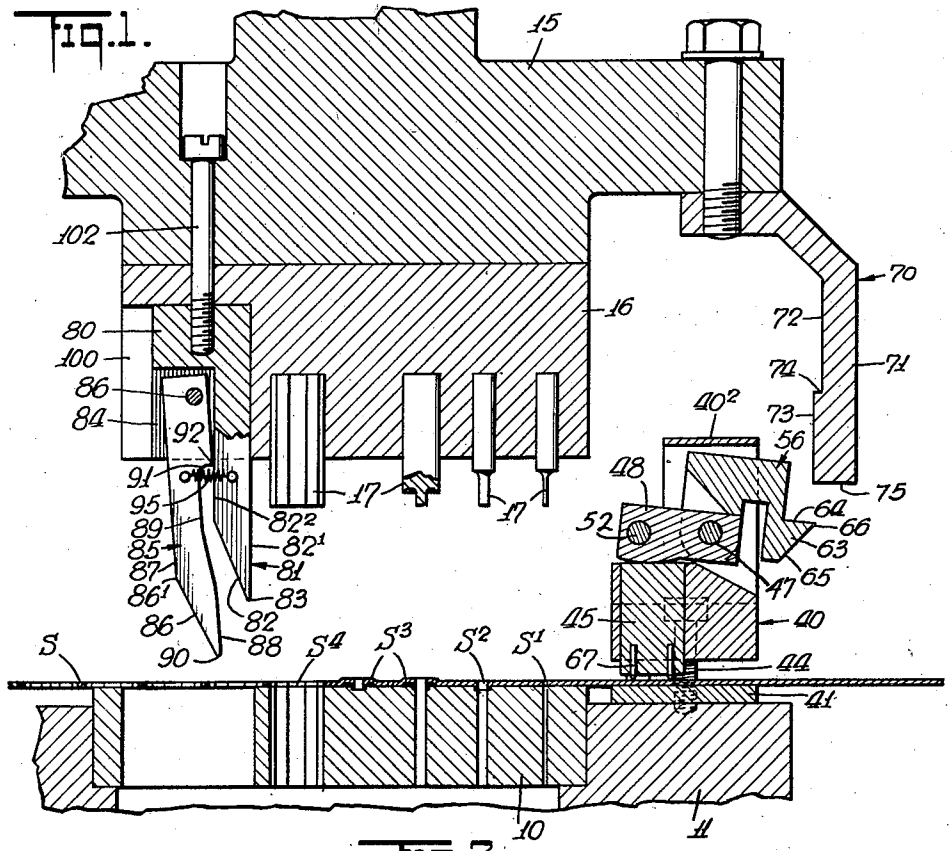

Fig. 2.

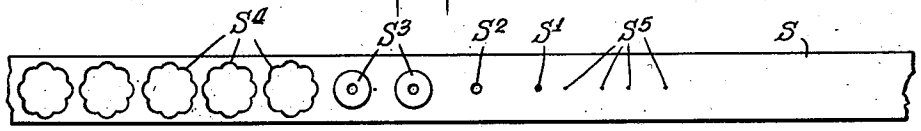

Fig. 3.

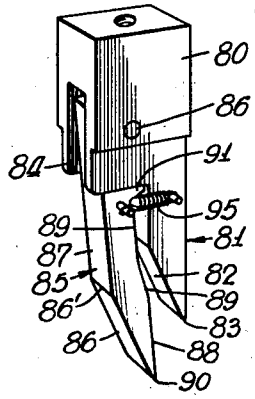

INVENTOR
William Feiler
BY Glück & Breitfeld
ATTORNEY

Feb. 13, 1945. W. FEILER 2,369,551

ATTACHMENT TO STAMPING MACHINES OR THE LIKE FOR HOLDING AND FEEDING STRIPS

Filed April 14, 1943 3 Sheets-Sheet 2

FIG. 4.

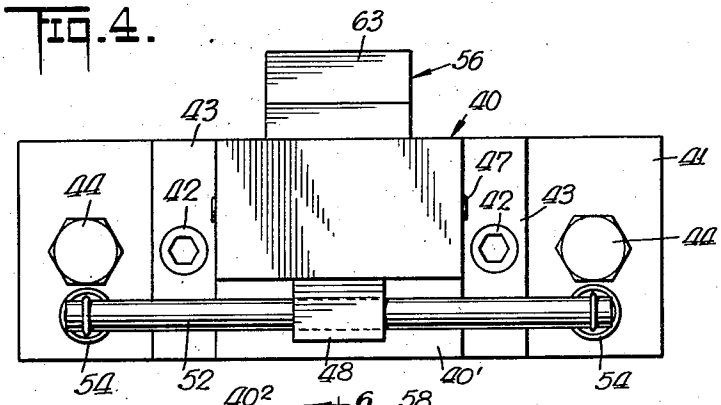

FIG. 5.

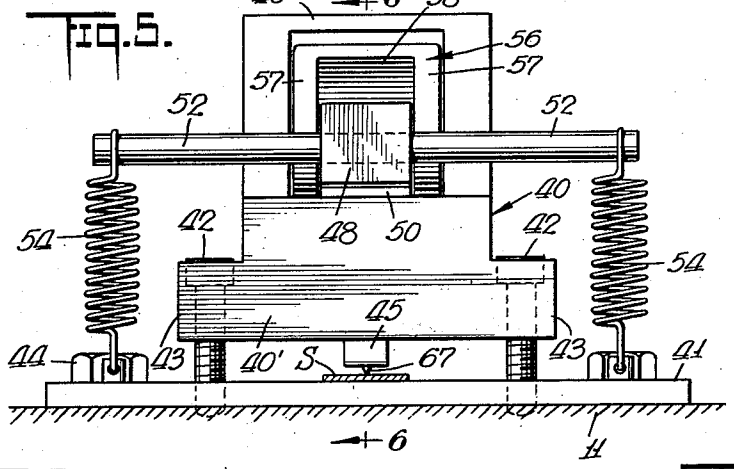

FIG. 6.

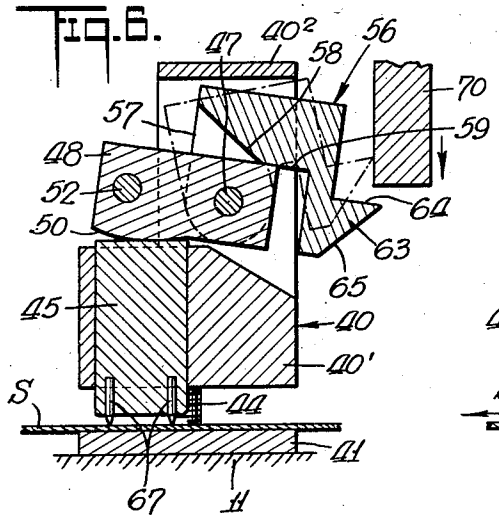

FIG. 7.

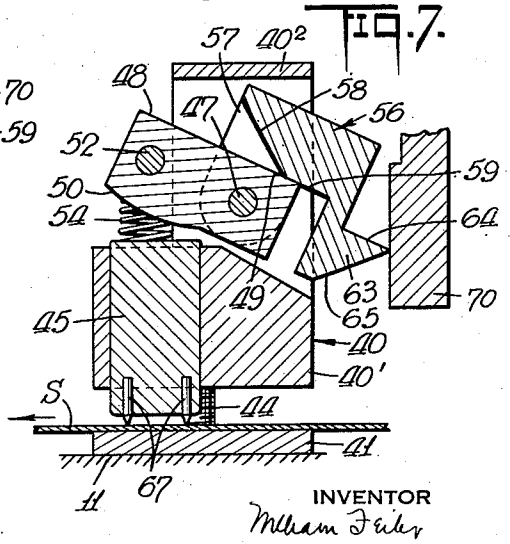

INVENTOR

William Feiler

BY Glueck & Breitenfeld

ATTORNEY

43-28

Feb. 13, 1945. W. FEILER 2,369,551

ATTACHMENT TO STAMPING MACHINES OR THE LIKE FOR HOLDING AND FEEDING STRIPS

Filed April 14, 1943 3 Sheets-Sheet 3

Fig. 8.

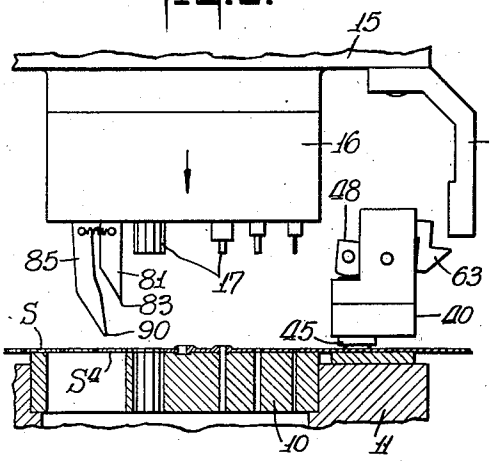

Fig. 11.

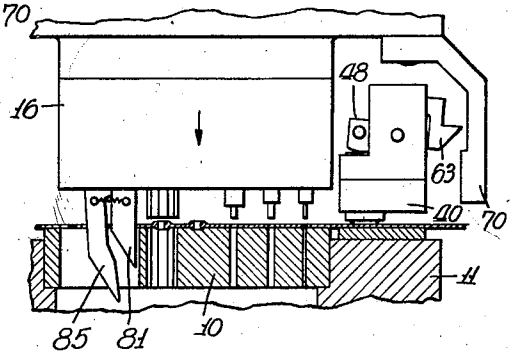

Fig. 9.

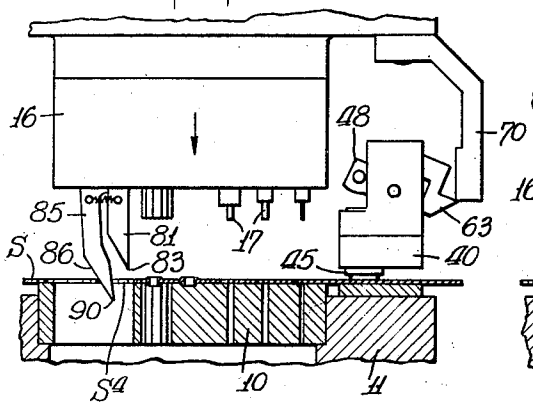

Fig. 12.

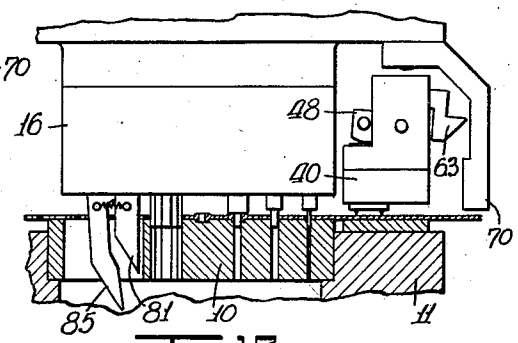

Fig. 10.

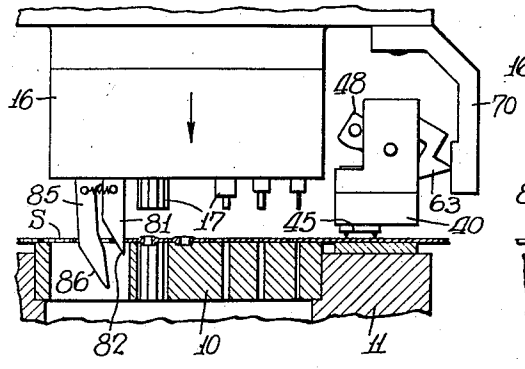

Fig. 13.

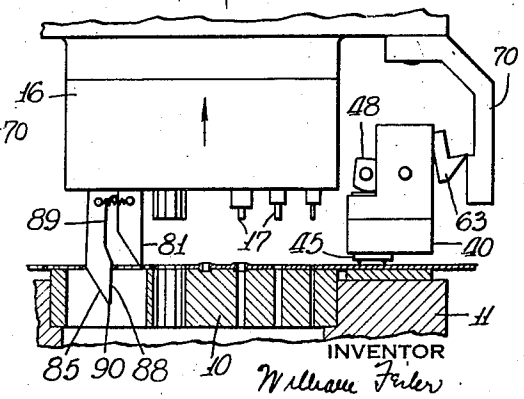

INVENTOR
William Feiler
BY Glucksberg
ATTORNEY

Patented Feb. 13, 1945 2,369,551

UNITED STATES PATENT OFFICE

2,369,551

ATTACHMENT TO STAMPING MACHINES OR THE LIKE FOR HOLDING AND FEEDING STRIPS

William Feiler, West New York, N. J., assignor to Arrow Manufacturing Company Incorporated, Hoboken, N. J., a corporation of New Jersey

Application April 14, 1943, Serial No. 483,044

27 Claims. (Cl. 164—88)

My present invention relates to attachments to a stamping machine or the like for controlling and positioning a strip of material for the stamping performance.

I have illustrated my invention as embodied in or as associated with a stamping apparatus of the type wherein the stamping tool or die is moved down upon the work for the stamping operation, then upwardly to its starting position to complete a cycle which cycle is repeated for each successive stamping operation. This has been done for convenience of disclosure, it being understood that my invention can be usefully applied to other types of apparatus.

One of the general objects of my invention is an effective arrangement for positively locking a strip against movement.

Another object of my invention is an arrangement for use with a stamping mechanism or the like for locking a strip against any movement while it is being stamped and more particularly an improved arrangement whereby the strip may be released for a feeding movement in timed relation to the stamping.

Another object of my invention is an improved arrangement whereby a step by step feed of a strip of material is effected through an engagement with openings formed in the strip.

Another object of my invention is an improved attachment to a stamping mechanism or the like whereby an opening left in the strip by a stamping operation is engaged to bring a new increment of the strip into position for a further stamping operation.

Another object of my invention is an improved arrangement whereby a strip locking means and a strip feed means are so coordinated and related that the strip locking means is rendered inoperative to lock the strip when the strip feeding means becomes active to feed the strip.

Another object of my invention is an improved arrangement of a strip locking means, a strip feed means and an apparatus for performing its operation upon the strip which are so coordinated that the locking means are inoperative only when the feeding means are operative and the stamping means is out of engagement with the strip.

Among the more important provisions for the attainment of these objects are:

Means for locking a metal strip against movement comprising pointed pins of relatively hard material and means for applying them to a strip of relatively softer material with sufficient force to cause them to pin prick the surface of the strip; means for locking a strip against movement comprising a pivoted pressure applying member and a releasing trigger both mounted about a common pivot to gravitate thereabout in opposite directions; spring pressure releasing means comprising a presser bar pivoted at one end and engaged at its other end by a spring to apply pressure and a pivotally mounted trigger for releasing said spring pressure mounted by a movement about its pivot to cause it to swing said presser bar about its pivot; an attachment to an apparatus having a cycle of movement for the performance of an operation upon a strip of material, comprising pressure means for engaging and locking the strip against movement and means for relieving said pressure means automatically operated in timed relation to the operation of the apparatus; means for feeding a strip provided with openings therethrough comprising a camming finger and means for moving the finger into an opening in the strip in a direction transversely thereof to give the strip a camming feed; an arrangement for feeding a strip having openings therein comprising a plurality of fingers each having a camming surface thereon and means for causing one finger to engage through an opening to give the strip an increment of movement and for then causing the other finger to engage an adjacent opening to give it a further increment of movement; an arrangement for feeding a strip having openings therein comprising a fixed finger and a movable finger each provided with a camming surface and means for causing the pivoted finger to engage through an opening to give the strip an increment of movement and for then causing the other finger to engage an adjacent opening to give the strip a further increment of movement and for then causing the pivoted finger to move into closer adjacency to the other finger; an attachment to a machine having a tool which cuts openings in the strip of material, said attachment comprising a finger movable downwardly and in advance of the tool to engage an opening already formed in the strip to give the strip an increment of movement to present a new length thereof to the tool and more particularly comprising a second finger to engage an adjacent opening after the first finger has moved the strip, to give the strip a further movement.

For the attainment of these objects and such other objects as may hereinafter appear or be pointed out I have illustrated one embodiment of my invention in the drawings, wherein:

Figure 1 is a vertical section through the ap-

paratus upon which the stamping operations have been performed;

Figure 2 is a top plan view of the strip shown in Figure 1;

Figure 3 is a perspective view of the attachment for giving the strip a progressive step by step movement;

Figure 4 is a top plan view of the strip holding attachment;

Figure 5 is a side elevational view of the holding attachment;

Figure 6 is a section taken on line 6—6 of Figure 5 looking in the direction of the arrows and showing one position of the parts;

Figure 7 is a section similar to Figure 6 showing another position of the parts; and

Figures 8 to 13 inclusive are views of the die stamping mechanism as it moves progressively from its top position of Figure 1 through a complate cycle back to that position.

Before describing details of construction of the disclosed embodiment I will premise that I have disclosed my invention as employed in connection with stamping operations upon a strip S of material such as brass positioned on a bed plate 10 of the body 11 of a stamping apparatus comprising a head 15 moved downwardly by mechanism not shown, and which carries with it the carrier 16 in which are mounted such tools or dies 17 of a number and character as are desired or required, to cause these tools or dies to engage the strip S and to perform their intended operation thereon. The cycle of movement of the parts 15, 16 and 17 comprises a progressive movement from the uppermost or starting position donwardly toward strip S until engagement is effected therewith for a performance thereon and then a progressive return of these parts to their starting position.

I will premise further that I have illustrated this stamping apparatus as employing a plurality of tools 17 which operate successively upon an area to form first the small openings S′ and then the depressed flanges S^2 and then the annular elevation S^3 and then to cut out the treated area to leave the openings such as shown at S^4. I will here point out that this is merely an exemplary procedure and is significant only as to the last step wherein areas of the strip are removed to leave opening S^4 by the operation of the tool member 17 at the extreme left in Figure 1 and even here it is significant only as to one aspect of my invention.

My invention relates in one of its aspects to a mechanism for holding the strip of material against movement for treatment of an area thereof and more particularly a manner of controlling that mechanism in timed relation to the functioning of the apparatus whereby the strip is so treated and in the specific embodiment illustrated in timed relation to the movement of the dies of a stamping apparatus; in another aspect it relates to a mechanism for giving the strip with areas removed which leave openings, a step by step feed effected through these openings to bring new increments of its length into the operative position for successive operations by an apparatus and more particularly to the association of such mechanism with an apparatus which removes these areas and to the control of the feeding mechanism in timed relation to the functioning of that apparatus; in still another aspect it relates to the timing of the control of the strip holding mechanism and the strip feeding mechanism so that the strip feeding mechanism functions during that period when the control of the strip holding mechanism releases the strip to permit it to be moved by the strip feeding mechanism and more particularly to the coordination of the timing of the two to each other with that of an apparatus such as is here disclosed.

I will now describe a mechanism in accordance with my invention for holding the material in position for treatment by an apparatus of which a stamping mechanism is an example by reference first to the Figures 1, 5 and 7 of the drawings wherein it will be observed that a casing or base member 40 is secured to a base plate 41 in any preferred or desired manner as by members 42 which engage vertically through the lateral enlargements or flanges 43 of casing 40. This securement is illustrated in the drawings as effected by a threaded engagement of the members 42 with the casing 40 and the base plate 41. This securement may be effected in any desired way, it being merely the intention that the casing or holder 40 and the base plate 41 be assembled together as a unit to form an attachment to the apparatus illustrated in a preferred practice of my invention as a stamping machine. This attachment is effected by securing the base plate 41 on the body 11 of the stamping machine in any preferred or desired manner as for example by a screw or screws 44 (see Figure 1).

The casing or holder 40 is comprised of a lower base portion 40′ which is illustrated as relatively solid except as shortly to be indicated and the relatively narrower U-shaped portion 40^2 extending upwardly therefrom as clearly shown in Figures 5 and 6. A plunger 45 of greater height or length than the height of the base portion 40′ is received vertically therethrough. This plunger 45 fits snugly within said opening but the fit is such that the plunger 45 is free to gravitate and where vertically positioned as in Figure 1 will gravitate downwardly as far as is permitted and in Figure 1 into engagement with strip S on the plate 41.

Carried from the opposite legs of the U-shaped portion 40^2 of the casing is a pivot pin or rod 47 upon which is mounted between said legs a presser bar 48, it being observed upon viewing the various figures that this presser bar is carried about the pivot 47 adjacent one of its ends so that the other end will normally gravitate downwardly counterclockwise and the parts are so dimensioned and related that this normal counterclockwise gravitating movement will cause the lower surface 50 of this free end to engage with and rest upon the top of the plunger 45. To permit this engagement to be effected without interference by the walls of the casing 40 which encompass the plunger 45, this engaging surface 50 is curved convexly as shown more clearly in Figures 1 and 6 and is limited in length and width to cause a manner of engagement which can be termed a wiping engagement thereof with the top surface of plunger 45.

A bar or rod 52 is received through the free or outer end of the presser bar 48. This rod or bar 52 is shown as extending laterally beyond both ends of the casing 40 to clear it and to permit of the engagement with these ends of members 54 which apply a downward spring pressure to the rods 52 and therefore to the free ends of the presser bar 48. In the illustrated embodiment these members 54 are shown as spiral springs engaged at their upper end with the opposite ends of the bars and engaged at their lower ends with

the base plate 41 in any preferred or desired manner as for example that shown in Figure 5.

A trigger member 56 is also mounted for swinging movement in the U-shaped portion 40' of the casing 40. In the illustrated embodiment this is shown as effected by spaced apart legs 57 which depend from trigger member 56 and straddle the inner or pivoted end of the presser bar 48. These legs 57 are mounted to swing freely around the pivoted pin or rod 47 so that both the presser bar 48 and trigger 56 are pivoted to swing about a common axis.

For an understanding of the manner in which the trigger 56 cooperates with the presser bar 48, attention is invited to the fact that the trigger member 56 has its lower surface defined in part by the inclined portion 58, and in part by the relatively horizontal portion 59 which in the normal position of the parts shown in Figure 1, is parallel to and overlaps the top surface 49 of the presser bar 48.

The trigger member is pivoted off its center of gravity so that it will normally gravitate clockwise whereas as stated the presser 48 gravitates counterclockwise. This action will bring these two members to a normal position and relation shown in Figure 1 with the surfaces 59 and 49 in parallelism and in engagement and the dimension and contours are preferably designed to that end. However, the trigger 56 in the position of the parts of Figure 1 can readily be swung counterclockwise about its pivot 47 until its top surface engages the top of the U-shaped part 40' of the casing 40 without effecting the position of the presser bar. This position is shown in dotted lines in Figure 6. The trigger 56 can also be swung clockwise but in so doing must swing with it the presser bar 48 clockwise also which requires a sufficient force to overcome also the pressure of the springs 54.

I will here point out that the dominant force that determines the position of the parts thus far described, are the springs 54 which apply a force many times greater than any gravity force applied by the presser bar 48 or the trigger 56 so that the position of the parts of the mechanism just described is determined primarily by this spring pressure to cause them to assume the position of Figure 1 where the presser bar applies the relatively large pressure of the springs to the plunger 45 to force that plunger down into engagement with the work or strip S as shown in Figure 1.

The plunger 45 is shown as carrying two pins 67 sharply pointed at their lower edge which project below the bottom of plunger 45. These pins are preferably made of an extremely hard and wear-resisting material and are sharply pointed. The material of which the strip S is formed is relatively soft as compared to the hardness of the pins 67. Brass is an example. The pressure applied to these points by springs 54 is quite large and sufficient to cause these pins to indent and pin prick the strip at the points of engagement and I have indicated these pin pricks in Figure 2 by the reference character S^5. Further reference will be made to the purpose served by such pin pricking of the material.

The trigger 56 is contoured, dimensioned and located so that its forward or right end in Figure 1 projects beyond casing 40. Projecting from the lower end of this projecting part is the trigger tooth 63 which is defined by upper surface 64 which is relatively horizontal and the lower surface 65 which is inclined to provide the tooth with the apex 66.

Associated with a movable element of the stamping machine apparatus such as the main support 15 to move therewith, is a member 70 having a downwardly projecting leg 71. This leg has its inside surface comprised of an upper portion 72 positioned generally vertically and lower surface portion 73 also positioned generally vertically but spaced laterally of the surface portion 73 to leave a shoulder 74 therebetween. This leg 70 is contoured and positioned so as to cause the portions 72, 73 and 74 of the inner wall to function as follows:

The stamping apparatus is shown at its starting position at the top of its cycle in Figures 1 and 8. In this position the bottom 75 of the leg 71 is clear of and above the trigger tooth 63. When the tool carrying member 15 is first moved downward an initial distance, the bottom 75 of the leg 71 will have reached a point where it contacts with the top surface 64 of the tooth 63 which it overlaps; a continuation of its downward movement beyond that point of initial engagement will swing the trigger arm 56 clockwise about its pivot support 47 until the position of Figure 9 is reached where the apex 66 of the tooth 63 is about to clear the bottom 75 of the arm 71. Upon a continued downward movement from this point the apex 66 of the tooth 63 will snap past the inner edge of the bottom 75 and engage the inner surface portion 73 of the leg 71. This action will be understood by comparing the full line and dotted line position of the trigger as shown in Figure 6 and the position of engagement of the tooth apex with the surface portion 73 as shown in Figure 10. This engagement will be maintained during the continued downward movement of the leg 71 until the apex 66 of tooth 63 clears the upper end of the surface portion 73 and the shoulder 74 at which time the trigger will resume its normal position as shown in Figure 11 and it can do this because the surface portion 72 is sufficiently depressed relatively to the surface portion 73 to provide the necessary clearance. It will be observed that the position of Figure 11 is reached when the tools 17 are adjacent the work and immediately prior to that moment when they perform their stamping operation. Figure 12 shows that moment when the tools 17 perform the stamping operation, with the trigger and its associated parts continued in their normal position of Figure 11.

Upon the return stroke, parts 15, 17, 70 and 71 move upwardly first from the position of Figure 12 without any change in the position of the trigger finger 63 until the apex 66 of tooth 63 engages the shoulder 74 which causes it to swing counterclockwise which it is free to do without effecting the position of the presser bar 48 because of the character of the surfaces 58 and 59 and their spatial relation to the pivot 47, until the top surface of the trigger arm engages the top of the U-shaped portion 42' which is the position shown in dotted lines in Figure 6. This position will be maintained until the apex 66 of the tooth 63 has cleared the surface 73 which moving upwardly at which moment the tooth 63 will gravitate clockwise to its full line position shown in Figure 6.

From this description it will be observed that the normal position of the parts just described is that shown in Figure 1; that in this normal position the spring pressure is applied to the plunger 45 and through the plunger to the points 67 and

that this pressure is sufficient to cause these points to pin prick the strip so that the combination of all of these conditions provides an engagement which will lock the strip firmly against movement for the stamping operation; that this locking engagement effected by the spring pressure supplemented by engagement of the points of the pins 67 in the pin pricks S^5 formed thereby, is effective at all times except during that limited portion of the downward movement of the tools from its position shown in Figure 9 to its position shown in Figure 11 during which limited portion of the downward movement the spring pressure is released by the clockwise angling of trigger 63 by surface portion 73; and that during this limited period of spring release, the points 67 engage in the pin pricks S^5 only under the gravity pressure or weight of the plunger 45.

It is during this limited period of release of spring pressure that the strip is given a feeding movement to bring a new length thereof into position for a stamping operation, in the manner shortly to be explained. Before doing so I wish to point out that the weight of plunger 45 of itself imposes only a slight holding action upon the strip sufficient to prevent accidental or free movement but not sufficient to interfere with its being fed along.

I will now describe an arrangement in accordance with my invention for bringing a new length thereof into cooperative relation to the particular apparatus with which it is associated or to which it forms an attachment. This attachment shown in Figure 3 removed from the apparatus comprises a head block 80 which may be of any desired shape or size and from which projects downwardly a fixed finger contoured and dimensioned as and for the purposes now to be set forth. This finger is defined at its lower end by side surfaces 82′ and 82^2 and by a bottom surface 82 which is inclined relative to the end wall or surface 82′ so that the finger terminates at its lower end in the edge 83.

The block 80 is slotted at 84 in the plane of the finger 81 and a second finger 85 is received in this slot and is mounted at its upper end about the transverse pivot pin 86 to swing in the plane of the finger 81. This swing is permitted by the fact that the finger 81 is dimensioned smaller than the head block 80 and positioned to one side thereof as will be seen from Figure 3. The finger 85 has its lower portion defined on one side by end surface portions 86, 87 separated by ridge line 86′, and on the other side by surface portions 88, 89 and 90. As viewed in Figure 1 the lower portion defined by these end surface portions can be stated to be narrower than the upper end of this finger incident to the narrowing shoulder 91 to leave a projecting end 92. It will be sufficient for the moment to point out that the surface portion 86 is inclined to the surface portion 88 so that the finger 85 terminates at its lower end in the edge 90. A spring 95 secured at one end to the finger 81 in any preferred or desired manner and at the other end to finger 85 normally tends to swing the finger counterclockwise about its pivot 86 in the showing of Figure 3. This wing is limited by the engagement of portion 92 of the finger 85 with the end wall 82^2 of the finger 81 as clearly shown in Figure 1 which shows the normal position of the parts.

Before proceeding to describe the manner in which the device of Figure 3 functions as part of and in connection with the stamping apparatus and in the performance of the stamping operation I will make these further observations: The spring 95 is relatively weak and has just enough pull to swing the finger 85 to its aforementioned engagement with the finger 81 and therefore requires only a slight force in the opposite direction to spread these fingers apart; the pointed end of the finger 85 extends a substantial distance below the pointed end of the finger 83 and therefore the inclined surface or face 82 of the finger 81 starts at a higher level than does inclined face 82 which extends substantially above the ridge line 86′ which defines the top end of inclined surface 86.

This attachment of Figure 3 is secured to the apparatus here illustrated for exemplification in any preferred or desired manner. It is illustrated as secured as follows: The head block 80 is received in the slot 100 formed in the member 16 and is fixedly secured therein in any preferred or desired manner as by the headed screw 102. The slot 100 and the head block are so dimensioned that the lower end operating portions of the finger project below the bottom of the member 16.

Reference has already been made to the cycle of movement of the tools in the performance of its operation in connection with the disclosure of a mechanism for holding the strip against movement. I will describe the functioning of the strip feeding mechanism by reference to this cycle.

Figures 1 and 8 show the stamping tools at the top of the cycle with the fingers 81 and 85 elevated above the strip. During the aforementioned first increment of downward movement of the tool carrier to its position of Figure 9 it will be observed that the lowermost end of the finger 85 will have entered that opening S^4 which is in vertical registration therebelow to engage its inclined surface 86 with the advanced wall of that opening and a continued downward movement of finger 85 will cause this inclined face to cause the strip to the left in the drawings. Figure 9 shows a position where this camming action is partially performed and Figure 10 shows the position of the parts where the camming feed has been completed. A projection of this inclined face 86 on a horizontal plane will approximate the extent of such movement.

The initial engagement of the inclined face of finger 85 will occur at that point in the cycle of movement of the parts when the trigger finger 63 has already been engaged by the bottom 75 of the leg 71 and swung clockwise to release and the trigger finger will be held in spring releasing position until inclined surface 86 has passed below strip S to complete its camming action. This is clearly shown in Figure 10.

It is obvious that this camming action by the finger 85 will have been completed when the ridge 86′ is in the plane of the strip. Figure 10 shows the finger moved slightly below this position. The finger 81 also moves downwardly with the finger 85 but does not reach the plane of the strip until just about the time that the aforementioned ridge line 86′ has reached that plane and at this point it must be understood that the strip will have been moved to the left in Figure 10 so that an adjacent opening S^4 will now be in vertical registration below the pointed end 83 of the finger 81 so that its inclined face 82 will now engage the advanced wall of that second opening and on the continued downward movement of the parts from the position of Figure 10 to the position of Figure 11, the inclined surface 82 will give

the strip a further increment of movement to the left to complete a cycle of feed of the strip. These two increments of movement are effected while the pressure of the springs **54** continues being maintained in released or non-pressure applying condition. It has been pointed out that the incline **82** is at a lesser angle to the vertical than the incline **86**. This effects a better final feeding adjustment to the strip.

It will further be observed that as the strip S is given its second increment of movement by the inclined face **82**, this lateral displacement of the strip causes the finger **85** to be relatively laterally displaced in its opening S^4 until the point is reached shown in Figure 11 where the action of the spring **95** holds the rear face of the finger **85** in engagement with the rear wall of the opening. This is the position of the parts when the stamping operation is being performed as shown in Figure 12. Upon the retrograde or upward movement of the tool and the fingers **81** and **85**, finger **81** merely moves upwardly out of the opening but the finger **85** is cammed to the left against the pressure of the spring **95** because of the character of the surfaces **90**, **89** and **88**. This camming or spreading action of the finger **85** to the left is shown in Figure 13 and continues until the point **90** of that finger has cleared the strip at which moment the spring **95** will immediately throw finger **85** counterclockwise about its pivot to its original starting position shown in Figure 8, the parts being so dimensioned and contrived that in this position the lower end **90** of the finger **85** will now be in vertical registration with the aforementioned adjacent opening S^4 with which the finger **81** has cooperated for the performance during the next cycle.

It will here be pointed out that at the moment when the tools are actually engaging the strip to perform their stamping operation the strip is engaged and locked in position not only by the points **67** at the right but also by the engagement effected between the two fingers **81** and **85**.

Having thus described my invention and illustrated its use, what I claim as new and desire to secure by Letters Patent, is

1. A device for engaging a strip of material to hold it against movement on its base or support, said device comprising a member, a pointed projection carried by and depending beyond the lower end of said member, means for supporting said member for free downward movement to engage said pointed end with a strip therebeneath normally operative means for applying a sufficiently relatively large pressure to said member to cause said point to prick pinch said strip and to remain engaged in said prick pinch to lock said strip against any movement and means for releasing said large pressure so that the strip can be given a movement merely by a force sufficient to overcome the holding effect of the weight of said member.

2. A device for engaging a strip of material to hold it against movement on its base or support, said device comprising a member, normally operative to engage a strip therebeneath with a relatively small pressure to hold it in position, a presser bar pivoted at one end and means for causing the other end to engage said member and apply thereto a relatively large pressure and means for releasing said relatively large pressure comprising a trigger engageable with the presser bar to disengage it from said member.

3. A device for engaging a strip of material to hold it against movement on a base or support, said device comprising a member, a supporting casing mounted thereon to gravitate freely into engagement with a strip held therebelow, a pointed projection depending from said member and means for pressing said member downwardly with sufficient force to cause the point of said projection to prick pinch the strip to thereby effect a locking engagement.

4. A device for engaging a strip of material to hold it against movement on its base or support, said device comprising a presser bar mounted about a pivot to gravitate normally in one direction and a trigger arm mounted about said pivot to gravitate normally in the other direction so as to cause its lower surface to engage with the upper surface of said presser bar whereby pressure upon said trigger arm to move it in the direction in which it normally gravitates will cause the pressure arm to swing in the same direction.

5. In combination with an apparatus for performing successive stamping operations upon successive increments of length of a strip of material and comprising means for moving a stamping tool from a starting position into engagement with the strip for a stamping operation and then back to its starting position to complete a cycle of operation, normally operative means for prick punching the strip and thereby locking the strip against movement, means for rendering said normally operative means inoperative to lock the strip, during that portion of said cycle of tool movement when it is out of proximity to the strip.

6. A mechanism for giving a perforated strip an increment of movement along its bed, said mechanism comprising a finger provided with a camming surface, means for moving said finger into a perforation of said strip to cause the camming surface to engage with an edge of said opening, and to give said strip an increment in its own plane as the camming surface is moved transversely of said plane.

7. A mechanism for giving a perforated strip an increment of movement along its bed, said mechanism comprising a support, a finger projecting from said support and provided with a camming surface, a second finger projecting from said support and also provided with a camming surface, means for moving said support to engage said first mentioned finger in a perforation and to give the strip a camming feed in the plane thereof, and then engaging said second finger in a perforation and giving the strip a second camming feed to complete a feed of the strip.

8. A mechanism for giving a perforated strip an increment of movement along its bed, said mechanism comprising a support, a finger projecting from said support and provided with a camming surface, a second finger projecting from said support and also provided with a camming surface, means for moving said support to engage said first mentioned finger in a perforation and giving the strip a camming feed in the plane thereof, and then engaging said second finger in a perforation and giving the strip a second camming feed to complete a feed of the strip, one of said fingers being pivoted.

9. A mechanism for giving a perforated strip an increment of movement along its bed, said mechanism comprising a support, a finger projecting from said support and provided with a camming surface, a second finger projecting from said support and also provided with a camming surface, means for moving said support to engage

said first mentioned finger in a perforation and giving the strip a camming feed in the plane thereof, and then engaging said second finger in a perforation and giving the strip a second camming feed to complete a feed of the strip, and the other finger being fixed to the head.

10. A mechanism for giving a perforated strip an increment of movement along its bed, said mechanism comprising a support, a finger projecting from said support and provided with a camming surface, a second finger projecting from said support and also provided with a camming surface, means for moving said support to engage said first mentioned finger in a perforation and giving the strip a camming feed in the plane thereof, and then engaging said second finger in a perforation and giving the strip a second camming feed to complete a feed of the strip, one of said fingers being pivoted and the other finger being fixed to the head, and a spring to normally move said pivoted finger into adjacency to said fixed finger.

11. A mechanism for giving a perforated strip an increment of movement along its bed, said mechanism comprising a support, a finger projecting from said support and provided with a camming surface, a second finger projecting from said support and also provided with a camming surface, means for moving said support to engage said first mentioned finger in a perforation and giving the strip a camming feed in the plane thereof, and then engaging said second finger in a second perforation and giving the strip a second camming feed to complete a cycle of feed.

12. An apparatus for performing successive stamping operations upon successive increments of length of a strip of material comprising means for giving a stamping die a working stroke to bring it into stamping engagement with the strip for a stamping operation and thereafter a return stroke to move it out of such engagement and back to its starting position to complete a cycle of movement for a single stamping operation and means operative only during that portion of said cycle of movement where the die is substantially clear of the strip to give the strip an increment of movement to bring a new portion of the strip into position for the next stamping operation, said last mentioned means comprising a camming finger mounted upon and moving with the die.

13. An apparatus for performing successive stamping operations upon successive increments of length of a strip of material comprising means for giving a stamping die a working stroke to bring it into stamping engagement with the strip for a stamping operation and thereafter a return stroke to move it out of such engagement and back to its starting position to complete a cycle of movement for a single stamping operation and means operative only during that portion of said cycle of movement where the die is substantially clear of the strip to give the strip an increment of movement to bring a new portion of the strip into position for the next stamping operation, said last mentioned means comprising a camming surface fixedly mounted on and moving with the die and a second camming finger swingingly carried by the die.

14. An apparatus for performing successive stamping operations upon successive increments of length of a strip of material comprising means for giving a stamping die a working stroke to bring it into stamping engagement with the strip for a stamping operation and thereafter a return stroke to move it out of such engagement and back to its starting position to complete a cycle of movement for a single stamping operation and means operative only during that portion of said cycle of movement where the die is substantially clear of the strip to give the strip an increment of movement to bring a new portion of the strip into position for the next stamping operation, said last mentioned means comprising a camming surface fixedly mounted on and moving with the die and a second camming finger swingingly carried by the die, the fingers being so devised and arranged that they engage the strip in succession to give it two successive increments of movement to complete a cycle of feed with each stamping cycle.

15. In combination with a stamping apparatus for performing successive stamping out operations upon a strip of material to leave a succession of openings in the strip along its length comprising means for giving a stamping tool a working stroke for a stamping out operation and thereafter a return stroke to complete a cycle of movement for a single stamping operation, of an attachment thereto for feeding the strip to bring a new length thereof into position for a stamping out operation, said attachment comprising a finger movable with the tool to engage through an opening formed in the strip by the stamping operation during one cycle of stamping operation to move the strip to present a new section thereof in position for a stamping operation during the next cycle.

16. In combination with a stamping apparatus for performing successive stamping out operations upon a strip of material to leave a succession of openings in the strip along its length and comprising means for giving a stamping tool a working stroke for a stamping out operation and thereafter a return stroke to complete a cycle of movement for a single stamping operation, of an attachment thereto for feeding the strip to bring a new length thereof into position for a stamping out operation, said attachment comprising a plurality of fingers movable with the tool to engage in succession through an opening left by a previous stamping operation, to give successive increments of movement to the strip to complete a cycle of feed to present a new section of the strip in position for the next stamping operation.

17. In combination with a stamping apparatus for performing successive stamping out operations upon a strip of material to leave a succession of openings in the strip along its length and comprising means for giving a stamping tool a working stroke for a stamping out operation and thereafter a return stroke to complete a cycle of movement for a single stamping operation, of an attachment thereto for feeding the strip to bring a new length thereof into position for a stamping out operation, said attachment comprising a pivoted finger to engage through an opening left by a previous stamping operation to give the strip an increment of movement and a fixed finger engageable through an opening left by a later previous stamping operation to give the strip a second increment of movement both increments of movement being given during a single cycle of operation of the stamping apparatus to complete the feed of the strip for the next stamping operation.

18. In combination with a stamping apparatus for performing successive stamping out operations upon a strip of material to leave a suc-

cession of openings in the strip along its length and comprising means for giving a stamping tool a working stroke for a stamping out operation and thereafter a return stroke to complete a cycle of movement for a single stamping operation, of an attachment thereto for feeding the strip to bring a new length thereof into position for a stamping out operation, said attachment comprising a finger to engage through an opening left by a previous stamping operation to give the strip an increment of movement and a second finger engageable through an opening left by a later previous stamping operation to give the strip a second increment of movement both increments of movement being given during a single cycle of operation of the stamping apparatus to complete the feed of the strip for the next stamping operation.

19. In combination with a stamping apparatus for performing successive stamping out operations upon a strip of material to leave a succession of openings in the strip along its length and comprising means for giving a stamping tool a working stroke for a stamping out operation and thereafter a return stroke to complete a cycle of movement for a single stamping operation, of an attachment thereto for feeding the strip to bring new length thereof into position for a stamping out operation, said attachment comprising a pivoted finger to engage through an opening left by a previous stamping operation to give the strip an increment of movement and a fixed finger engageable through an opening left by a later previous stamping operation to give the strip a second increment of movement, both increments of movement being given during a single cycle of operation of the stamping apparatus to complete the feed of the strip for the next stamping operation, and means for yieldingly holding the pivoted finger engaged with the fixed finger.

20. An apparatus for performing successive stamping operations upon successive increments of length of a strip of material comprising means for giving a stamping die a working stroke to bring it into stamping engagement with the strip for a stamping operation and thereafter a return stroke to move it out of such engagement and back to its starting position to complete a cycle of movement for a single stamping operation and means operative only during that portion of said cycle of movement where the die is substantially clear of the strip to give the strip an increment of movement to bring a new portion of the strip into position for the next stamping operation, said last mentioned means comprising a camming surface fixedly mounted on and moving with the die and a second camming finger swingingly carried by the die, and so positioned relatively to the die as to engage the opening cut through the strip by the preceding stamping operation on the initial part of the working stroke of the tool to feed the strip for an increment of its length.

21. An attachment to be associated in fixed relation to a stamping machine or the like to engage a strip of material in position on the machine base and to hold it against movement during the stamping operation, said attachment adapted to be fixedly associated to the base and comprising a member for continuously engaging the strip with a relatively small pressure which is sufficient only to hold the strip in position against accidental movement, normally active means for applying directly to said member a larger additional pressure which is sufficient to cause the engagement of the member with the strip to lock the strip against any movement and means for rendering said normally active means inactive to release said larger pressure so that the strip can be given a feeding movement merely by a force sufficient to overcome the aforementioned relatively small pressure of the continuous engagement of the strip by said member.

22. An attachment to a stamping machine or the like for engaging a strip of material to hold it against movement on its base or support, said attachment comprising a member, means for supporting said member for free downward movement into continuous engagement with a strip therebeneath to hold it in position against accidental movement, spring means for applying additionally a sufficiently relatively larger pressure to cause said member to engage the strip with a sufficiently larger force to lock the strip against any movement for and during a stamping operation or the like, and means for releasing the spring pressure so that the strip can be given a feeding movement merely by a force sufficient to overcome the holding effect of the weight of said member.

23. An attachment to be associated in fixed relation to a stamping machine or the like to engage a strip of material in position on the machine base to hold the strip against movement during the stamping operation, said attachment comprising a member for normally engaging a strip therebeneath with a relatively small pressure to hold it in position against accidental movement, means for applying additionally a relatively larger pressure directly to said member which is sufficient to cause the member to lock said strip against any movement for and during a stamping operation or the like, said last mentioned means comprising a presser arm mounted to be moved into and out of engagement with said member, and normally active means for effecting such engagement and applying the relatively large pressure.

24. In combination with an apparatus for performing a stamping operation upon a strip of material and comprising means for moving a stamping die in its working stroke from a starting position into engagement with the strip for a stamping operation and back to its stamping position to complete a cycle of movement, of means normally operative to lock the strip against movement, and means operative only during the last increment of said working stroke and only for a period that ends immediately prior to the engagement of the strip by the stamping operation, to release the strip to permit a feeding movement thereof.

25. In combination with an apparatus for performing a stamping operation upon a strip of material and comprising means for moving a stamping die in its working stroke from a starting position into engagement with the strip for a stamping operation and back to its stamping position to complete a cycle of movement, of means normally operative to lock the strip against movement, and means operative only during the last increment of said working stroke and only for a period that ends immediately prior to the engagement of the strip by the stamping operation, to release the strip to permit a feeding movement thereof, and means operative during said period of release to give the strip a feeding movement to bring a new length into position for stamping.

26. In combination with an apparatus for per-

forming a stamping operation upon a strip of material and comprising means for moving a stamping die in its working stroke from a starting position into engagement with the strip for a stamping operation and back to its starting position to complete a cycle of movement, of an attachment thereto comprising means which engage and lock the strip against movement during the entire cycle of movement of the die except for a period during its working stroke which begins after that stroke has started and which ends before the working stroke is completed by engagement of the die with the strip.

27. In combination with an apparatus for performing a stamping operation upon a strip of material and comprising means for moving a stamping die in its working stroke from a starting position into engagement with the strip for a stamping operation and back to its starting position to complete a cycle of movement, of an attachment thereto which comprises means which engage and lock the strip against movement and means for rendering said first means inoperative to lock the strip against a feeding movement, said second mentioned means being rendered active to render the first means inoperative as aforementioned by the movement of the die however only during that period of its working stroke which begins after that stroke has started and which ends before the working stroke is completed by engagement of the die with the strip.

WILLIAM FEILER.