United States Patent [19]

Hutchins

[11] **3,842,357**

[45] **Oct. 15, 1974**

[54] CALIBRATION OF ELECTRICAL BLOOD-PRESSURE MONITORING EQUIPMENT

[76] Inventor: **Thomas B. Hutchins IV**, 310 N.W. Brynwood Ln., Portland, Oreg. 97229

[22] Filed: **Apr. 16, 1973**

[21] Appl. No.: **351,621**

[52] **U.S. Cl.** **328/188**, 328/127, 331/77, 307/268, 324/74, 128/2.06

[51] **Int. Cl.** **H03k 4/02**

[58] **Field of Search** 328/127, 188; 307/268; 331/77, 113; 128/2.06; 324/74

[56] **References Cited**

UNITED STATES PATENTS

3,252,098	5/1966	Schlaepfer	307/268
3,316,491	4/1967	Berman et al.	307/268
3,360,744	12/1967	Blitz et al.	331/113 X
3,395,363	7/1968	McGrath et al.	331/113 X
3,431,912	3/1969	Keller	331/113 X
3,444,394	5/1969	Colvson	328/127 X
3,469,115	9/1969	Partridge	307/268

Primary Examiner—John S. Heyman
Attorney, Agent, or Firm—Kolisch, Hartwell, Dickinson & Stuart

[57] **ABSTRACT**

Producing calibrating voltage wave forms for electrical blood-pressure monitoring equipment. Such production includes (1) the generation of a nonrectangular monopolar voltage wave form having a leading edge with twice the slope of the trailing edge, and a constant amplitude portion between such edges, and (2) from this pulse the forming of a bipolar wave form which is the first derivative of the monopolar wave form. The monopolar wave form is specially configured to approximate closely the voltage wave form generated by a conventional blood-pressure monitoring catheter as such follows normal human arterial blood pressure.

5 Claims, 4 Drawing Figures

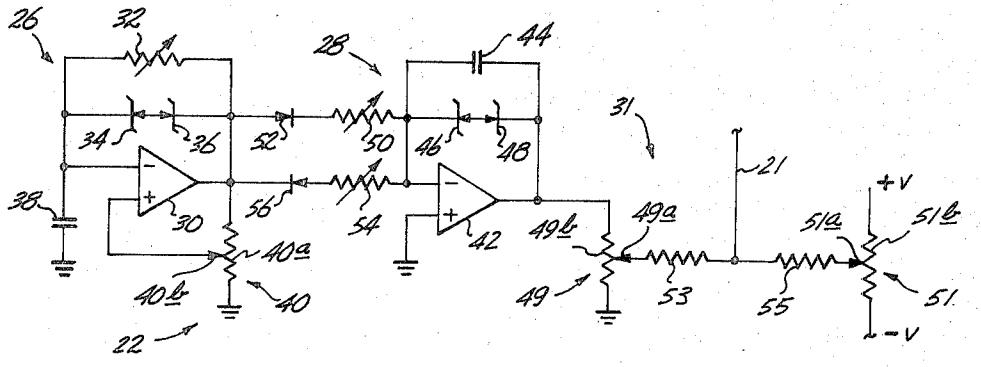

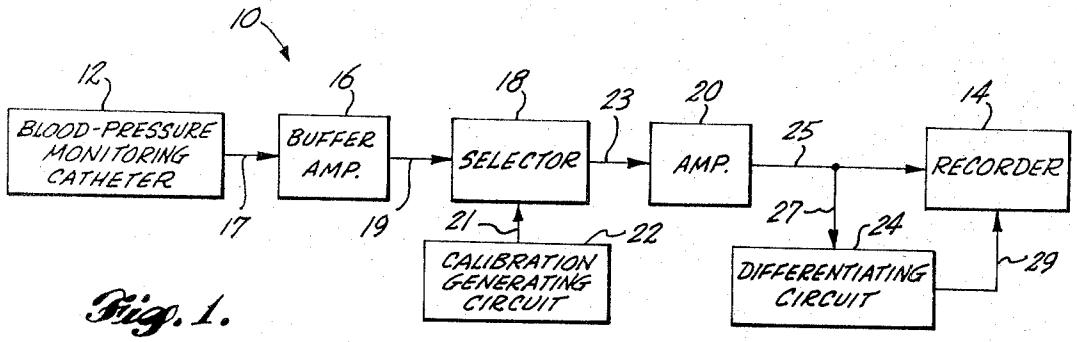

Fig. 1.

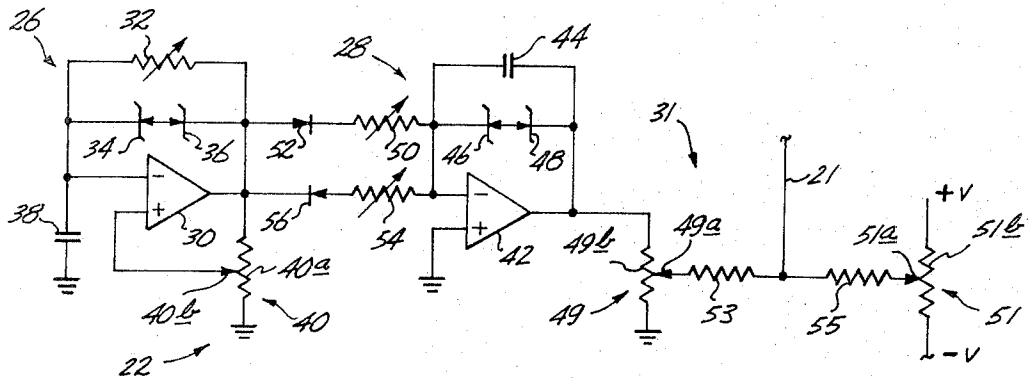

Fig. 2.

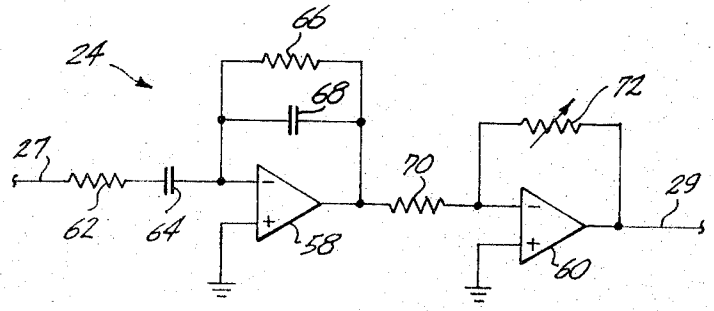

Fig. 3.

Fig. 4.

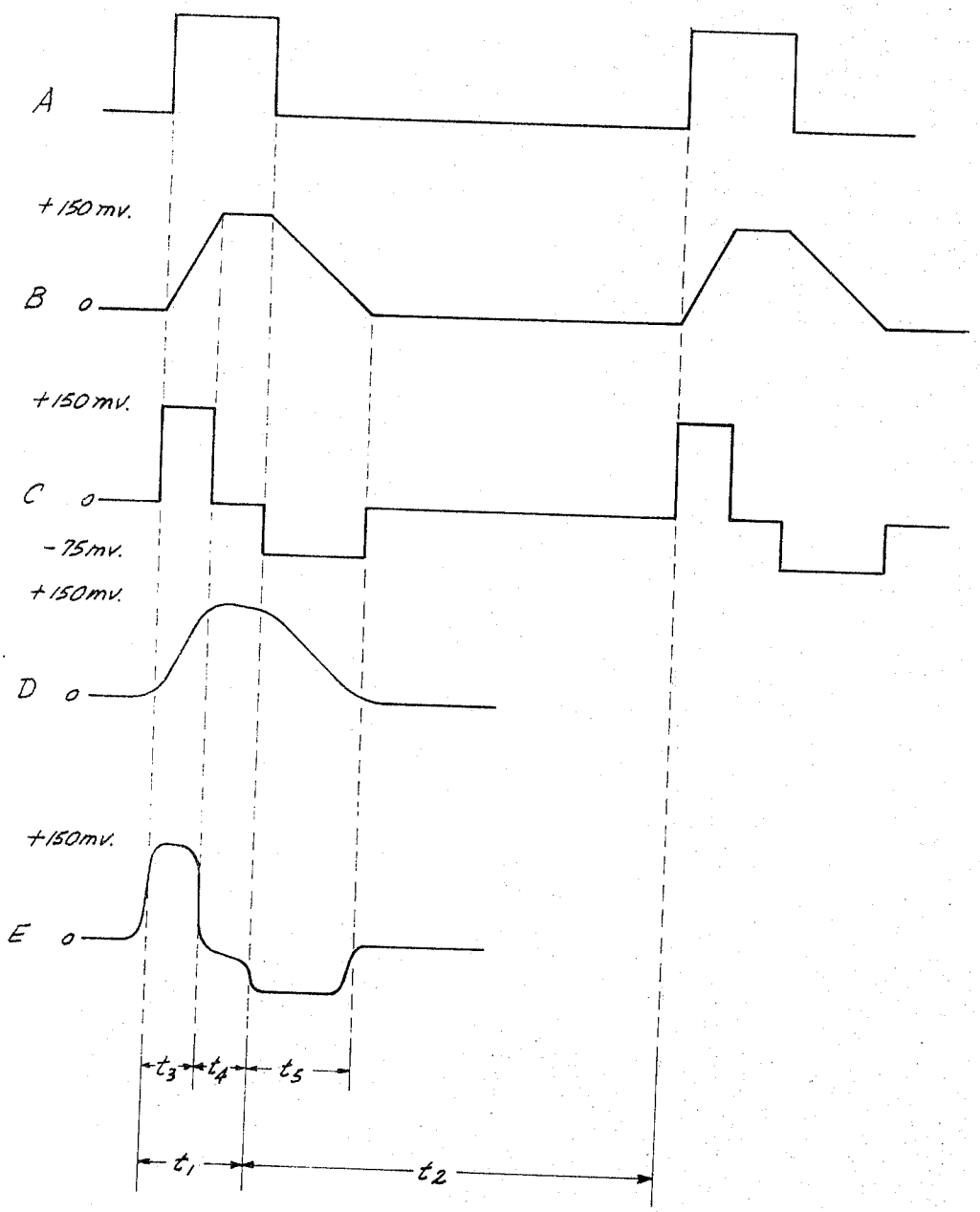

CALIBRATION OF ELECTRICAL BLOOD-PRESSURE MONITORING EQUIPMENT

BACKGROUND AND SUMMARY OF THE INVENTION

This invention pertains to the following of arterial blood pressure in a human being, and more particularly, to a method and apparatus for accurately calibrating an electrical instrument, such as a recorder or an oscilloscope, for monitoring such pressure.

In many medical procedures it is important, or at least desirable, to be able accurately to monitor changes in arterial blood pressure in a patient. In this connection, one usually wishes to observe not only the instantaneous changes (in time) of the actual pressure, but also the first derivative of these changes whereby even minor variations in the systolic and diastolic actions of the heart can readily be detected.

Usually, the actual sensing of such blood pressure is done by means of arterial catheterization, using a catheter equipped to generate an electrical signal which reflects blood pressure changes. For example, a catheter capable of performing extremely accurately in this respect is disclosed in U.S. Pat. No. 3,710,781. Such a catheter may be connected to a buffer amplifier which serves both to isolate the patient from electrical shock, and to amplify signals from the catheter to a usable level. Such an amplifier, for instance, is disclosed fully in my prior-filed copending application, Ser. No. 269,747, filed July 7, 1972, for "Electromedical Patient Monitoring System".

However, satisfactory means has not heretofore been available for accurately calibrating the monitoring device (recorder, oscilloscope, etc.) so that information derived from such a catheter and amplifier is knowingly accurately presented and/or recorded by the device.

A general object of the present invention, therefore, is to provide a novel method and apparatus for assuring the accurate calibration of such monitoring device.

A related object is to provide such a method and apparatus which is relatively simple to practice and use, and which is extremely reliable.

According to the invention, what is contemplated is the generation of a pair of carefully controlled voltage wave forms one of which, in configuration, closely approximates the electrical wave form usually obtained from a catheter following normal arterial blood pressure, and the other of which is an accurate first derivative of the first-mentioned wave form. The novel means used to accomplish such action includes a generating circuit which is operable to generate a monopolar first electrical voltage wave form having a leading edge with a positive slope similar to the slope found in the leading edge of a normal arterial blood pressure wave form, and a trailing edge with a negative slope similar to the negative slope of the trailing edge of the usual blood pressure wave form, and with these edges separated in time by a substantially common amplitude portion. Working in conjunction with this generating circuit is a differentiating circuit which, on receiving a wave form supplied by the generating circuit, produces a bipolar second voltage wave form having separated positive and negative pulses whose amplitudes are directly proportional to the slopes of the leading and trailing edges, respectively, of the wave form generated by the generating circuit. Means is provided in the generating circuit for adjusting, and accurately controlling, the respective slopes of the mentioned leading and trailing edges.

The various other objects and advantages attained by the invention will become more fully apparent as the description which follows is read in conjunction with the accompanying drawings.

DESCRIPTION OF THE DRAWINGS

FIG. **1** is a simplified block diagram illustrating a blood-pressure monitoring system employing apparatus constructed according to the invention.

FIG. **2** is a circuit diagram of a generating circuit as contemplated.

FIG. **3** is a circuit diagram of a differentiating circuit employed in the invention.

And, FIG. **4** is a graph illustrating, on a common time scale, a number of voltage wave forms which are significant in the operation of the system of FIG. **1.**

DETAILED DESCRIPTION OF THE INVENTION

Turning now to the drawings, and referring first to FIG. **1,** here is shown generally at **10,** in block form, a blood-pressure monitoring system employing apparatus constructed in accordance with the present invention. At its input end, so-to-speak, system **10** includes a blood-pressure monitoring catheter **12,** and at its output end, a dual-input, dual-track, ink-stylus recorder **14.** Both of these devices are conventional in construction, and thus are neither illustrated, nor described, in detail herein. Catheter **12** herein is one constructed in accordance with previously referred to U.S. Pat. No. 3,710,781.

Interconnecting these two devices are a buffer amplifier **16,** a selector **18,** an amplifier **20,** a calibration generating circuit **22,** and a differentiating circuit **24.** Amplifier **16** herein comprises a circuit such as that disclosed in the above-mentioned patent application. Selector **18** may simply be a switch through the actuation of which it is possible to feed amplifier **20** with signals coming either from amplifier **16** or from circuit **22.** Amplifier **20** is unity-gain, low output impedance amplifier of any suitable design.

Signals from catheter **12** are supplied the buffer amplifier through a conductor **17,** and are fed from this amplifier to selector **18** via a conductor **19.** Circuit **22** supplies signals to the selector over a conductor **21**—the selector feeding amplifier **20** through a conductor **23.** The output of amplifier **20** couples to one of the inputs in recorder **14** through a conductor **25,** and couples to the input of circuit **24** via conductor **25** and a conductor **27.** Finally, the output of circuit **24** connects with the other input in the recorder through a conductor **29.**

With catheter **12** and buffer amplifier **16** constructed as above indicated, and when the catheter is inserted for use in an artery, blood pressure change, in either direction, of 1 mm. Hg produces a voltage change of 1 mv. at the output of the buffer amplifier. An increase of pressure causes a rise in voltage, and vice versa. While the apparatus of the invention is adapted herein to work in conjunction with such a catheter and such a buffer amplifier, it should be understood, and it is believed it will become apparent, that the apparatus can easily be adapted for calibrating in conjunction with other types of catheters and/or buffer amplifiers, or like input devices.

Circuits **22, 24** are specially constructed in accordance with the invention. Details of circuit **22** are shown in FIG. **2.** This circuit includes an oscillator **26,** a current integrator **28,** and an attenuating and level-setting circuit **31.** The oscillator, also referred to as a first subcircuit, contains a conventional integrated-circuit operational amplifier **30,** connected with other components in the circuit to perform as an oscillator with a frequency of about 2 Hz., and a duty cycle of about 20%. More specifically, connected between the output and the inverting input of this amplifier is the parallel combination of an adjustable resistor **32** and a pair of Zener diodes **34, 36** poled as indicated. Connecting the inverting input to ground is a capacitor **38.** Further, the output of amplifier **30** is connected to ground through the resistance element **40***a* of a potentiometer **40.** The wiper **40***b* of this potentiometer is connected to the noninverting input of amplifier **30.**

In oscillator **26,** its frequency of oscillation is determined by the relative values of the resistance of resistor **32** and the capacitance of capacitor **38.** Through adjusting the resistance value of resistor **32,** fine adjustments in the frequency of the oscillator are possible. Duty cycle is controlled by the position of wiper **40***b* on resistance element **40***a*. Diodes **34, 36** perform a clipping function—preventing undesirable saturation in amplifier **30.**

When operating, oscillator **26** generates a rectangular voltage wave form such as wave form A in FIG. **4.** Preferably, the oscillator is adjusted so that this wave form has a frequency of about 2 Hz., and a duty cycle of about 20%, with each positive pulse having a time width (t_1) of about 100 milliseconds, and with adjacent pulses separated by about 400 milliseconds (t_2). Wave form A may have an overall amplitude of about 20 volts, although this is not at all critical.

Integrator **28,** also referred to as a second subcircuit, includes an operational amplifier **42** which is substantially the same in construction as amplifier **30.** Connected as a feedback path between the output and inverting input of amplifier **42** is the parallel combination of a capacitor **44** and a pair of Zener diodes **46, 48** poled like diodes **34, 36.** The noninverting input of the amplifier is grounded. The wave form produced by oscillator **26** is fed to the integrator through a dual-branch, parallel feeder circuit—one branch of which includes an adjustable resistor **50** and a diode **52,** and the other branch of which includes a similar adjustable resistor **54** and a diode **56.** As can be seen, diodes **52, 56** are poled in reverse directions, with diode **52** arranged to conduct away from the oscillator, the diode **56** disposed to conduct toward the oscillator.

In the integrator, diodes **46, 48** perform the same function as do diodes **34, 36** in the oscillator. Capacitor **44** works with resistors **50, 54** to perform current integration.

Circuit **31** includes a pair of potentiometers **49, 51** whose wipers **49***a*, **51***a* are connected together through series resistors **53, 55.** One end of the resistance element **49***b* in potentiometer **49** is connected to the output of amplifier **42,** and the other end is grounded. With respect to the resistance element **51***b* in potentiometer **51,** its upper end is connected to the positive terminal of a suitable floating DC voltage supply, and its lower end is connected to the negative terminal of the supply. The junction between resistors **53, 55** connects with conductor **21.**

The integrator receives wave form A, and, together with circuit **31,** produces a nonrectangular, monopolar wave form, such as that shown at B in FIG. **4.** It should be understood that the integrator alone generates a wave form identical in configuration with wave form B, but with a considerably larger overall amplitude. For example, the actual wave form produced at the output of amplifier **42** might typically have an overall amplitude of about 14 volts, whereas wave form B preferably has an overall amplitude of about 150 millivolts. Wiper **49***a* is adjusted to control the final overall amplitude of wave form B, and wiper **51***a* is adjusted to assure that the lowest voltage portions of this wave form are at ground potential.

As can be seen, each pulse in wave form B has a positively sloped leading edge, a negatively sloped trailing edge, and a substantially constant voltage portion between these edges. The value of the positive slope of the leading edge is determined by the relative values of the capacitance of capacitor **44** and the resistance of resistor **50**—the latter being adjustable to change the value of this slope. Similarly, the value of the negative slope of the trailing edge is determined by the capacitance of capacitor **44** and the resistance of resistor **54.** Resistor **54** may be adjusted to change the value of the slope.

Preferably, and as is in fact the case with wave form B, the leading edge slope value is twice that of the trailing edge slope—the former being about +3,000 millivolts/sec, and the latter being about −1,500 millivolts/second. The leading edge extends over about 50 milliseconds (t_3), and the trailing edge extends over about 100 milliseconds (t_5)—these two slopes being separated by the constant amplitude portion which lasts about 50 milliseconds (t_4). Such a shape is preferred, since it closely approximates the actual shape of a typical voltage wave form generated by devices such as a catheter **12** and buffer amplifier **16** when following normal arterial blood pressure. Such a wave form is illustrated at D in FIG. **4.**

Adjustability of resistors **50, 54** is a very advantageous feature of the integrator, since it permits accurate controlling of the slopes mentioned.

FIG. **3** shows details of differentiating circuit **24.** This circuit includes a pair of operational amplifiers **58, 60** which are essentially the same in construction as amplifiers **30, 42.** The noninverting inputs of both amplifiers are grounded. The inverting input of amplifier **58** is connected to previously mentioned conductor **27** through a resistor **62** in series with a capacitor **64.** Forming a feedback path between the output and the inverting input of amplifier **58** is the parallel combination of a resistor **66** and a capacitor **68.** The output of amplifier **58** is coupled to the inverting input of amplifier **60** through a resistor **70.** An adjustable resistor **72** is connected as a feedback path between the output and the inverting input of amplifier **60.** Amplifier **58,** along with resistors **62, 66** and capacitors **64, 68,** performs signal differentiation with respect to any signal supplied it via conductor **27.** Amplifier **60,** along with resistors **70, 72,** performs as a low output impedance unity-gain amplifier.

When selector **18** is set to pass signals from circuit **22,** wave form B is supplied over conductor **27** to the differentiating circuit. From this signal, the differentiating circuit produces bipolar wave form C in FIG. **4** which it feeds to recorder **14.** As will be noted, for each

pulse in wave form B, wave form C contains a pair of pulses, the first one in time being positive, and the second one in time being negative, The first, positive pulse lasts throughout the duration of the leading edge of a pulse in wave form B. Its amplitude is essentially constant, and directly reflects the value of the slope of the leading edge. Similarly, the second, negative pulse lasts throughout the duration of the trailing edge of the B wave form pulse, having an amplitude directly reflecting the value of the slope of the trailing edge.

With the leading edge having the slope value indicated, the amplitude of the positive pulse in wave form C directly indicates this value—i.e., +3,000 millivolts/-sec. While the "absolute" amplitude of the positive pulse is a matter of choice, resistor **72** herein is set to make this amplitude about +150 millivolts. With such a setting, it will be apparent that each millivolt above or below zero volts generated by the differentiating circuit represents 20 millivolts/sec. slope value in wave form B. And, since wave form B has been shaped like wave form D, and with about the same overall amplitude, each millivolt from the differentiating circuit can be directly interpreted as a change rate of 20 mm. Hg/sec. of blood pressure.

The amplitude of the negative pulse in wave form C, of course, has the same relationship to the slope of the trailing edge of a pulse in wave form B.

When selector **18** is set to pass signals from buffer amplifier **16,** and assuming that catheter **12** senses normal bloodpressure changes, differentiating circuit **24** feeds wave form E in FIG. **4** to recorder **14.** It will be noted that above-described wave form C closely approximates wave form E.

Explaining now the operation of system **10,** under circumstances of monitoring the arterial blood pressure of a patient, two wave forms derived from catheter **12** are provided the two inputs of recorder **14.** One of these wave forms— that supplied via conductor **25,** is a voltage whose amplitude follows the actual instantaneous changes in arterial pressure, with a change in pressure of 1 mm. Hg. producing an actual voltage change of 1 millivolt in this wave form. The other wave form, supplied the recorder via conductor **27,** comprises the differentiated form of what is supplied through conductor **25,** with a rate of blood-pressure change of 20 mm. Hg/sec. producing a 1 millivolt change in such wave form. Conductors **25, 29** are referred to collectively herein as an output means.

It is naturally desirable that this information be accurately recorded by the recorder in easily readable and interpretable form. Circuits **22, 24** cooperate to calibrate the recorder to assure such performance.

More specifically, to calibrate recorder **14,** selector **18** is set to pass signals from circuit **22** to amplifier **20.** With circuit **22** adjusted as previously described to produce closely controlled wave form B, this wave form passes through amplifier **20** (a unity-gain amplifier), and over conductor **25,** to the recorder, whereupon it is recorded. Since it is known what the actual amplitude and shape of wave form B is, it is a relatively simple matter for the operator to adjust the usual sensitivity control associated with the input connected to conductor **25,** whereby to adjust the recorder to draw a wave form having an actual amplitude in the drawing which can easily be directly read in terms of actual blood pressure. In other words, since it is known that the actual amplitude of wave form B is 150 millivolts, and since it is known that this is related to the expected performances of catheter **12** and amplifier **16** whereby each millivolt represents 1 mm. Hg. of blood pressure, it should be a simple matter to adjust the actual amplitude of the wave drawn by the recorder so that it can easily be read off (on the usual graph-like recorder paper) in terms of actual blood pressure.

Wave form B is also supplied to differentiating circuit **24.** The latter performs differentiation and supplies the first derivative of wave form B to the other input in the recorder. The sensitivity control associated with this input is then also adjusted to produce a recorded drawing which can easily be read to indicate the rate of blood-pressure changes.

With respect to the recording of wave form B, any appreciable nonlinearity in the operation of the recorder's circuitry associated with the input receiving this wave form will be immediately apparent. The same is also true with respect to the recording of wave form C. Here, the fact that there is a time separation between the positive and negative pulses, resulting from the presence of the constant amplitude portion in each pulse of wave form B, greatly assists in determining the accuracy and linearity of performance of the recorder. The actual time separation used is not critical, so long as it is long enough to be easily viewable in a recording of wave form C. A time separation of as little as 1 millisecond, for example, has been found to be usable. 50 milliseconds as used herein is very satisfactory, for it clearly enables one to observe whether the monitoring device accurately settles to a zero voltage level, as it should.

When these calibrating steps are complete, selector **18** may be set to pass signals from catheter **12** and amplifier **16.** Such information is then fed directly over conductor **25** to the recorder, and in differentiated form over conductor **29,** to the recorder. And, after the calibration described, a person using system **10** can accurately read off blood pressure information directly from the recordings in the recorder. Obviously, the calibration of the recorder can be checked at any time simply by resetting selector **18** to couple signals coming from circuit **22.**

Thus, there is provided relatively simple and reliable circuitry for producing a pair of carefully controlled signals which can be used, as described, accurately to calibrate a blood pressure monitoring instrument, such as recorder **14.** By producing a wave form B which closely approximates wave form D, and similarly, by producing differentiated wave form C which is very much like differentiated wave form E, calibration is possible under circumstances subjecting a monitoring instrument to wave forms essentially like that to be expected from normal arterial blood-pressure changes. The adjustability provided in resistors **50, 54** in integrator **28** enables very close control over the slopes of the leading and trailing edges mentioned in wave form B. This, of course, is important in making wave forms B, C similar to wave forms D, E, respectively. The fact that the overall amplitudes of the wave forms produced by circuits **26, 28** are controlled by clipping actions in the Zener diodes results in extremely good amplitude stability with ambient temperature changes.

While a preferred embodiment of the invention has been described, it is appreciated that variations and modifications may be made without departing from the spirit of the invention.

It is claimed and desired to secure by Letters Patent:

1. Apparatus for producing electrical voltage wave forms usable especially for calibrating an electrical instrument for monitoring human arterial blood pressure, said apparatus comprising

generating circuit means operable to generate a monopolar first electrical voltage wave form having a leading edge with a predetermined positive slope of one value, and a trailing edge with a predetermined negative slope of another value which is one-half said one value, said leading and trailing edges being separated in time by a substantially constant amplitude portion,

differentiating circuit means operatively connected to said generating circuit means to receive such a first wave form, operable, on receiving the same, to differentiate it and produce a bipolar second electrical voltage wave form having a first-in-time rectangular pulse with one polarity, and one amplitude which is directly proportional to the value of the slope of said leading edge of said first wave form, and a second-in-time rectangular pulse with the opposite polarity, and another amplitude which is directly proportional to the value of the slope of said trailing edge of said first wave form, said two pulses being separated by a constant zero-voltage portion of said second wave form, which portion corresponds in time to said constant amplitude portion of said first wave form, and

output means for coupling said first and second wave forms to such a monitoring instrument whereby proper operation of said instrument is verified by said constant zero-voltage portion of said second wave form.

2. The apparatus of claim 1, wherein said generating circuit means includes a first subcircuit operable to produce a rectangular voltage pulse, and a second subcircuit operatively connected to said first subcircuit, operable to receive such a pulse, and to produce therefrom, for supplying to said differentiating circuit means, a nonrectangular voltage pulse with such having said leading and trailing edges and said constant amplitude portion.

3. The apparatus of claim 2, wherein said second subcircuit includes means for independently adjusting the values of the slopes of said leading and trailing edges.

4. A method of calibrating an electrical instrument which is for monitoring human arterial blood pressure comprising

generating a monopolar first electrical voltage wave form having a leading edge with a predetermined positive slope of one value, and a trailing edge with a predetermined negative slope of another value which is one-half said one value, and with said leading and trailing edges being separated in time by a substantially constant amplitude portion,

differentiating said first wave form to produce a bipolar second wave form having a first-in-time rectangular pulse with one polarity, and one amplitude which is directly proportional to the value of the slope of said leading edge of said first wave form, and a second-in-time rectangular pulse with the opposite polarity, and another amplitude which is directly proportional to the value of the slope of said trailing edge of said first wave form, said two pulses being separated by a constant zero-voltage portion of said second wave form, which portion corresponds in time to said constant amplitude portion of said first wave form, and

coupling said first and second wave forms into said instrument whereby proper operation of said instrument is verified by said constant zerovoltage portion of said second wave form.

5. The method of claim 4, wherein said generating is accomplished by first producing a rectangular voltage pulse, and then from such pulse producing a nonrectangular voltage pulse having said leading and trailing edges and said constant amplitude portion.

* * * * *