(19) **Octrooicentrum Nederland**

(11) **2028776**

(12) B1 **OCTROOI**

(21) Aanvraagnummer: **2028776**

(22) Aanvraag ingediend: **19 juli 2021**

(51) Int. Cl.:
E04F 15/02 (2021.01) **E04F 15/10** (2022.01)

(30) Voorrang:
-

(41) Aanvraag ingeschreven:
25 januari 2023

(43) Aanvraag gepubliceerd:
-

(47) Octrooi verleend:
25 januari 2023

(45) Octrooischrift uitgegeven:
25 januari 2023

(73) Octrooihouder(s):
I4F LICENSING NV te Hamont-Achel, België, BE

(72) Uitvinder(s):
Eddy Alberic Boucké te Menen (BE)
Pieter Renaat Karel Devos te Koolskamp (BE)

(74) Gemachtigde:
ir. H.Th. van den Heuvel c.s.
te 's-Hertogenbosch

(54) **Multi-purpose tile system, tile covering, and tile**

(57) he invention relates to a multi-purpose tile system, in particular a floor tile system, comprising a plurality of multi-purpose tiles, in particular floor tiles, wall tiles, or ceiling tiles. The invention also relates to a tile covering, in particular floor covering, ceiling covering, or wall covering, consisting of mutually coupled tiles according to the invention. The invention further relates to a tile for use in multi-purpose tile system according to the invention.

NL B1 2028776

Dit octrooi is verleend ongeacht het bijgevoegde resultaat van het onderzoek naar de stand van de techniek en schriftelijke opinie. Het octrooischrift komt overeen met de oorspronkelijk ingediende stukken.

Multi-purpose tile system, tile covering, and tile

The invention relates to a multi-purpose tile system, in particular a floor tile system, comprising a plurality of multi-purpose tiles, in particular floor tiles, wall tiles, or ceiling tiles. The invention also relates to a tile covering, in particular floor covering, ceiling covering, or wall covering, consisting of mutually coupled tiles according to the invention. The invention further relates to a tile for use in multi-purpose tile system according to the invention. The invention moreover relates to an installation method for installing the system according to the invention to create a tile covering.

The last decade has seen enormous advance in the market for laminate for hard floor covering. It is known to install floor panels on a underlying floor in various ways. It is, for example, known that the floor panels are attached at the underlying floor, either by gluing or by nailing them on. This technique has a disadvantage that is rather complicated and that subsequent changes can only be made by breaking out the floor panels. According to an alternative installation method, the floor panels are installed loosely onto the subflooring, whereby the floor panels mutually match into each other by means of a tongue and groove coupling, whereby mostly they are glued together in the tongue and groove, too. The floor obtained in this manner, also called a floating parquet flooring, has as an advantage that it is easy to install and that the complete floor surface can move which often is convenient in order to receive possible expansion and shrinkage phenomena. A disadvantage with a floor covering of the above-mentioned type, above all, if the floor panels are installed loosely onto the subflooring, consists in that during the expansion of the floor and its subsequent shrinkage, the floor panels themselves can drift apart, as a result of which undesired gaps can be formed, for example, if the glue connection breaks. In order to remedy this disadvantage, techniques have already been thought of whereby connection elements made of metal are provided between the single floor panels in order to keep them together. Such connection elements, however, are rather expensive to make and, furthermore, their provision or the installation thereof is a time-consuming occupation. Floor panels having complementarily shaped coupling parts at opposing panel edges are also known. These known panels are typically rectangular and have complementarily shaped angling-down coupling parts at opposing long panel edges and complementarily shaped fold-down coupling parts at opposing short panel edges. Installation of these known floor

panels is based upon the so-called fold-down technique, wherein the long edge of a first panel to be installed is firstly coupled to or inserted into the long edge of an already installed second panel in a first row, after which the short edge of the first panel is coupled to the short edge of an already installed third panel in a second row during lowering (folding down) of the first panel, which installation fulfils the targeted requirement of a simple installation. In this manner a floor covering consisting of a plurality of parallel oriented rows of mutually coupled floor panels can be realized.

It is a first object of the invention to provide a multi-purpose tile system, wherein tiles can be mutually coupled in an improved manner.

It is a second object of the invention to provide a multi-purpose tile system, wherein tiles can be mutually coupled and uncoupled in an improved manner.

It is a third object of the invention to provide a multi-purpose tile system, wherein an increased degree of freedom during installation of the tiles can be achieved.

It is a fourth object of the invention to provide a multi-purpose tile system, wherein special installation patterns, such as herringbone patterns, can be realized, in an improved manner.

It is a fifth object of the invention to provide a multi-purpose tile system, wherein the tiles can be produced in a relatively cost efficient manner.

At least one of these objects can be achieved by providing a multi-purpose system according to the preamble, wherein the tiles, and preferably each tile, comprise: at least one first edge having a first coupling profile comprising: a sideward tongue extending in a direction substantially parallel to the upper side of the tile, at least one first downward flank lying at a distance from the sideward tongue, and a first downward recess formed between the sideward tongue and the first downward flank, at least one second edge having a second coupling profile comprising: a downward tongue extending in a direction substantially perpendicular to the upper side of the tile, at least one second downward flank lying at a distance from the downward tongue, a second downward recess formed between the downward tongue and the downward flank, and, preferably, at least one second locking

element, more preferably provided at the second downward flank of the second coupling profile; at least one third edge, and preferably at least two third edges, each third edge having a third coupling profile comprising: a third recess configured for accommodating at least a part of the sideward tongue of the first coupling profile of a further tile and at least a part of the downward tongue of a further tile, said third recess being defined by an upper lip and a lower lip, wherein said lower lip is provided with an upward locking element, and, preferably, at least one third locking element, more preferably provided at a distal side of the lower lip facing away from the third recess and/or a distal side of the upward locking element facing away from the third recess; wherein the proximal side of the upward locking element of the third coupling profile, facing the third recess, is at least partially, preferably entirely, upwardly inclined in a direction away from the upper lip, wherein the proximal side of the upward locking element comprises a third lower contact portion extending in a first direction and a third upper contact portion extending in a second direction, optionally deviating from the first direction, wherein the first coupling profile and the third coupling profile are configured such that two of such tiles can be coupled to each other at the first and third edges by means of a turning movement, wherein, in coupled condition: at least a part of the sideward tongue of the first coupling profile of a tile is inserted into the third recess of the third coupling profile of an adjacent tile, at least a part of the upward locking element of the third coupling profile is inserted into the first downward recess of the first coupling profile, and a proximal side of the sideward tongue, facing the first downward flank, co-acts with the third upper contact portion and/or third lower contact portion of the upward locking element of the third coupling profile, and wherein the second coupling profile and the third coupling profile are configured such that the two of such tiles can be coupled to each other at the second and third edges, preferably by means of a fold-down movement and/or a vertical and/or a substantially horizontal movement, wherein, in coupled condition: at least a part of the downward tongue of the second coupling profile is inserted in the third recess of the third coupling profile of an adjacent tile, at least a part of the upward locking element of the third coupling profile is inserted in the second downward recess of the second coupling profile, at least one second locking element is facing, and preferably co-acting with, at least one third locking element to realise a vertical locking effect, and a proximal side of the downward tongue, facing the second downward flank, of the second coupling

profile co-acts with the third lower contact portion and/or third upper contact portion of the upward locking element of the third coupling profile.

A benefit of the combination of the (optional) presence of a second locking element, preferably provided at the second downward flank and a third locking element, preferably provided at a distal side of the lower lip facing away from the third recess and/or a distal side of the upward locking element facing away from the third recess, on one hand, and at least a part of the proximal side of the upward locking element of the third coupling profile, facing the third recess, being upwardly inclined in a direction away from the upper lip, on the other hand, is that coupling of adjacent panels is rather simple while sufficient mutual (vertical) locking between said panels can be ensured. The absence of locking element at said positions in combination with the so-called open groove structure may result in an unstable locking situation between the male and the female coupling parts of adjacent panels, in particular for coupling between the second coupling profile and the third coupling profile. The presence of described second and third locking elements may additionally prevent that the male coupling part of the second coupling profile might (slightly) displace, and in particular (slightly) tilt, for example towards the open space of the third recess, during use. Hence, friction between adjacent panels in a coupling condition can be prevented.

Typically, each tile of the tile system according to the invention comprises at least one first coupling profile, at least one second coupling profile, and at least one third coupling profile, and preferably a plurality, e.g. two, third coupling profiles. However, it is imaginable that at least a first tile (a first tile type) comprises at least one first coupling profile and at least one third coupling profile, without having a second coupling profile, while a second tile (a second tile type) comprises at least one second coupling profile and at least one third coupling profile, without having a first coupling profile. Alternatively, it is e.g. imaginable that at least a first tile (a first tile type) comprises at least one first coupling profile and at least one second coupling profile, without having a third coupling profile, while a second tile (a second tile type) comprises at least one third coupling profile without having a first coupling profile and/or a second coupling profile. Hence, each tile of the tile system according to the invention may have at least one first coupling profile and/or at least

one second coupling profile and/or at least one third coupling profile. In case a tile of the system according to the invention is not provided with a coupling profile chosen from the group consisting of: the first coupling profile, the second coupling profile, and the third coupling profile; then this lacking coupling profile of said tile will be included in another tile of the system according to the invention.

Hence, according to another aspect to the invention, it relates to a multi-purpose tile system, in particular a floor tile system, comprising a plurality of multi-purpose tiles, in particular floor tiles, wherein at least one first tile (type) comprises at least one first edge having a first coupling profile comprising: a sideward tongue extending in a direction substantially parallel to the upper side of the tile, at least one first downward flank lying at a distance from the sideward tongue, and a first downward recess formed between the sideward tongue and the first downward flank, wherein at least one second tile (type) comprises at least one second edge having a second coupling profile comprising: a downward tongue extending in a direction substantially perpendicular to the upper side of the tile, at least one second downward flank lying at a distance from the downward tongue, a second downward recess formed between the downward tongue and the downward flank, and preferably, at least one second locking element, preferably provided at the second downward flank of the second coupling profile, and wherein at least one third tile (type) comprises at least one third edge having a third coupling profile comprising: a third recess configured for accommodating at least a part of the sideward tongue of the first coupling profile of a further tile, said third recess being defined by an upper lip and a lower lip, wherein said lower lip is provided with an upward locking element, and preferably, at least one third locking element, preferably provided at a distal side of the lower lip facing away from the third recess and/or a distal side of the upward locking element facing away from the third recess, wherein the proximal side of the upward locking element of the third coupling profile, facing the third recess, is at least partially, preferably entirely, upwardly inclined in a direction away from the upper lip, wherein the proximal side of the upward locking element comprises a third lower contact portion extending in a first direction and a third upper contact portion extending in a second direction, optionally deviating from the first direction, and wherein the first coupling profile and the third coupling profile are configured such that two of such tiles can be coupled to each other at the first and third edges, preferably by means of a turning

movement, wherein, in coupled condition: at least a part of the sideward tongue of the first coupling profile of a first tile is inserted into the third recess of the third coupling profile of an third tile, and at least a part of the upward locking element of the third coupling profile is inserted into the first downward recess of the first coupling profile, a proximal side of the sideward tongue, facing the first downward flank, co-acts with the third upper contact portion and/or third lower contact portion of the upward locking element of the third coupling profile, and wherein the second coupling profile and the third coupling profile are configured such that the two of such tiles can be coupled to each other at the second and third edges, preferably by means of a fold-down movement and/or a vertical movement and/or horizontal movement, wherein, in coupled condition: at least a part of the downward tongue of the second coupling profile of a second tile is inserted in the third recess of the third coupling profile of a third tile, and at least a part of the upward locking element of the third coupling profile is inserted in the second downward recess of the second coupling profile, if applied, at least one second locking element is facing, and preferably co-acting with, at least one third locking element to realise a vertical effect. The first tile and/or the second tile and/or the third tile may be formed by the same tile. The first tile may comprise at least one second coupling profile and/or at least one third coupling profile. The second tile may comprise at least one first coupling profile and/or at least one third coupling profile. The third tile may comprise at least one first coupling profile and/or at least one second coupling profile.

The tile system according to the invention has a plurality of significant advantages. A first main advantage is that the third coupling profile (female profile) is configured to co-act with both the first coupling profile (first male profile) and the second coupling profile (second male profile). This provides an enormous increase in how all tiles are mutually oriented in a tile covering to be realized. The classical row by row installation of tiles is still possible, but the compatibility of the third coupling profile with both the first coupling profile and the second coupling profile also allows the installation of various alternative installation patterns, such as for example, but not limited to, a herringbone pattern, while needing and using only a single tile type. In case of oblong (rectangular) tiles, the short edge of a tile can for example be coupled to either a short edge or to a long edge of an adjacent tile. Furthermore, each tile of the tile system can be manufactured in a relatively cost-efficient

manner, since only three different coupling profiles, instead of the usual four different coupling profiles, will have to be realized during the production process, which will lead to at least a cost-saving in the machinery, and in particular the milling tools, which are used during the production process.

A further major benefit of the tile system according to the invention is that the different male coupling profiles (i.e. the first coupling profile and the second coupling profile) are configured to co-act with different third contact portions of the third coupling profile. This facilitates optimization of the coupling profiles either to realize a facilitated coupling between a male coupling profile and a female coupling profile, wherein the coupling profiles can be coupled in a relatively smooth manner while preserving sufficient locking (in horizontal and/or vertical direction) in coupled condition of two tiles, and/or to allow a relatively smooth uncoupling of two coupled tiles, preferably by means of an upward turning movement (angling out movement). The third lower contact portion and the third upper contact portion may be at least partially overlapping portion. However, preferably the third lower contact portion and the third upper contact portion are non-overlapping contact portion which may connect to each other or which may be positioned at a distance from each other. Preferably the first coupling profile is configured to co-act, preferably solely, with the third upper contact portion, which facilitates angling in and angling out of the first coupling profile with respect to the third coupling profile. Preferably the second coupling profile is configured to co-act, preferably solely, with the third lower contact portion, which is in favour of realizing a stable connection between the second coupling profile and the third coupling profile.

Preferably, third lower contact portion connects to the third upper contact portion, wherein the third lower contact portion extends in a first direction, and the third upper contact portion extends in a second direction, deviating from the first direction, wherein, more preferably, both the third upper contact portion and the third lower contact portion are upwardly inclined in a direction away from the upper lip. This results in the situation that that the third upper contact portion and the third lower contact portion have different inclinations (with respect to a plane defined by the tiles). It is imaginable that the third lower contact portion connects via at least one intermediate curved zone, preferably a convex zone, to the third upper contact portion, wherein the third lower contact portion extends in a first direction, and the

third upper contact portion extends in a second direction, deviating from the first direction. An optional curved zone prevents damaging of the coupling profiles during (un)coupling. An optional convex curved zone facilitates the third lower contact portion to be more steep than the third upper contact portion. In other words, a first angle enclosed by the first direction in which the third lower contact portion extends and a plane defined by the tile is preferably larger than a second angle enclosed by the second direction in which the third upper contact portion extends and a plane defined by the tile. A less steep third upper contact portion facilitates e.g. coupling and uncoupling of the first coupling profile and the third coupling profile. A more steep third lower contact portion facilitates e.g. a stable connection between the second coupling profile and third coupling profile with a horizontal locking effect. Preferably, the first direction in which the third lower contact portion extends encloses an angle with a plane define by the tile which is 50° to 85°, preferably between 60° and 75°, more preferably between 63° and 67°, in particular approximately 65°. Preferably, the second direction in which the third upper contact portion extends encloses an angle with a plane define by the tile which is 30° to 65°, preferably between 40° and 55°, more preferably between 47° and 53°, in particular approximately 50°.

Preferably, and as already briefly addressed above, in coupled condition of the first coupling profile and the third coupling profile of adjacent tiles, the proximal side of the sideward tongue, facing the first downward flank, co-acts only with the third upper contact portion of the upward locking element of the third coupling profile. At least a part of the proximal side of the sideward tongue configured to co-act with the third upper contact portion preferably runs substantially parallel to the third upper contact portion. This substantially parallel orientation leads to a line contact in coupled condition of two tiles, as seen from a cross-sectional view of the tiles, which is more stable than a line contact.

Preferably, and as already briefly addressed above, in coupled condition of the second coupling profile and the third coupling profile of adjacent tiles, the proximal side of the downward tongue, facing the second downward flank, co-acts only with the third lower contact portion of the upward locking element of the third coupling

profile. At least a part of the proximal side of the downward tongue configured to co-act with the third lower contact portion preferably runs substantially parallel to the third lower contact portion. This substantially parallel orientation leads to a line contact in coupled condition of two tiles, as seen from a cross-sectional view of the tiles, which is more stable than a line contact.

Preferably, a heel of the downward tongue, defined by a bottom side of the downward tongue and the proximal side of the downward tongue, is provided with a cut-out portion to facilitate uncoupling of second coupling and the third coupling profile. The cut-out portion provides more space to uncouple the second coupling profile with respect to the third coupling profile by means of an angling out movement (turning movement). Preferably, the maximum height of the cut-out portion is at least 0.2 mm. Preferably, the maximum height of the cut-out portion is less than 0.4 mm to secure sufficient contact between the downward tongue and upward locking element in coupled condition,.

Preferably, the first edge and the third edge, in coupled condition, define a first closing surface defined as a first vertical plane through the upper edges of the coupled tiles or at least the location where the tiles come together at the upper side of the tiles. Preferably, the first coupling profile and the third coupling profile are configured such that in coupled condition, each of the sideward tongue and the third recess extends through said first vertical plane (joint plane). This facilitates to realize a vertical locking effect. By “extending through” is meant that a part of the sideward tongue is located at one side of the first vertical plane and another part of the sideward tongue is located at an opposite side of the first vertical plane. The same applies to the third recess. The lower lip which limits the lower side of the third recess typically extends beyond the upper lip. Preferably the upper lip defines said vertical plane (joint plane) of two tiles in coupled condition. Preferably, the upward locking element is positioned at a distance from said vertical plane. Here, the upward locking element and the upper lip are typically positioned at opposing sides of the joint plane. Here, the possible difference between the upper lip and lower lip which border the third recess, measured in the plane of the tile is preferably smaller than one time the total thickness of the tile. This will save material loss during manufacturing of the tile. However, in another preferred embodiment, the difference between the upper lip and the lower lip, measured in

the plane of the tile is larger than 1.0 times, and is preferably at least 1.25 times, the thickness of the tile. In this embodiment, the lower lip is relatively long having as advantage that the third recess and the matching sideward tongue and downward tongue can be dimensioned relatively large (compared to the situation in which a relatively short lower lip is applied), which is beneficial for the robustness, stability and durability of the couplings achieved by means of the coupling profiles of adjacent tiles. The second vertical plane normally coincides with the aforementioned first vertical plane. The second coupling profile and the third coupling profile are preferably configured such that in coupled condition, the downward tongue is positioned at one side of the second vertical plane, and the third recess extends through said second vertical plane. In a preferred embodiment, the distal side of the downward tongue, facing away from the second downward flank, is provided with a fourth locking element, and the upper lip of the third coupling profile is provided with a fifth locking element configured to face, and preferably co-act with, said fourth locking element to achieve a vertical locking effect, in coupled condition of the second coupling profile and the third coupling profile of adjacent tiles, wherein, in coupled condition of the second coupling profile and the third coupling profile of adjacent tiles, the fourth coupling element and the remaining part of the downward tongue are preferably situated at opposite sides of the second vertical plane, and wherein, in coupled condition of the second coupling profile and the third coupling profile of adjacent tiles, the fifth coupling element and the remaining part of the upper lip are preferably situated at opposite sides of the second vertical plane. Preferably, the fourth element comprises a bulge having an upper side which extends in a third direction, wherein said upper side is downwardly inclined in a direction away from the second downward flank, wherein, preferably, a third angle enclosed by said third direction and a plane defined by the tile is between 25° and 35°, preferably between 28° and 32°, in particular approximately 30°. Preferably, the (protruding) fourth locking element has a maximum width with respect to the second vertical plane of 0.06 to 0.16 mm, preferably 0.08 to 0.12 mm. A width below 0.08 mm, in particular below 0.06 mm, typically leads to a poor or even absent vertical locking effect, while a width over 0.12 mm, in particular over 0.16 mm, typically renders uncoupling of the second coupling profile with respect to the third coupling profile, by means of an angling out movement (upward turning movement), rather difficult, and could even make such uncoupling impossible.

Preferable, an upper side of the lower lip defines a support surface for both the downward tongue of the second coupling profile of an adjacent tile, and the sideward tongue of the first coupling profile of an adjacent tile. More preferably, the support surface of the lower lip comprises a second support portion for supporting the downward tongue of the second coupling profile of an adjacent tile, and a first support portion for supporting the sideward tongue of the first coupling profile of an adjacent tile, wherein the second support portion and the first support portion are partially overlapping portion, or, typically more preferably, non-overlapping portions, wherein the second support portion and the first support portion connect to each other or, and this is even more preferred, are positioned at a distance from each other. Preferably, the second support portion is located closer to the upward locking element than the first support portion. At least a part of the first support portion and the second support portion are preferably located at different side of the (first or second) vertical plane, as defined above. Preferably, the support surface of the lower lip is substantially flat, which makes this support surface suitable to act as sliding surface (guiding surface) for the sideward tongue during insertion of the sideward tongue to the third recess. Preferably, the support surface of the lower lip is downwardly inclined in a direction towards the upward locking element. This inclination creates more space for insertion of the sideward tongue, which facilitates the coupling process between the first coupling profile and third coupling profile, and moreover, creates more space for accommodating the downward tongue which can be design in a more voluminous manner, which increases the strength of the downward tongue, and hence the strength of the coupling connection between the second coupling profile and third coupling profile. Preferably, the inclined support surface and a plane defined by the tile mutually enclose an angle of between 1° and 4°, in particular 2° to 3°.

In a cross-sectional view of the third coupling profile (and the first and second coupling profiles), the width of the first support portion is preferably smaller than the width of the second support portion. Preferably, in a cross-sectional view of the third coupling profile, the first support portion defines a point contact (or first line contact) and the second support portion defines a (second) line contact (which is larger than the first line contact).

Preferably, the sideward tongue comprises a tip, facing away from the first downward flank, and a heel, facing towards the first downward flank, wherein a bottom side of the sideward tongue situated in between said tip and said heel is upwardly inclined in a direction towards the first downward flank. This typically creates a substantially triangular space between the first coupling profile and third coupling profile in coupled condition. Said inclination of the bottom side of the sideward tongue is favourable as this creates somewhat more space to angle in and angle out the first coupling profile with respect to the third coupling profile. Preferably, the direction in which the bottom side of the sideward tongue extends and the plane defined by the tile mutually enclose an angle of between 2° and 10°, preferably between 4° and 6°, in particular approximately 5°.
The lowest portion of the bottom side of the sideward tongue normally defines a contact surface configured to co-act with the first support portion of the lower lip of the third coupling profile. In coupled condition of the first coupling profile and the third coupling profile, the tip of the sideward tongue is preferably clamped in between the lower lip and upper lip, more in particular in between the first support portion and the lower side of the upper lip.

Although it is imaginable that the first downward flank is provided with a first locking element configured to co-act with the third locking element of the third coupling profile, it is commonly preferred that the first downward flank is free of any locking element. This creates more space in between the first coupling profile and the third coupling profile, which facilitates both coupling and uncoupling.

Preferably, each tile comprises a first pair of opposing edges consisting of the first edge and the third edge. Each tile preferably comprises a second pair of opposing edges consisting of the second edge and the third edge. By arranging the coupling profiles, which are configured to mutually cooperate, at opposing edges, the installation of the tiles of the tile system can be facilitated. The tiles of the tile system typically have a square, rectangular, triangular, hexagon, octagon, or other polygonal shape. However, other shapes, like a parallelogrammical shape, are also imaginable as will be elucidated further below. Preferably, in case of a tile with an even number of edges, the number of third coupling profiles of said tile corresponds to the sum of the number of first coupling profiles and the number second coupling profiles. Typically, the number of first coupling profiles of a tile corresponds to the

number of second coupling profiles, although deviations are imaginable, wherein a tile may for example comprise more second coupling profiles than first coupling profiles, or vice versa.

At least a number of tiles of the tile system according to the invention may be rigid or may be flexible (resilient), or slightly flexible (semi-rigid). Each tile is typically made as one of the following kinds: as a laminate floor panel; as a so-called "resilient floor panel"; a "LVT" (luxury vinyl tile) panel or "VCT panel" (vinyl composite tile) or comparable panel on the basis of another synthetic material than vinyl; a floor panel with a first synthetic material-based, preferably foamed, substrate layer (core layer), with thereon a preferably thinner second substrate layer (second core layer) of or on the basis of vinyl or another synthetic material; as a floor panel with a hard synthetic material-based substrate.

It is preferred that the tile comprise one-piece coupling profiles, and in particular with one-piece vertically active coupling profiles, such by applying certain structural features and/or material characteristics and/or designs of the coupling profiles. The coupling profiles are preferably an integral part of each tile, and are typically made of one or more material layers which constitute the tile body. Preferably, the first coupling profile and the third coupling profile are configured for locking together tiles both vertically and horizontally. Preferably, the second coupling profile and the third coupling profile are configured for locking together tiles both vertically and horizontally. Since the first coupling profile is configured to be coupled to the third coupling profile by means of a turning movement, also referred to as a rotational movement or angling down movement, and since the second coupling profile is configured to be coupled to the third coupling profile by means of a fold-down movement and/or vertical movement, also referred to as a scissoring movement or zipping movement, the tiles of the tile system according to the invention can still be installed by using the user-friendly fold-down installation technology. The advantages achieved by the couplings thus in general lie in an improved tile with improved coupling profiles, wherein the advantage of a simple manufacture, by making use of easy to manufacture coupling profiles, namely, because they do not necessarily have to make use of separate connection pieces, the advantage that the tiles preferably can be installed according to the user-friendly fold-down

principle, and the advantage of offering a relatively reliable and durable coupling, are combined.

In a preferred embodiment, at least one second locking element of the second coupling profile is provided at the second downward flank of the second coupling profile, and wherein at least one third locking element of the third coupling profile is provided at a distal side of the lower lip facing away from the third recess and/or a distal side of the upward locking element facing away from the third recess. It is commonly favourable to positioning at least one second locking elements and at least one third locking element at the predefined locations, since at these locations there is relatively much space, which allows the design of the locking elements to be more robust, which will be in favour of the vertical locking effect.

In a preferred embodiment, at least one second locking element of the second coupling profile is provided at a distal side of the downward tongue facing away from the second downward recess, and wherein at least one the third locking element of the third coupling profile is provided at a side of the upper lip, in coupled condition facing said distal side of the downward tongue of the second coupling profile of an adjacent tile. This alternative positioning of the locking elements has the advantage that the locking elements are positioned close to the upper seam formed between adjacent tiles, which contributes to the stabilization of said seam, and which counteracts that tiles will vertically shift with respect to each other close to the seam. It is indicated that this alternative positioning of the locking elements may be combined with the positioning of the locking elements described in the previous paragraph, in case a plurality of second locking elements and a plurality of third locking elements are applied. More preferably, the co-action between the second locking element and the third locking element for creating a vertical locking effect in coupled condition of two tiles, defines a tangent T1 which encloses an angle A1 with a plane defined by the tile, which angle A1 is smaller than an angle A2 enclosed by said plane defined by the tile and a tangent T2 defined by a co-action between an inclined part of a proximal side of the upward locking element facing toward the third recess and an inclined part of a proximal side of the downward tongue facing toward the second downward flank. Here, preferably, the greatest difference between angle A1 and angle A2 is situated between 5 and 20 degrees. It is preferable that said second locking element and said third locking

element are positioned closer to the upper side of the tile compared to an upper side of the upward locking element. This will reduce the maximum deformation of one or more coupling profiles, whereas the connection process and deformation process can be executed in successive steps. Less deformation leads to less material stress which is in favour of the life span of the coupling profiles and hence of the tile(s).

The first coupling profile preferably comprises at least one first locking element configured to face, and preferably co-act with, the third locking element of the third coupling profile of an adjacent tile in coupled condition. The presence of this at least one first locking element and the co-action of this first locking element with the third locking element in coupled condition further improves the stability of the coupling between the first coupling profile and the third coupling profile. Preferably, at least one first locking element of the first coupling profile is provided at the first downward flank of the first coupling profile, and wherein at least one third locking element of the third coupling profile is provided at a distal side of the lower lip facing away from the third recess and/or a distal side of the upward locking element facing away from the third recess. It is however also imaginable, optionally in addition to the aforementioned positioning of the first locking element, that at least one first locking element of the first coupling profile is provided at a distal side of the first coupling profile, being located above at least a part of the sideward tongue, and wherein at least one the third locking element of the third coupling profile is provided at a side of the upper lip, in coupled condition facing said distal side of the first coupling profile of an adjacent tile.

In a preferred embodiment, at least a part of the proximal side of the upward locking element of the third coupling profile, facing the third recess, is upwardly inclined in a direction away from the upper lip, preferably in such a way that an angle is enclosed with the normal perpendicular to the plane defined by each tile wherein said angle is situated between 0 and 60 degrees, in particular between 0 and 45 degrees. This inclination results in an open third recess which facilitates insertion both of the sideward tongue and of the downward tongue.

Preferably, at least a part of the proximal side of the downward tongue of the second coupling profile, facing the second downward recess, is downwardly

inclined in a direction away from the second downward flank, preferably in such a way that an angle is enclosed with the normal perpendicular to the plane defined by each tile wherein said angle is situated between 0 and 60 degrees, in particular between 0 and 45 degrees. Preferably, at least a part of the proximal side of the sideward tongue of the first coupling profile, facing the first downward recess, is downwardly inclined in a direction away from the first downward flank, preferably in such a way that an angle is enclosed with the normal perpendicular to the plane defined by each tile wherein said angle is situated between 0 and 60 degrees, in particular between 0 and 45 degrees. By applying a corresponding inclination, a more complementary shape is given to the first coupling profile and/or second coupling profile, which normally results in a more stable coupling between the first and third coupling profiles and between the second and third coupling profiles.

In an alternative embodiment, at least a part of the proximal side of the upward locking element of the third coupling profile, facing the third recess, is upwardly inclined in a direction towards the upper lip, preferably in such a way that an angle is enclosed with the normal perpendicular to the plane defined by each tile wherein said angle is situated between 0 and 60 degrees, in particular between 0 and 45 degrees. This inward inclination leads to a (slightly) closed third recess, wherein the upward locking element may be used to hook around or clamp around the sideward tongue and/or the downward tongue once inserted in said third recess. This is in particularly possible in case at least a part of the proximal side of the downward tongue of the second coupling profile, facing the second downward recess, is downwardly inclined in a direction towards the second downward flank, preferably in such a way that an angle is enclosed with the normal perpendicular to the plane defined by each tile wherein said angle is situated between 0 and 60 degrees, in particular between 0 and 45 degrees. And the aforementioned gripping around effect and/or clamping effect of the upward locking element can for example also be achieved in case at least a part of the proximal side of the sideward tongue of the first coupling profile, facing the first downward recess, is downwardly inclined in a direction towards the first downward flank, preferably in such a way that an angle is enclosed with the normal perpendicular to the plane defined by each tile wherein said angle is situated between 0 and 60 degrees, in particular between 0 and 45 degrees.

Preferably, a first transition zone between the proximal side of the sideward tongue of the first coupling profile and a lower side of the sideward tongue of the first coupling profile is curved. This curved first transition zone may be used to guide the sideward tongue into the third recess during coupling of adjacent tiles. It is also imaginable that a second transition zone between the proximal side of the downward tongue of the second coupling profile and a lower side of the downward tongue of the second coupling profile is curved. This curved second transition zone may be used to guide the downward tongue into the third recess during coupling of adjacent tiles. A third transition zone between the proximal side of the upward locking element of the third coupling profile and an upper side of the upward locking element of the third coupling profile is preferably (also) curved to facilitate insertion of the downward tongue and the sideward tongue into the third recess.

Preferably, at the lower side of the lower lip of the third coupling profile, a recess is present, which extends up to the distal end of the lower lip and which allows a bending of the lower lip in downward direction. Bending of the lower lip in downward direction allows the third recess to widen during coupling, which will facilitate insertion of the sideward tongue and the downward tongue into the third recess. Dependent on the specific design of the coupling profiles, the lower lip may remain in bended state in a coupled condition of adjacent tiles. To this end, the first coupling profile and the third coupling profile may be configured such that in coupled condition the first coupling profile is clamped by the third coupling profile. And to this end, the second coupling profile and the third coupling profile may (also) be configured such that in coupled condition the second coupling profile is clamped by the third coupling profile. The clamping effect will commonly be the result of a deformation, either an elastic bending or an elastic compression (squeezing), or a combination of both. The clamping effect will typically improve the mutually locking and coupling of cooperating coupling profiles.

The pretension is preferably realized by using overlapping contours of matching coupling profiles, in particular overlapping contours of the downward tongue and the third recess and/or overlapping contours of the upward locking element and the first and/or second downward recess. Overlapping contours doesn't mean that the complete contour should overlap, and merely requires that at least of part of the (outer) contour of the first and/or second coupling profile overlaps with at least a

part of the (outer) contour of the third coupling part. The contours are typically compared by considering the contours of the first coupling part and the second coupling part from a side view (or cross-sectional view). By applying overlapping contours, the first and/or second coupling profiles and/or the third coupling profile will typically remain (elastically) deformed, in particular squeezed and/or bent, in a coupled state, provided the desired stability of the coupling. Normally, with overlapping contours the downward tongue will be (slightly) oversized with respect to the third recess, and/or the upward locking element will be (slightly) oversized with respect to the first and/or second downward recess. However, it should be understood that overlapping contours may also be realized in another manner, for example by applying overlapping (first, second, and/or third) locking elements.

In a preferred embodiment, the contour of the first coupling profile part which is configured to enclose the upward locking element of the third coupling profile is substantially identical to the (corresponding) contour of the second coupling profile part which is configured to enclose the upward locking element of the third coupling profile. The contour of a remaining part of the first coupling profile and the contour of a remaining part of the second coupling profile are typically mutually distinctive. The contact surface between the first coupling profile and the third coupling profile, in coupled condition, is preferably larger than the contact surface between the second coupling profile and the third coupling profile, in coupled condition. Preferably, the connection (coupling) between the first coupling profile and the third coupling profile leads to a firmer engagement per unit edge length in the longitudinal direction of the third recess and parallel to the plane of the tile(s) than the connection (coupling) between the second coupling profile and the third coupling profile.

During coupling of the tiles, the upward locking element may be (elastically) deformed, in particular squeezed and/or bent. Bending will take place from its initial position (slightly) in outward direction, away from the upper lip. A bent state of the upward locking element may remain in the coupled state of two tiles. The bending angle of the proximal side of the upward locking element, facing the upward flank, will commonly be restricted and situated in between 0 and 2 degrees.

It is imaginable, and even preferable, that the second coupling profile and the third coupling profile are configured such that in coupled condition a so-called pretension is existing, while the first coupling profile and the third coupling profile are configured such a coupled condition is substantially free of pretension. This (hybrid) embodiment may facilitate coupling of the tiles.

In an alternative embodiment, the first coupling profile and the third coupling profile are configured such that a coupled condition is substantially free of pretension between the first coupling profile and the third coupling profile. The same may apply between the second coupling profile and the third coupling profile, wherein the second coupling profile and the third coupling profile may be configured such that a coupled condition is substantially free of pretension between the second coupling profile and the third coupling profile. This can typically be achieved in case the contour of the first coupling profile and/or the second coupling profile fits into or with the contour of the third coupling profile, preferably without play to counteract the risk of the occurrence of creaking noises.

In a preferred embodiment, the first coupling profile and the third coupling profile are configured such that in coupled condition a plurality of, preferably at least three, distant contact zones are present, wherein in between each pair of adjacent contact zones a space remains. Preferably, the second coupling profile and the third coupling profile are configured such that in coupled condition a plurality of, preferably at least three, distant contact zones are present, wherein in between each pair of adjacent contact zones a space remains. By applying one or more intentional (air) gaps between the coupling profiles in coupled condition. These, the created clearance(s) or gap(s) is/are advantageous for the purpose of absorbing expansion of the tile, for instance resulting from environmental temperature changes, and/or for accumulation of dust, in particular environmental dust or dust created during production of the tile(s).

Typically, (also) the second edge and the third edge, in coupled condition, define a second closing surface defining a second vertical plane through the upper edges of the coupled tiles or at least the location where the tiles come together at the upper

side of the tiles. Preferably, the second coupling profile and the third coupling profile are configured such that in coupled condition, the downward tongue is positioned at one side of the second vertical plane, and the third recess extends through said second vertical plane. This means that the one outer end of the third recess, typically also referred to as the tip of the third recess, remains empty when the second coupling profile and the third coupling profile are mutually coupled.

A distal side of the downward tongue, facing away from the second downward recess, preferably comprises at least a vertical upper wall part adjacent to the upper side of the tile, and, adjacent to and located below said vertical wall part, an angled wall part that angles inward toward a chamfered and/or curved lower wall part of said distal side of the downward tongue. The lower wall part of said distal side is preferably connected to a lower side of the downward tongue. Preferably, in between said angled wall part and said lower wall part an intermediate vertical wall part is situated. This intermediate vertical wall part allows the downward tongue to be design in a more robust manner. This specific shape is commonly the most preferred shape during production, and provides said distal side of the downward tongue both a guiding function (defined by the lower wall part) for guiding the downward tongue into the third recess, and a closing function for creating a closed seam between the upper edges of adjacent panels (defined by the upper wall part). One of the aforementioned wall parts, and preferably the upper wall part of the distal side of the downward tongue may be provided with a second locking element to realize and/or improve a vertical locking between coupled tiles.

In a preferred embodiment, a lower side of the sideward tongue of the first coupling profile, in coupled condition of two tiles, is supported by a lower surface of the upward third recess of the third coupling profile. The lower surface of the third recess is defined by an upper side of the lower lip. This supporting contact preferably causes a fixation in the mutual position of the first coupling profile and the third coupling profile. The second coupling profile and third coupling profile preferably cooperate under tension at this supporting contact zone or supporting contact point. The same is preferably applied with respect to the second coupling profile and the third coupling profile. To this end, a lower side of the downward tongue of the second coupling profile, in coupled condition of two tiles, is supported by a lower surface of the (upward) third recess of the third coupling profile. This

supporting contact preferably causes a fixation in the mutual position of the second coupling profile and the third coupling profile. The coupling second profile and coupling third profile preferable cooperate under tension at this supporting contact zone or supporting contact point. A stable support of the sideward tongue and the downward tongue by the lower lip, in coupled condition, may further stabilize the coupling between the coupling profiles, and may also counteract the risk of the occurrence of creaking noises (squeaking).

In a preferred embodiment, in a coupled condition of tiles, the first downward flank of the first coupling profile and a distal side of the upward locking element and/or lower lip of the third coupling profile, facing the first downward flank, are positioned at a distance from each other. Preferably, in a coupled condition of tiles, the second downward flank of the second coupling profile and a distal side of the upward locking element and/or lower lip of the third coupling profile, facing the second downward flank, are positioned at a distance from each other. This intermediate (vertical) space between adjacent tiles creates some space for the lower lip and the upward locking element to (slightly) deform during coupling, and optionally to remain in a (slightly) deformed state in coupled condition of the tiles. This technical effect typically facilitates coupling and may also improve the stability of the coupling.

At least a part of, and preferably the complete, upper side of the upward locking element is inclined downwardly in a direction facing way from the upper lip of the third coupling profile. Preferably, at least a part of, and preferably the complete, upper side of the first downward recess is inclined downwardly towards the first downward flank. Preferably, both inclinations mutually enclose an angle between (and including) 0 and 5 degrees. The inclination of the upper side of the upward locking element is preferably situated between 15 and 45 degrees, more preferably between 25 and 35 degrees, and is most preferably about 30 degrees, with respect to a horizontal plane (being a plane defined by the tile). The inclination of the upper side of the upward locking element is preferably constant, which means the upper side has a substantially flat orientation. Preferably, an upper side of the first downward recess and/or the second downward recess has a, preferably likewise (compared to the inclination of the upper side of the upward locking element) inclining orientation, which is more preferably upward in the direction of the

sideward tongue and/or in the direction of the downward tongue. A first lower surface of a first bridge connecting the downward tongue to the core (main body) of the tile is defined by the upper side of the first downward recess (or vice). A second lower surface of a second bridge connecting the downward tongue to the core (main body) of the tile is defined by the upper side of the second downward recess (or vice). Applying an inclined upper side of the first downward recess will result in a varying thickness of the first and/or second bridge, as seen from the core in the direction of the downward tongue. This position-dependent bridge thickness, wherein the bridge thickness is preferably relatively large close to the core and relatively small close to the downward tongue, bridge thickness has multiple advantages. The thicker part of the first and/or second bridge, close to the core, provides the bridge more and sufficient strength and robustness, while the thinner part of the bridge, close to the sideward tongue and/or downward tongue, forms the weakest point of the bridge and will therefore be decisive for the location of first deformation (pivoting point) during coupling. Since this point of deformation is located close to the sideward tongue and/or downward tongue the amount of material to be deformed to be able to insert the sideward tongue and/or downward tongue into the third recess can be kept to a minimum. Less deformation leads to less material stress which is in favour of the life span of the coupling profile(s) and hence of the tile(s). In the coupled state of adjacent tiles, the upper side of the first downward recess or second downward recess could be at least partially, and preferably substantially completely, supported by the upper side of the upward locking element, which provides additionally strength to the coupling as such. To this end, it is advantageous that the inclination of the upper side of the first downward recess and/or second downward recess substantially corresponds to the inclination of the upper side of the upward locking element. This means that the inclination of the upper side of the first downward recess and/or second downward recess is preferably situated between 15 and 45 degrees, more preferably between 25 and 35 degrees, and is most preferably about 30 degrees, with respect to a horizontal plane. This inclination may be either flat or rounded, or eventually hooked.

In coupled condition of two tiles, the (inclined or horizontal) upper side of the upward locking element of the third coupling profile is preferably positioned at a distance from the (inclined or horizontal) upper side of the first downward recess of

the first coupling profile due to facilitate coupling and to allow dust to accumulate within the space created directly above the upward locking element.

In a preferred embodiment, an upper side of the upward locking element is positioned at a lower level than the upper lip of the third coupling profile. This allows sufficient space to dimension the first coupling profile and the second coupling profile in a relatively robust manner, which is in favour of the strength of the first coupling profile and the second coupling profile. Moreover, this configuration facilitates insertion of the sideward tongue and the downward tongue into the third recess.

The third locking element preferably comprises at least one outward bulge, and that the second locking element and – if applied – the first locking element comprise(s) at least one first locking groove or second locking groove, respectively, which outward bulge is adapted to be at least partially received in the first locking groove and second locking groove of an adjacent coupled tile for the purpose of realizing a locked coupling, preferably a vertically locked coupling. The third locking element and the second locking element preferably have a substantially complementary shape. Alternatively, the third locking element comprises at least one third locking groove, and the second locking element and – if applied – the first locking element comprises at least one outward bulge (ridge), which outward bulge is adapted to be at least partially received in said locking groove of an adjacent coupled tile for the purpose of realizing a locked coupling. It is also conceivable that the first locking element (if applied), the second locking element and the third locking element are not formed by a bulge-groove combination, but by another combination of co-acting profiled surfaces and/or high-friction contact surfaces. In this latter embodiment, the at least one locking element of the first, second, or third locking element may be formed by a (flat of otherwise shaped) contact surface composed of a, optionally separate, plastic material configured to generate friction with the other locking element of another tile in engaged (coupled) condition. Examples of plastics suitable to generate friction include:

- Acetal (POM), being rigid and strong with good creep resistance. It has a low coefficient of friction, remains stable at high temperatures, and offers good resistance to hot water;

- Nylon (PA), which absorbs more moisture than most polymers, wherein the impact strength and general energy absorbing qualities actually improve as it absorbs moisture. Nylons also have a low coefficient of friction, good electrical properties, and good chemical resistance;
- Polyphthalamide (PPA). This high performance nylon has through improved temperature resistance and lower moisture absorption. It also has good chemical resistance;
- Polyetheretherketone (PEEK), being a high temperature thermoplastic with good chemical and flame resistance combined with high strength. PEEK is a favourite in the aerospace industry;
- Polyphenylene sulphide (PPS), offering a balance of properties including chemical and high-temperature resistance, flame retardance, flowability, dimensional stability, and good electrical properties;
- Polybutylene terephthalate (PBT), which is dimensionally stable and has high heat and chemical resistance with good electrical properties;
- Thermoplastic polyimide (TPI) being inherently flame retardant with good physical, chemical, and wear-resistance properties.
- Polycarbonate (PC), having good impact strength, high heat resistance, and good dimensional stability. PC also has good electrical properties and is stable in water and mineral or organic acids; and
- Polyetherimide (PEI), maintaining strength and rigidity at elevated temperatures. It also has good long-term heat resistance, dimensional stability, inherent flame retardance, and resistance to hydrocarbons, alcohols, and halogenated solvents.

Typically, though not necessarily, the third locking element is positioned at a distal side of the lower lip and/or the upward locking element, and at a distance both from a lower side of the lower lip and an upper side of the upward locking element. This allows the third locking element to co-act with a relatively large surface area, and therefore intensively, with a complementary first locking element and/or second locking element.

Typically, the upward locking element protrudes in vertical direction (i.e. a direction perpendicular to the plane defined by the panel) with respect to the lower lip. Preferably, the effective height of the upward locking element (in said vertical

direction) is defined as the maximum (vertical) distance between a highest location of the upward locking element and a lowest location of the lower lip. Preferably, the effective height of the upward locking element is at least 20%, more preferably at least 25%, and even more preferably at least 30% of the panel thickness. Preferably, the combined thickness of the lower lip and the upward locking element is at least 50% of the panel thickness. These preferred features all aim to improve the horizontal locking effect between two panels in coupled condition.

Each coupling profile is preferably free from hook and loop fasteners and/or adhesive connections. Each tile preferably does not comprise any other coupling profile than at least one first coupling profile, at least one second coupling profile, and at least one, preferably at least two, third coupling profile(s). Preferably, each coupling profile is provided with chamfers, such as bevels, at or near the upper side of the tiles. The presence of the chamfers, such as bevels, typically make seam gaps less visible. The presence of chamfers lead to the situation that when two tiles are brought together for attachment, a valley or V-shaped recess is formed. Preferably, the tapered or bevelled edges are at an angle of from about 15° to about 55°, and more preferably at about a 17° angle. Also, the width of the bevelled or tapered edge is about 1.0 mm to about 7.0 mm.

When realizing a chevron pattern, it is advantageous in case the system comprises two different types of tiles (A and B respectively), and wherein the coupling profiles of one type of tile along are arranged in a mirror-inverted manner relative to the corresponding coupling profiles of the other type of tile. To this end, it is preferred in case the system comprises a plurality of tiles having a parallelogrammical shape, wherein said tiles are configured to being joined in a chevron pattern, wherein two pairs of adjacent edges enclose an acute angle, and wherein two pairs of other adjacent edges enclose a obtuse angle. The acute angle is typically situated between 30 and 60 degrees, and is preferably substantially 45 degrees. The obtuse angle is typically situated between 120 and 150 degrees, and is preferably substantially 135 degrees. Preferably, at least one parallelogrammical tile (A) has a configuration, wherein the edges are arranged, as seen from a top view in a clockwise direction, in the order: a first edge, a third edge, another third edge, and a second edge, and wherein at least one parallelogrammical tile (B) has a configuration, wherein the edges are arranged, as seen from a top view in a

clockwise direction, in the order: a first edge, a second edge, a third edge, and another third edge. Distinctive visual markings, for example coloured labels, symbolic labels, (pre-attached) differently coloured backing layers, and/or text labels, may be applied to different tile types to allow a user to easily recognize the different tiles types during installation. Preferably the visual markings are not visible in a coupled condition of the tiles (from a top view). A visual marking may, for example, be applied onto the upper side of the upward locking element and/or inside the third recess and/or inside the first or second downward recess. It is imaginable that the system according to the invention comprises more than two different types of tiles.

At least one tile, and preferably each tile, preferably comprises a core layer and at least one upper substrate affixed – either directly or indirectly – to an upper side the core layer, wherein said upper substrate preferably comprises a decorative layer. The upper substrate is preferably at least partially made of at least one material selected from the group consisting of: metals, alloys, macromolecular materials such as vinyl monomer copolymers and/or homopolymers; condensation polymers such as polyesters, polyamides, polyimides, epoxy resins, phenol-formaldehyde resins, urea formaldehyde resins; natural macromolecular materials or modified derivatives thereof such as plant fibres, animal fibres, mineral fibres, ceramic fibres and carbon fibres. Here, the vinyl monomer copolymers and/or homo-polymers are preferably selected from the group consisting of polyethylene, polyvinyl chloride (PVC), polystyrene, polymethacrylates, polyacrylates, polyacrylamides, ABS (acrylonitrile-butadiene-styrene) copolymers, polypropylene, ethylene-propylene copolymers, polyvinylidene chloride, polytetrafluoroethylene, polyvinylidene fluoride, hexafluoropropylene, and styrene-maleic anhydride copolymers, and derivates thereof. The upper substrate most preferably comprises polyethylene, polyurethane (PU), or polyvinyl chloride (PVC). The polyethylene can be low density polyethylene, medium density polyethylene, high density polyethylene or ultra-high density polyethylene. The upper substrate layer can also include filler materials and other additives that improve the physical properties and/or chemical properties and/or the processability of the product. These additives include known toughening agents, plasticizing agents, reinforcing agents, anti- mildew (antiseptic) agents, flame-retardant agents, and the like. The upper substrate typically comprises a decorative layer and an at least partially transparent or translucent

wear layer covering said decorative layer, wherein a top surface of said wear layer is the top surface of said tile, such that decorative layer is visible through the transparent wear layer.

Preferably, at least one tile, and preferably each tile, comprises an upper substrate affixed – either directly or indirectly – to an upper side of at least one core layer, wherein said upper substrate preferably comprises a veneer layer. Said veneer layer preferably has a Mohs hardness of greater than 3. Said veneer layer preferably has a thickness of between 2 and 8mm. Said veneer layer being dimensioned so as not to overlie the supporting core layer and/or the at least one or more coupling profiles applied. The veneer layer is preferably composed of a material selected from the group consisting of natural stone, marble, granite, slate, glass, and ceramics. More preferably, the veneer layer is a ceramic of a type selected from the group consisting of Monocuttura ceramic, Monoporosa ceramic, porcelain ceramic, or multi-casted ceramic. Preferably, the veneer layer has a breaking modulus greater than 10 N/mm2, more preferably greater than 30 N/mm2. The thickness of the upper substrate typically varies from about 0.1 to 3.5 mm, preferably from about 0.5 to 3.2 mm, more preferably from about 1 to 3 mm, and most preferably from about 2 to 2.5 mm. The thickness ratio of the core layer to the upper substrate commonly varies from about 1 to 15 : 0.1 to 3.5, preferably from about 1.5 to 10 : 0.5 to 3.2, more preferably from about 1.5 to 8 : 1 to 3, and most preferably from about 2 to 8 : 2 to 2.5, respectively.

Each tile may comprise an adhesive layer to affix the upper substrate, directly or indirectly, onto the core layer. The adhesive layer can be any well-known bonding agent or binder capable of bonding together the upper substrate and the core layer, for example polyurethanes, epoxy resins, polyacrylates, ethylene-vinyl acetate copolymers, ethylene-acrylic acid copolymers, and the like. Preferably, the adhesive layer is a hot-melt bonding agent.

The decorative layer or design layer, which may be part of the upper substrate as mentioned above, can comprise any suitable known plastic material such as a known formulation of PVC resin, stabilizer, plasticizer and other additives that are well known in the art. The design layer can be formed with or printed with printed patterns, such as wood grains, metal or stone design and fibrous patterns or three-

dimensional figures. Thus the design layer can provide the tile with a three dimensional appearance that resembles heavier products such as granite, stone or metal. The thickness of the design layer typically varies from about 0.01 to 0.1 mm, preferably from about 0.015 to 0.08 mm, more preferably from about 0.2 to 0.7 mm, and most preferably from about 0.02 to 0.5 mm. The wear layer that typically forms the upper surface of the tile can comprise any suitable known abrasion-resistant material, such as an abrasion-resistant macromolecular material coated onto the laver beneath it, or a known ceramic bead coating. If the wear layer is furnished in layer form, it can be bonded to the layer beneath it. The wear layer can also comprise an organic polymer layer and/or inorganic material layer, such as an ultraviolet coating or a combination of another organic polymer layer and an ultraviolet coating. For example, an ultraviolet paint capable of improving the surface scratch resistance, glossiness, antimicrobial resistance and other properties of the product. Other organic polymers including polyvinyl chloride resins or other polymers such as vinyl resins, and a suitable amount of plasticizing agent and other processing additives can be included, as needed.

In a preferred embodiment, at least one tile comprises a plurality of strip shaped upper substrates directly or indirectly affixed to an upper side the core layer, wherein said upper substrates are arranged side by side in the same plane, preferably in a parallel configuration. Here, the plurality of upper substrates preferably substantially completely cover the upper surface of the core layer, and more preferably extend from the first edge to the second edge of the tile. Each of the plurality of upper substrates comprises a decorative layer, wherein the decorative layers of at least two adjacently arranged upper substrates preferably have different appearances. The application of a plurality of strip shaped upper substrates, are arranged side by side in the same plane and directly or indirectly affixed to the core layer will create the attractive aesthetical effect that the tile is defined by the strip shaped upper substrates as such, while having the advantages that during installation merely the tiles as such will have to be coupled rather than the strip shaped upper substrates, which would be time-consuming and expensive.

Preferably, the core layer comprises at least one foaming agent. The at least one foaming agent takes care of foaming of the core layer, which will reduce the density of the core layer. This will lead to light weight tiles, which are lighter weight in

comparison with tiles which are dimensionally similar and which have a non-foamed core layer. The preferred foaming agent depends on the (thermo)plastic material used in the core layer, as well as on the desired foam ratio, foam structure, and preferably also the desired (or required) foam temperature to realise the desired foam ratio and/or foam structure. To this end, it may be advantageous to apply a plurality of foaming agents configured to foam the core layer at different temperatures, respectively. This will allow the foamed core layer to be realized in a more gradual, and more controller manner. Examples of two different foaming agents which may be present (simultaneously) in the core layer are azodicarbonamide and sodium bicarbonate. In this respect, it is often also advantageous to apply at least one modifying agent, such as methyl methacrylate (MMA), in order to keep the foam structure relatively consistent throughout the core layer.

Polymer materials suitable for forming the core layer may include polyurethane (PUR), polyamide copolymers, polystyrene (PS), polyvinyl chloride (PVC), polypropylene (PP), polyethylene terephthalate (PET), Polyisocyanurate (PIR), and polyethylene (PE) plastics, all of which have good moulding processability. The at least one polymer included in the core layer may either may be solid or may be foamed (expanded). Preferably, chlorinated PVC (CPVC) and/or chlorinated polyethylene (CPE) and/or another chlorinated thermoplastic material is/are used to further improve the hardness and rigidity of the core layers, and of the tiles as such, reducing the vulnerability of the pointed vertexes of each tile, which makes the tile even more suitable to be used as parallelogrammatic/rhombic tile for realizing chevron patterns. Polyvinyl chloride (PVC) and polyurethane (PU) materials are especially suitable for forming the core layer because they are chemically stable, corrosion resistant, and have excellent flame-retardant properties. The plastic material used as plastic material in the core layer is preferably free of any plasticizer in order to increase the desired rigidity of the core layer, which is, moreover, also favourable from an environmental point of view.

The core layer may also at least partially be composed of a, preferably PVC-free, thermoplastic comprising composition. This thermoplastic composition may comprise a polymer matrix comprising (a) at least one ionomer and/or at least one acid copolymer; and (b) at least one styrenic thermoplastic polymer, and, optionally,

at least one filler. An ionomer is understood as being a copolymer that comprises repeat units of electrically neutral and ionized units. Ionized units of ionomers may be in particular carboxylic acid groups that are partially neutralized with metal cations. Ionic groups, usually present in low amounts (typically less than 15 mol % of constitutional units), cause micro-phase separation of ionic domains from the continuous polymer phase and act as physical crosslinks. The result is an ionically strengthened thermoplastic with enhanced physical properties compared to conventional plastics.

The polymer(s) used in the upper substrate and/or the core layer may be virgin polymers, although it is often preferred that a mixture of virgin polymeric material and (the same) recycled polymeric material is used. Here, it is e.g. imaginable that at least a part of the core layer is composed of a mixture of virgin and recycled PU. Instead of PU, also other polymers may be used in this respect, such as PVC, PP, and/or PET.

The core layer may be made of a composite of at least one polymer and at least one non-polymeric material. The composite of the core layer preferably comprises one or more fillers, wherein at least one filler is selected from the group consisting of: talc, chalk, wood, calcium carbonate, titanium dioxide, calcined clay, porcelain, a(nother) mineral filler, and a(nother) natural filler. The filler may be formed by fibres and/or may be formed by dust-like particles. Here, the expression "dust" is understood as small dust-like particles (powder), like wood dust, cork dust, or non-wood dust, like mineral dust, stone powder, in particular cement. The average particle size of the dust is preferably between 14 and 20 micron, more preferably between 16 and 18 micron. The primary role of this kind of filler is to provide the core layer, and the parallelogrammatic/rhombic tile(s) as such, sufficient hardness. This will allow the tiles, including their – commonly relatively vulnerable – pointed vertexes, to realize chevron patterns in a reliable and durable manner. Moreover, this kind of filler will typically also improve the impact strength of the core layer and of the tile(s) as such. The weight content of this kind of filler in the composite is preferably between 35 and 75%, more preferably between 40 and 48% in case the composite is a foamed composite, and more preferably between 65 and 70% in case the composite is a non-foamed (solid) composite.

In an alternative configuration of the tile system according to the invention, each tile comprises a substantially rigid core layer at least partially made of a non-foamed (solid) composite comprising at least one plastic material and at least one filler. A solid core layer may lead to an improved tile strength, and hence a reduced vulnerability of the pointed vertexes, and may further improve the suitability to use the tiles to realize a chevron pattern. A drawback of applying a solid composite in the core layer instead of a foamed composite in the core layer is that the tile weight will increase (in case core layers of identical thicknesses would be applied), which may lead to higher handling costs, and higher material costs.

Preferably, the composite of the core layer comprises at least one filler of the core layer is selected from the group consisting of: a salt, a stearate salt, calcium stearate, and zinc stearate. Stearates have the function of a stabilizer, and lead to a more beneficial processing temperature, and counteract decomposition of components of the composite during processing and after processing, which therefore provide long-term stability. Instead of or in addition to a stearate, for example calcium zinc may also be used as stabilizer. The weight content of the stabilizer(s) in the composite will preferably be between 1 and 5%, and more preferably between 1.5 and 4%.

The composite of the core layer preferably comprises at least one impact modifier comprising at least one alkyl methacrylate, wherein said alkyl methacrylate is preferably chosen from the group consisting of: methyl methacrylate, ethyl methacrylate, propyl methacrylate, isopropyl methacrylate, t-butyl methacrylate and isobutyl methacrylate. The impact modifier typically improves the product performance, in particular the impact resistance. Moreover, the impact modifier typically toughens the core layer and can therefore also be seen as toughening agent, which further reduces the risk of breakage. Often, the modifier also facilitates the production process, for example, as already addressed above, in order to control the formation of the foam with a relatively consistent (constant) foam structure. The weight content of the impact modifier in the composite will preferably be between 1 and 9%, and more preferably between 3 and 6%. Preferably, the substantially complete core layer is formed by either a foamed composite or a non-foamed (solid) composite. At least one plastic material used in the core layer is preferably free of any plasticizer in order to increase the desired

rigidity of the core layer, which is, moreover, also favourable from an environmental point of view.

The core layer and/or another layer of the tile may comprise wood-based material, for example, MDF, HDF, wood dust, prefabricated wood, more particularly so-called engineered wood. This wood-based material may be part of a composite material of the core layer.

The density of the core layer typically varies from about 0.1 to 1.5 grams/cm3, preferably from about 0.2 to 1.4 grams/cm3, more preferably from about 0.3 to 1.3 grams/cm3, even more preferably from about 0.4 to 1.2 grams/cm3, even more preferably from about 0.5 to 1.2 grams/cm3, and most preferably from about 0.6 to 1.2 grams/cm3.

The polymer used in the core layer and/or the core layer as such preferably has an elastic modulus of more than 700 MPa (at a temperature of 23 degrees Celsius and a relative humidity of 50%). This will commonly provide sufficient rigidity to the core layer, and hence to the parallelogrammatic/rhombic tile as such.
The core layer preferably layer has a thickness of at least 3 mm, preferably at least 4 mm, and still more preferably at least 5 mm. It is imaginable that each tile comprises a plurality of core layers. Different core layers may have either identical compositions or different compositions.

The density of the core layer preferably varies along the height of the core layer. This may positively influence the acoustic (sound-dampening) properties of the tiles as such. Preferably, at a top section and/or a bottom section of a foamed core layer a crust layer may be formed. This at least one crust layer may form integral part of the core layer. More preferably, both the top section and the bottom section of the core layer form a crust layer enclosing the foam structure. The crust layer is a relatively closed (reduced porosity, preferably free of bubbles (cells)) layer, and hence forms a relatively rigid (sub)layer, compared to the more porous foam structure. Commonly, though not necessary, the crust layer is formed by sealing (searing) the bottom and top surface of the core layer. Preferably the thickness of each crust layer is between 0.01 and 1 mm, preferably between 0.1 and 0.8 mm. A too thick crust will lead to a higher average density of the core layer which

increases both the costs and the rigidity of the core layer. The thickness of the core layer (core layer) as such is preferably between 2 and 10 mm, more preferably between 3 and 8 mm, and is typically approximately 4 or 5 mm. Preferably, a top section and/or a bottom section of the (composite) core layer forms a crust layer having a porosity which is less than the porosity of the closed cell foam plastic material of the core layer, wherein the thickness of each crust layer is preferably between 0.01 and 1 mm, preferably between 0.1 and 0.8 mm.

Preferably, each tile comprises at least one backing layer affixed to a bottom side of the core layer, wherein said at least one backing layer at least partially made of a flexible material, preferably an elastomer. The thickness of the backing layer typically varies from about 0.1 to 2.5 mm. Non-limiting examples of materials whereof the backing layer can be made of are polyethylene, cork, polyurethane and ethylene-vinyl acetate. The thickness of a polyethylene backing layer is for example typically 2 mm or smaller. The backing layer commonly provides additional robustness and impact resistances to each tile as such, which increases the durability of the tiles. Moreover, the (flexible) backing layer may increase the acoustic (sound-dampening) properties of the tiles. In a particular embodiment, the core layer is composed of a plurality of separate core layer segments affixed to said at least one backing layer, preferably such that said core layer segments are mutually hingeable. The lightweight features of the tiles are advantageous for obtaining a secure bond when installing the tile on vertical wall surfaces. It is also especially easy to install the tile at vertical corners, such as at inside corners of intersecting walls, pieces of furniture, and at outside corners, such as at entry ways. An inside or outside corner installation is accomplished by forming a groove in the core layer of the tile to facilitate bending or folding of the tile.

Each tile may comprises at least one reinforcing layer. At least one reinforcing layer may be situated in between the core layer and the upper substrate. At least one reinforcing layer may be situated in between two core layers. The application of a reinforcing layer may lead to further improvement of the rigidity of the tiles as such. This may also lead to improvement of the acoustic (sound-dampening) properties of the tiles. The reinforcement layer may comprise a woven or non-woven fibre material, for example a glass fibre material. They may have a thickness of 0.2 – 0.4 mm. It is also conceivable that each tile comprises a plurality of the (commonly

thinner) core layer stacked on top of each other, wherein at least one reinforcing layer is situated in between two adjacent core layers. Preferably, the density of the reinforcing layer is preferably situated between 1,000 and 2,000 kg/m3, preferably between 1,400 and 1,900 kg/m3, and more preferably between 1,400 and 1,700 kg/m3.

Preferably, at least a part of the first coupling profile and/or at least a part of second coupling profile and/or at least a part of the third coupling profile of each tile is integrally connected to the core layer. In this case one-piece tiles are formed, which are relatively easy and cost-efficient to produce.

The first coupling profile and/or the second coupling profile and/or the third coupling profile preferably allows deformation during coupling and uncoupling of tiles. At least a number of tiles is identical. It is also imaginable that at least a number of tiles have different sizes and/or different shapes. Apart from the already discussed parallelogrammical shaped tiles for realizing chevron patterns, it is also imaginable that the tile system comprises different types of tiles (A and B respectively), wherein the size of a first type of tile (A) differs from the size of second type of tile (B). These A and B panels may e.g. have a rectangular and/or square shape. Distinctive visual markings may be applied to different tile types, preferably for installation purposes. To this end, distinctive visual markings are preferably applied to an upper side of third recess and/or an upper side of the upward locking element of the third coupling profile of each tile type.

The invention also relates to a tile covering, in particular floor covering, wall covering, ceiling covering and/or furniture covering, consisting of mutually coupled tiles according to the invention. The invention also relates to a tile for use in multi-purpose tile system according to the invention.

The invention will be elucidated on the basis of non-limitative exemplary embodiments shown in the following figures, wherein:

- figure 1a shows a schematic representation of a multi-purpose tile for use in a multi-purpose tile system according to the invention;
- figure 1b shows a schematic representation of a multi-purpose tile system comprising a plurality of multi-purpose tiles as shown in figure 1a;

- figure 2a shows a schematic representation of two different types of multi-purpose tiles for use in another embodiment of a multi-purpose tile system according to the invention;
- figure 2b shows a schematic representation of a multi-purpose tile system comprising a plurality of multi-purpose tiles as shown in figure 2a;
- figure 3a shows a schematic representation of a multi-purpose tile for use in yet another embodiment of a multi-purpose tile system according to the invention;
- figure 3b shows a schematic representation of a multi-purpose tile system comprising a plurality of multi-purpose tiles as shown in figure 3a;
- figure 4a shows a cross-section along line A-A of a multi-purpose tile as shown in figures 1a, 2a or 3a;
- figure 4b shows a cross-section along line B-B of a multi-purpose tile as shown in figures 1a, 2a or 3a; and
- figures 5a-5c show a cross-section of two multi-purpose tiles as shown in figures 1a, 2a or 3a in a first, second and third coupled condition respectively.

Figure 1a shows a schematic representation of a multi-purpose tile (100) for use in a multi-purpose tile system (110) according to the invention. The figure shows a tile (100) comprising a first pair of opposing edges consisting of a first edge (101) and an opposite third edge (103) and a second pair of opposing edges consisting of a second edge (102) and an opposing third edge (103). The first, second and third edges (101, 102, 103) are respectively provided with first, second and third coupling profiles (104, 105, 106). The first coupling profile (104) and the third coupling profile (106) are configured such that two of such tiles (100) can be coupled to each other at the first and third edges (101, 103) by means of a turning movement. Moreover, the second coupling profile (105) and the third coupling profile (106) are configured such that the two of such tiles (100) can be coupled to each other at the second and third edges (102, 103) by means of a fold-down movement and/or a vertical movement. The proportional relationship between the width and the length of the tile (100) may be chosen at will. Figure 1a shows only one of the many possibilities wherein the tile has a upper side (107) with a rectangular contour (108). It is however also possible that the width and the length

of the tile (100) are the same such that the tile (100) has an upper side (107) with a square contour.

Figure 1b shows a schematic representation of a multi-purpose tile system (110) comprising a plurality of multi-purpose tiles (100) as shown in figure 1a. Although each of the tiles (100) are equivalent, having a first pair of opposing edges consisting of a first edge (101) and an opposite third edge (103) and a second pair of opposing edges consisting of a second edge (102) and an opposing third edge (103), the tiles (100) may, due to the compatibility of the coupling profile of the third edge (103) with the coupling profile of both the first and the second edge (101, 102), be joined in different ways, resulting in differential tile patterns (111, 112) within one multi-purpose tile system (110). In the depicted multi-purpose tile system (110) wherein the individual tiles (110) have an upper side (107) with a rectangular contour (108), the tiles (100) each have a long side (113) and a short side (114). The different tile patterns (111, 112) are hereby created by coupling a first tile pattern (111) of interconnected tiles (100), having their long side (113) connected to the long side (113) of an adjacent tile (100), to a second tile pattern (112) of interconnected tiles (100), having their long side (113) connected to the long side (113) of an adjacent tile (100) and their short side (114) connected to the short side (114) of another adjacent tile (100). The first and second tile patterns (111, 112) are hereby rotated to each other such that the long sides (113) of the tiles (100) of the first tile pattern (111) lie at a 90 degree angle relative to the long sides (113) of the tiles (100) of the second tile pattern (112). This coupling between the different tile patterns (111, 112) is made possible through the connection of the short sides (114) of the tiles (100) of the first tile pattern (111) to the long sides (113) of the tiles (100) of the second tile pattern (112). Installation of the tile system (110) can be realized by angling down the first edge (101) of a tile (100) to be installed with respect to a third edge (103) of an already installed tile (100), which will commonly mutually lock said tiles (100) in both vertical and horizontal direction. During this angling or turning movement of the tile (100) to be installed with respect to the already installed tile (100), the second edge (102) of the tile (100) to be installed will be connected (simultaneously) to the third edge (103) of another already installed tile (100), which is typically realized by lowering or folding down the tile (100) to be installed with respect to the other already installed tile (100) during which the second edge (102) of the tile (100) to be installed and the third edge

(103) of the other already installed tile (100) will be scissored (zipped) into each other. This results in a locking of the tile (100) to be installed with respect to the other already installed tile (100) both in horizontal and vertical direction.

Figure 2a shows a schematic representation of two different types of multi-purpose tiles (201, 202) for use in another embodiment of a multi-purpose tile system (200) according to the invention. Just as the multi-purpose tile (100) shown in figure 1a, each of these tiles (201, 202) comprises a first pair of opposing edges consisting of a first edge (101) and an opposite third edge (103) and a second pair of opposing edges consisting of a second edge (102) and an opposing third edge (103). Again, the first, second and third edges (101, 102, 103) are respectively provided with first, second and third coupling profiles (104, 105, 106), wherein the first coupling profile (104) and the third coupling profile (106) are configured such that two tiles (201, 202) can be coupled to each other at the first and third edges (101, 103) by means of a turning movement, and the second coupling profile (105) and the third coupling profile (106) are configured such that the two tiles (201, 202) can be coupled to each other at the second and third edges (102, 103) by means of a fold-down movement and/or a vertical movement. This time however, there are two different types of tiles (201, 202), wherein the coupling profiles (105, 106) of one pair of opposing edges (102, 103) on the first type of tile (201) are arranged in a mirror-inverted manner relative to the coupling profiles (105, 106) of the corresponding pair of opposing edges (102, 103) on the second type of tile (202). Note that the depicted edge pairs of the different types of tiles (201, 202) that are mirror-inverted are formed by second and third edges (102, 103). However it is likewise possible that the mirror-inverted edge pairs are formed by first and third edges (101, 103). Moreover, the multi-purpose tiles (201, 202) for use in this multi-purpose tile system (200) have an upper side (107) with a parallelogram-shaped contour (208). Two adjoining edges (101, 102, 103) of these tiles (201, 202) hereto either enclose an acute angle (203) or a obtuse angle (204). In this specific embodiment, the first and second edge (101, 102) respectively the third edges (103) enclose an obtuse angle (204) of the same size, while the first and the third edge (101, 103) respectively the second and third edge (102, 103) enclose an acute angle (203) of the same size. The difference in tile configuration and parallelogram-shaped contour (208) of their upper side (107) allows these tiles (201, 202) to form a chevron pattern (205) in a joined state.

Figure 2b shows a schematic representation of a multi-purpose tile system (200) comprising a plurality of multi-purpose tiles (201, 202) as shown in figure 2a. As already discussed previously, the multi-purpose tiles (201, 202) forming part of this multi-purpose tile system (200) come in two different (mirrored) types/configurations. While the difference in tile configuration and parallelogram-shape of their top surface (107) allows these tiles (201, 202) to form a chevron pattern (205) in a joined state, having a first pair of opposing edges consisting of a first edge (101) and an opposite third edge (103) and a second pair of opposing edges consisting of a second edge (102) and an opposing third edge (103), wherein the coupling profile (106) of the third edge (103) is compatible with the coupling profile (104, 105) of both the first and the second edge (101, 102), allows the tiles (201, 202) to be joined in different ways as well, resulting in differential tile patterns (206, 207) within one interconnected multi-purpose tile system (200). Like in the multi-purpose tile system (110) shown in figure 1b, the different tile patterns (206, 207) are created by coupling a first tile pattern (206) of interconnected tiles (201, 202) to a second tile pattern (207) of interconnected tiles (201, 202). Within these separate tile patterns (206, 207), each tile (201, 202) has each of its pairs of opposing edges (101, 103; 102, 103) connected to the edges (101, 102, 103) of adjacent tiles (201, 202) being part of a corresponding pair of opposing edges (101, 103; 102, 103) of said adjacent tiles (201, 202). The coupling of the first and second tile patterns (206, 207) is however realized through the connection of a tile (201, 202) of first tile pattern (206) with an edge (101, 103) forming part of one pair of opposing edges (101, 103) to a tile (201, 202) of second tile pattern (207) with an edge (102, 103) forming part of the other, non-corresponding pair of opposing edges (102, 103). The result is an interconnected, multi-purpose tile system (200) comprising two different tile patterns (206, 207), wherein the edges (101, 102, 103) of adjacent tiles (201, 202) are rotated 70 degrees relative to each other. Installation of the tile system (200) shown in figure 2b is typically analogous to the installation of the tile system (110) shown in figure 1b.

Figure 3a shows a schematic representation of a multi-purpose tile (301) for use in yet another embodiment of a multi-purpose tile system (300) according to the invention. Other than the multi-purpose tiles (100, 201, 202) shown in figures 1a and 2a, each of these tiles (301) comprises three pairs of opposing edges and has

an upper side (107) with a regular hexagon-shaped contour (302). The first pair of opposing edges consists of a first edge (101) and an opposite third edge (103). The second and third pair of opposing edges consist of a second edge (102) and an opposing third edge (103). The first, second and third edges (101, 102, 103) are hereby positioned such that the third edges (103) lie directly adjacent to each other and the second edges (102) lie on both edges adjacent to the first edge (101). The second edges (102), as a consequence, do not lie adjacent to each other. The commonality between these multi-purpose tiles (301) and the multi-purpose tiles (100, 201, 202) shown in figures 1a and 2a is however that the first, second and third edges (101, 102, 103) are respectively provided with first, second and third coupling profiles (104, 105, 106), wherein the first coupling profile (104) and the third coupling profile (106) are configured such that two tiles (301) can be coupled to each other at the first and third edges (101, 103) by means of a turning movement, and the second coupling profile (105) and the third coupling profile (106) are configured such that the two tiles (301) can be coupled to each other at the second and third edges (102, 103) by means of a fold-down movement and/or a vertical movement.

Figure 3b shows a schematic representation of a multi-purpose tile system (300) comprising a plurality of multi-purpose tiles (301) as shown in figure 3a. In the depicted tile formation, the tiles (301) are all identically oriented. Installation of the tile system (300) can be realized in a similar fashion as the tile systems (110, 200) of figures 1b and 2b. By angling down the first edge (101) of a tile (301) to be installed with respect to a third edge (103) of an already installed tile (301), said tiles (301) will commonly mutually lock in both vertical and horizontal direction. During this angling or turning movement of the tile (301) to be installed with respect to the already installed tile (301), one or more second edges (102) of the tile (300) to be installed will be connected (simultaneously) to a third edge (103) of one or more other already installed, adjacent tiles (301), which is typically realized by lowering or folding down the tile (301) to be installed with respect to the other already installed tile(s) (301) during which said second edge(s) (102) of the tile (301) to be installed and the third edge(s) (103) of the other already installed tile(s) (301) will be scissored (zipped) into each other. This results in a locking of the tile (301) to be installed with respect to the other already installed tile(s) (301) both in horizontal and vertical direction.

Figure 4a shows a cross-section along line A-A of a multi-purpose tile (100, 201, 202, 301) as shown in figures 1a, 2a or 3a. In the figure, the first edge (101) and an opposing third edge (103) of the tile (100, 201, 202, 301) are visible, having a first coupling profile (104) and a third coupling profile (106) respectively. The first coupling profile (104) comprises a sideward tongue (400) extending in a direction substantially parallel to the upper side (107) of the tile (100, 201, 202, 301), at least one first downward flank (401) lying at a distance from the sideward tongue (400), and a first downward recess (402) formed between the sideward tongue (400) and the first downward flank (401). Said first downward flank (401) is in particular free of any locking element. The proximal side (403) of the sideward tongue (400) of the first coupling profile (104), facing the first downward recess (402), is hereby downwardly inclined in a direction away from the first downward flank (401). The proximal side (403) of the sideward tongue (400) may comprise a first proximal side contact portion (403'), wherein said first proximal side contact portion (403') co-acts with the third upper contact portion (434a) of the upward locking element (433) of the third coupling profile (106). In order to realise an efficient locking between the first and third coupling profiles (103, 106), the first proximal side contact portion (403') is at an angle (β) with respect to the upper side (107) of the tile (100, 201, 202, 301). Said angle (β) should preferably be situated between 20 degrees and a maximum of 50 degrees. Said absolute values allow for an easy coupling and decoupling. A first transition zone (404), which may also be referred to as a heel, can be defined between the proximal side (403) of the sideward tongue (400) of the first coupling profile (104) and a bottom side (405) of the sideward tongue (400) of the first coupling profile (104), which first transition zone (404) is in this instance curved. The bottom side (405) of the sideward tongue (400) is situated between a tip (444) and the heel (404) of the sideward tongue (400). The bottom side (405) of the sideward tongue (400) is upwardly inclined in a direction towards the first downward flank (401), said inclined bottom side (405) is in particular at an angle (α) with respect to the upper side (107) of the tile (100, 201, 202, 301). The angle (α) may be relatively small, but significantly contributes to the inventive concept of the present invention since it allows an easier angling down movement by reducing the contact surface at the stage of placing the tile (100, 201, 202, 301). The upper side (406) of the first downward recess (402) is in the depicted tile (100, 201, 202, 301) inclined downwardly towards the first downward flank (401). The first coupling

profile (104) may furthermore comprise a first bottom side contact portion (405'), which first bottom side contact portion (405') may, during a coupling movement, partially slide over a support surface (500) which is formed by an upper side of the lower lip (432) of the third coupling profile (106). Moreover, the sideward tongue (400) comprises a sideward tongue contact portion (409), which sideward tongue contact portion (409) co-acts with a portion of the third coupling profile (106). Situated between said sideward tongue contact portion (409) and the upper side (107) of the tile (100, 201, 202, 301) there may be a first closing surface (425).

The third coupling profile (106) comprises a third recess (430) configured for accommodating at least a part of the sideward tongue (400) of the first coupling profile (104) of a further tile (100, 201, 202, 301), said third recess (430) being defined by an upper lip (431) and a lower lip (432), wherein said lower lip (432) is provided with an upward locking element (433). The upper lip (431) further comprises a third closing surface (420) and an upper lip contact portion (424), wherein said third closing surface (420) and upper lip contact portion (424) are situated at opposite sides of a fifth locking element (407), which in this instance is formed by a cut-out portion (408). The proximal side (434) of the upward locking element (433) of the third coupling profile (106), facing the third recess (430), is upwardly inclined in a direction away from the upper lip (431). The proximal side (434) of the upward locking element (433), comprises a third upper and third lower contact portion (434a, 434b), wherein said third upper and third lower contact portions (434a, 434b) are extending in a first direction and a second direction, said second direction deviating from said first direction. The third lower and third upper contact portions (434a, 434b) are connected via at least one intermediate curved zone, which in this instance is a convex zone. Preferably, said third upper contact portion (434a) extending in the first direction is inclined at a second angle (γ) with respect to the lower side (437) of the lower lip (432). The third lower contact portion (434b) extending in the second direction is inclined at a first angle (ϕ) with respect to the lower side (437) of the lower lip (432). Said second angle (γ) may be substantially similar compared to the angle (β) of the first proximal side contact portion (403') of the sideward tongue (400) of a second tile (100, 201, 202, 301), such that these contact portions (434a, 403') mutually co-act in a locked configuration. It is preferred that the second angle (γ) is smaller with respect to the first angle (ϕ). A third transition zone (435) can be defined between the proximal

side (434), in particular the third upper contact portion (434a) thereof, of the upward locking element (433) and an upper side (436) of the upward locking element (433), which third transition zone (435) is in this instance partially deviates from the curved first transition zone (404). The upper side (436) of the upward locking element (433) is in the depicted tile (100, 201, 202, 301) inclined downwardly in a direction facing away from the upper lip (431) of the third coupling profile (106). At the lower side (437) of the lower lip (432) of the third coupling profile (106), a recess (438) is present. This recess (438) allows bending of the lower lip (432) in a downward direction, in particular during coupling. The third coupling profile (106) may further comprise a third locking element (440) that may co-act with a second locking element (422) of the second coupling profile (105) of an adjacent tile (100, 201, 202, 301) to establish a vertical lock between the coupled tiles (100, 201, 202, 301). The third locking element (440) may hereto be provided at a distal side (441) of the lower lip (432) facing away from the third recess (430) and/or at a distal side (442) of the upward locking element (433) facing away from the third recess (430). The third locking element (440) may, as depicted here, specifically be positioned at a distance both from a lower side (437) of the lower lip (432) and an upper side (436) of the upward locking element (433). In the presently depicted tile, the third locking element (440) comprises at least one outward bulge (443) which outward bulge (443) may be provided with an third locking element contact portion (440'), wherein said third locking element contact portion (440') is configured to co-act with at least one second locking element (422) of the second coupling profile (105), in particular with a second locking element contact portion (422') thereof, of an adjacent coupled tile (100, 201, 202, 301) for the purpose of realizing a (vertically) locked coupling.

Figure 4b shows a cross-section along line B-B of a multi-purpose tile (100, 201, 202, 301) as shown in figures 1a, 2a or 3a. In the figure, the second edge (102) and another opposing third edge (103) of the tile (100, 201, 202, 301) are visible, having a second coupling profile (105) and a third coupling profile (106) respectively. Where the third coupling profile (106) matches the third coupling (106) profile provided on the adjacent third edge (103) of the tile (100, 201, 202, 301), which characteristics are given above in the description of the cross-section along line A-A of the multi-purpose tile (100, 201, 202, 301), the second coupling profile (105) comprises a downward tongue (410) extending in a direction substantially

perpendicular to the upper side (107) of the tile (100, 201, 202, 301), at least one second downward flank (411) lying at a distance from the downward tongue (410), and a second downward recess (412) formed between the downward tongue (410) and the second downward flank (411). The proximal side (413) of the downward tongue (410) of the second coupling profile (105), facing the second downward recess (412), is hereby downwardly inclined in a direction away from the second downward flank (411). The proximal side (413) of the downward tongue (410) comprises at least one second proximal contact portion (413'), wherein said second proximal contact portion (413') is at an angle (δ) with respect to the upper side (107) of the tile (100, 201, 202, 301). Preferably, said angle (δ) may be substantially similar compared to the first angle (ϕ) of the third lower contact portion (434b) of the third coupling profile (106) of a second tile (100, 201, 202, 301), such that these contact portions (413', 434b) mutually co-act in a locked configuration. A second transition zone (414), which may also be referred to as a heel can be defined between the proximal side (413) of the downward tongue (410) of the second coupling profile (105) and a bottom side (415) of the downward tongue (410) of the second coupling profile (105), which heel (414) is in this instance provided with a cut-out portion (414'). The cut-out portion (414') is provided such as to facilitate the uncoupling of the second coupling and third coupling profiles (105, 106). Said cut-out portion (414') is configured to allow the downward tongue (410) to pass over the convex portion connecting the third upper and lower contact portion (434a, 434b) of the third locking element (433). A distal side (416) of the downward tongue (410), facing away from the second downward recess (412), comprises at least a vertical upper wall part (417) adjacent to the upper side (107) of the tile (100, 201, 202, 301), and, adjacent to and located below said vertical upper wall part (417), a fourth locking element (418). Said fourth locking element (418) is in particular extending a distance (D) beyond the vertical upper wall part (417). The fourth locking element (418) is configured to co-act with a fifth locking element (407), wherein said fifth locking element (407) is in this instance formed by a cut-out part (408) of the upper lip (431) of the third coupling profile (106), wherein said cut-out part (408) of the fifth locking element (407) is configured to receive said protruding portion of the fourth locking element (418). The lower wall part (419) of distal side (416) of the downward tongue (410) may moreover be connected to the bottom side (415) of the downward tongue (410). Said bottom side (415) may comprise a bottom side contact portion (415') which may rest on a part of the

support surface (500) of a third coupling profile (106). Said bottom side contact portion (415') is in particular formed by the part of the downward tongue (410) extending the furthest away from the upper surface (107). The upper side (421) of the second downward recess (412) is in the depicted tile (100, 201, 202, 301) inclined downwardly towards the second downward flank (411). The second coupling profile (105) may furthermore comprise at least one second locking element (422) which may, in a coupled position, co-act with a third locking element (440) of a third coupling profile (106) of an adjacent tile (100, 201, 202, 301) to establish a vertical lock between the tiles (100, 201, 202, 301). The second locking element (422) may hereto be provided at the second downward flank (411) of the second coupling profile (105). In the presently depicted tile (100, 201, 202, 301), the second locking element (422) comprises at least one second locking recess (423) adapted to at least partially receive the outward bulge (443) of the third locking element (440) of an adjacent coupled tile (100, 201, 202, 301) for the purpose of realizing a (vertically) locked coupling. In particular a second locking element contact portion (422') of the second locking element (422) is configured to, in a coupled position, abut against the third locking element contact portion (440') of the third locking element (440) of an adjacent coupled tile (100, 201, 202, 301), such that the second and third coupling profile (105, 106) are locked both vertically and horizontally.

The coupling profiles (105, 106) of the multi-purpose tiles (100, 201, 202, 301) shown in figure 4b may optionally be provided with chamfers (bevels) (450) at or near the upper side (107) of the tiles (100, 201, 202, 301). The coupling profiles (104, 106) of the multi-purpose tiles (100, 201, 202, 301) shown in figure 4a may optionally be provided with grouts (451) at or near the upper side (107) of the tiles (100, 201, 202, 301). The grouts (451) may be either substantially rectangular shaped, such as seen at or near the upper side (107) of the first coupling profile (104). Said rectangular grout (451) may be either situated entirely on the first coupling profile (451) of one tile (100, 201, 202, 301) in figure 4a, or may be situated on both a first and third coupling profile (104, 106) of two adjacent tiles (100, 201, 202, 301). However, it is also conceivable that a rounded grout (451) is applied, such as shown at or near the upper side (107) of the third coupling profile (106) in figure 4a. An advantage of these rounded grouts (451) is that water spilled on the upper side (107) of the tile (100, 201, 202, 301) will automatically flow

towards the lowest part of said rounded grout, which may prevent water from ending up between two adjacent tiles (100, 201, 202. 301). The skilled person would readily realize that any combination of grouts (451) and/or bevels (450) may be applied.

Figures 5a- 5c show a cross-section of two multi-purpose tiles (100, 201, 202, 301) as shown in figures 1a, 2a or 3a in a first, second and third coupled condition respectively. Figures 5a and 5b each depict a mutual coupling of a first and third coupling profile (104, 106), wherein, figure 5a depicts a coupling of a first tile (100, 201, 202, 301) on the right with a second tile (100, 201, 202, 301) on the left, wherein the first tile (100, 201, 202, 301) is a cross-section along line A-A, and the second tile (100, 201, 202, 301) is a cross-section along line B-B. Figure 5b depicts a coupling of a first tile (100, 201, 202, 301) on the right with a second tile (100, 201, 202, 301) on the left, wherein the first tile (100, 201, 202, 301) is a cross-section along line A-A, and the second tile (100, 201, 202, 301) is also a cross-section along line A-A. Figure 5c depicts a mutual coupling of a second and third coupling profile (105, 106), wherein figure 5c depicts a coupling of a first tile (100, 201, 202, 301) on the right with a second tile (100, 201, 202, 301) on the left, wherein the first tile (100, 201, 202, 301) is a cross-section along line B-B, and the second tile (100, 201, 202, 301) is a cross-section along line B-B as well.

In the figures 5a and 5b it can be seen that in coupled condition, at least a part of the sideward tongue (400) of the first coupling profile (104) of a tile (100, 201, 202, 301) is inserted into the third recess (430) of the third coupling profile (106) of an adjacent tile (100, 201, 202, 301), and at least a part of the upward locking element (433) of the third coupling profile (106) is inserted into the first downward recess (402) of the first coupling profile (104). To establish a fixation in the mutual position of the first coupling profile (104) and the third coupling profile (106), a part of a bottom side (405) of the sideward tongue (400), in particular the first bottom side contact portion (405') of the first coupling profile (104) may hereby be supported by a support surface (500), in particular by a second support portion (500a) of the support surface (500), of the third recess (430) of the third coupling profile (106). The first edge (101) and the third edge (103), in coupled condition, define a first closing surface (501) defined as a first vertical plane (502) through the upper edges (503) of the coupled tiles (100, 201, 202, 301). In particular the third closing surface

(430) of the third edge (103) abuts the first closing surface (425) of the first edge (101). The first closing surface (501) as defined by the first vertical plane (502) is thus laying between the third closing surface (430) and the first closing surface (425). Each of the sideward tongue (400) and the third recess (430) hereby extends through said first vertical plane (502).

At least a portion, in particular a distal portion of the sideward tongue (400) extends beyond the left side of the first vertical plane (502), where it clamps between a portion of the support surface (500), in particular the first support portion (500a) and a part of the upper lip contact portion (424). This clamping may be realized in different ways. It may be conceivable that the thickness of the sideward tongue (400), in particular defined by a vertical line and/or portion extending from the bottom side contact portion (405') substantially vertically towards the sideward tongue contact portion (409), is larger compared to a vertical line and/or portion extending from the third support portion (500a) and a part of the upper lip contact portion (424), in particular the part of the upper lip contact portion (424) located vertically above the third support portion (500a).The different thickness may be a result of a marginal difference in the angle (i.e. a difference in angle of around 1 degree) between a first and second angle, the first angle may be defined by the upper side (107) and the sideward tongue contact portion (409), and the second angle may be defined by the upper side (107) and the upper lip contact portion (424). The difference in thickness allows the sideward tongue (400) to be clamped and vertically locking the mutual tiles (100, 201, 202, 301). It is also conceivable that the shape of the sideward tongue (400) follows the contours of the inward portion of the third recess (430), such that in locked position the sideward tongue (400) exactly fits in said inward portion of the third recess (430) and mutually vertically locking the two tiles (100, 201, 202, 301). In locked configuration, there is a first cavity (506) on the left of the tip (444) of the sideward tongue (400). This cavity (506) allows for a more easy coupling and decoupling of the two tiles (100, 201, 202, 301), especially since the coupling and decoupling of the first and third coupling profile (104, 106) occur under an angling movement, wherein the sideward tongue (400) is angled into or out of the third recess (430). During this angling movement, the cavity (506) allows the tip (444) of the sideward tongue (506) to move, preventing that the sideward tongue (400) remains stuck as a result of friction between the tip (444) of the sideward tongue (400) and the third recess

(430). Moreover, during this angling movement while coupling or decoupling the first and third coupling profiles (104, 106), the bottom side contact portion (405') functions as a gliding line contact, due to which line contact said bottom side contact portion (405') may easily slide over the support surface (500) of the third coupling profile (106). In the coupled position, the bottom side contact portion (405') will be supported by the third support potion (500a). Towards the heel (404) of the sideward tongue (400) there may be, in a coupled configuration of the first and third coupling profiles (104, 106), a (triangular) second cavity (507). Due to said second cavity (507) there may be more space available during the angling movement for the sideward tongue (400), hence as a result of which allows for an easier coupling of the first and third coupling profiles (104, 106). In the coupled configuration, the first proximal side contact portion (403') abuts the upper contact portion (434a) of the upward locking element (433), which results in a horizontal locking of the two tiles (100, 201, 202, 301). This horizontal locking may be realized by friction between the first proximal side contact portion (403') and the upper contact portion (434a) of the upward locking element (433). On the right of the distal side (442) of the upward locking element (433) facing away from the third recess (430) there may be, in a coupled configuration of the first and third coupling profiles (104, 106), a third cavity (508) which defines an open space (508) between the first downward flank (401) and the lower lip (431), in particular the upward locking element (433). Due to this open space (508) the downward movement of the panel may be easier since there is substantially less, preferably no, friction between the first downward flank (401) and the distal side (442) of the upward locking element (433) facing away from the third recess (430).

Figure 5c moreover shows that in coupled condition, at least a part of the downward tongue (410) of the second coupling profile (105) is inserted in the third recess (430) of the third coupling profile (106), and at least a part of the upward locking element (433) of the third coupling profile (106) is inserted in the second downward recess (412) of the second coupling profile (105). To establish a fixation in the mutual position of the second coupling profile (105) and the third coupling profile (106), a part of a bottom side (415) of the downward tongue (410), in particular the bottom side contact portion (415') of the second coupling profile (105) may hereby be supported by a support surface (500), in particular by a second support portion (500b) of the support surface (500), of the third recess (430) of the

third coupling profile (106). The second edge (102) and the third edge (103), in coupled condition, define a second closing surface (504) defining a second vertical plane (505) through the upper edges (503) of the coupled tiles (100, 201, 202, 301). The fourth locking element (418), or at least a part thereof, and the remaining part of the downward tongue (410) are situated at opposite sides of said second vertical plane (505), while the third recess (430) extends through said second vertical plane (505). Coupling of the second and third coupling profiles (105, 106) may be realized by lowering or folding down the second coupling profile (105), in particular the downward tongue (410) into the third coupling profile (106), in particular into the third recess (430) of an adjacent tile (100, 201, 202, 301). In this instance, at the top side (107) near the second vertical plane (505) there is a chamfer (bevel) provided on both the top side (107) of the second coupling profile (105) as well as the third coupling profile (106). These two chamfers mutually form a bevel at the vertical plane (505). On opposite sides of the vertical plane, near the top side (107) of the tiles (100, 201, 202, 301) the third closing surface (420) of the third coupling profile (106) buts the vertical upper wall part (417) of the second coupling profile (105). Near the bottom portion of the vertical wall part (417) there is a cut-out part (408), said cut out part (408) forms a recess which extends in a direction facing away from the second vertical plane (505). Said cut-out part (408) is in particular configured for receiving the fourth locking element (418) during the folding down movement, such that a vertical locking may be realized. In a coupled condition, at least a part of the fourth locking element (418) is located on the side of the second vertical plane (505) facing away from the downward tongue (410). In order to make sure the entire fourth locking element (418) may be received by the cut-out part (408), the cut-out part (408) is larger compared to the fourth locking element (418). The fourth locking element (418) preferably has a maximum width between 0.008 mm to 0.12 mm, measured in a direction perpendicular to, and from the vertical upper wall part (417). A bottom side contact portion (415') of the second coupling profile (105) is supported by a part of the support surface (500) of the third coupling profile (106). In particular, the bottom side contact portion (415') is supported by a second support portion (500b). Located towards the right of the bottom side contact portion (415') is a cut-out portion (414'), which serves to make a decoupling movement easier. The cut-out portion (414') in particular may allow the downward tongue (410) to move over the proximal side (434) of the upward locking element (433), in particular over the third upper and third lower contact

portion (434a, 434b) thereof. Said third lower contact portion (434b) serves, in combination with the second proximal contact portion (413'), to achieve a horizontal locking of the downward tongue (410). This horizontal locking may be a result of the friction between the third lower contact portion (434b) and the second proximal contact portion (413'). The second proximal contact portion (413') may enclose an angle with the upper side (107) which may maximally be 70 degrees, but preferably is kept below the 65 degrees. Keeping the angle below this level will allow for an easier decoupling of the second and third coupling profiles (105, 106). Moreover, the downward tongue (410) may be shaped such that it, in coupled configuration, is clamped in the third coupling profile (106), in particular between the third closing surface (420) and the third lower contact portion (434b) thereof. Near the distal side (442) of the upward locking element (433), in coupled condition, there remains a fourth cavity (509). During the folding down movement, there is a minimal elastic deformation of the neck portion, i.e. the thinnest portion of the second coupling profile (105), which allows the second locking element (422) to move over the third locking element (440), formed by the outward bulge (443). In the final position, i.e. when the two tiles (100, 201, 202, 301) are flush, the third locking element (440) comprises a bulge (443) with an inclined, substantially flat third locking surface (440'), and wherein the second locking element (422) comprises a recess (423) partially defined by an inclined, substantially flat second locking surface (422'), wherein said recess (423) is configured to accommodate at least a part of said bulge (443), and wherein said second locking surface (422') is configured to face, and preferably co-act, with said third locking surface (440').

The ordinal numbers used in this document, like “first”, “second”, “third”, etcetera, are used only for identification purposes. Hence, the use of the expressions “third locking element” and “second locking element” does therefore not necessarily require the co-presence of a “first locking element”.

The tiles of the tile system according to the invention may also be referred to as panels. The core layer may also be referred to as base layer, and may be composed of a plurality of sub-layers, which may e.g. include a reinforcement layer, such as a glass-fiber layer. The coupling profiles may also be referred to as coupling parts or as connecting profiles. By "complementary" coupling profiles is meant that these coupling profiles can cooperate with each other. However, to this

end, the complementary coupling profiles do not necessarily have to have complementary forms. By locking in "vertical direction" is meant locking in a direction perpendicular to the plane of the tile. By locking in "horizontal direction" is meant locking in a direction perpendicular to the respective coupled edges of two tiles and parallel to or falling together with the plane defined by the tiles. In case in this document reference is made to a “floor tile” or “floor panel”, these expressions may be replaced by expressions like “tile”, “wall tile”, “ceiling tile”, “covering tile”, “panel”, “wall panel”, “ceiling panel”, “covering panel”. In the context of this document, the expressions “foamed composite” and “foamed plastic material” (or “foam plastic material”) are interchangeable, wherein in fact the foamed composite comprises a foamed mixture comprising at least one (thermo)plastic material and at least one filler (non-polymeric material).

The above-described inventive concepts are illustrated by several illustrative embodiments. It is conceivable that individual inventive concepts of an embodiment may be applied without, in doing so, also applying other details of said embodiment. It is not necessary to elaborate on examples of all conceivable combinations of the above-described inventive concepts, as a person skilled in the art will understand numerous inventive concepts can be (re)combined in order to arrive at a specific application. It is explicitly emphasized here that all mathematical combinations are possible among the features mentioned above and referred to in the claims as filed, as far as the respectively obtained combination does not include any contradictory characteristics. In this manner, this application thus also forms a reservoir of possibilities of claimed subject-matter.

It will be apparent that the invention is not limited to the working examples shown and described herein, but that numerous variants are possible within the scope of the attached claims that will be obvious to a person skilled in the art.

The verb “comprise” and conjugations thereof used in this patent publication are understood to mean not only “comprise”, but are also understood to mean the phrases “contain”, “substantially consist of”, “formed by” and conjugations thereof.

Conclusies

1. Multifunctioneel tegelsysteem, in het bijzonder een vloertegelsysteem, omvattende meerdere multifunctionele tegels, in het bijzonder vloertegels, waarbij de tegels, en bij voorkeur elke tegel, omvatten:

- ten minste een eerste zijde met een eerste koppelprofiel omvattende:
  - een zijwaartse tong, zich uitstrekkende een richting hoofdzakelijk parallel aan de bovenkant van de tegel,
  - ten minste een op afstand van de zijwaartse tong gelegen eerste neerwaartse flank, en
  - een eerste neerwaartse uitsparing gevormd tussen de zijwaartse tong en de eerste neerwaartse flank,
- ten minste een tweede zijde met een tweede koppelprofiel omvattende:
  - een neerwaartse tong, zich uitstrekkende in een richting hoofdzakelijk loodrecht ten opzichte van de bovenkant van de tegel,
  - ten minste een op afstand van de neerwaartse tong gelegen tweede neerwaartse flank,
  - een tussen de neerwaartse tong en neerwaartse flank gevormde tweede neerwaartse uitsparing, en
  - ten minste een tweede vergrendelingselement voorzien op de tweede neerwaartse flank van het tweede koppelprofiel
- ten minste een derde zijde, en bij voorkeur ten minste twee derde zijden, elke derde zijde met een derde koppelprofiel omvattende:
  - een derde uitsparing die is ingericht voor het accommoderen van ten minste een deel van de zijwaartse tong van het eerste koppelprofiel van een verdere tegel en ten minste een deel van de neerwaartse tong van een verdere tegel, genoemde derde uitsparing is gedefinieerd door een bovenlip en een onderlip, waarbij genoemde onderlip is voorzien van een opwaarts vergrendelingselement, en
  - ten minste een derde vergrendelingselement voorzien op een van de derde uitsparing afgekeerde distale zijde van de onderlip en/of een van de derde uitsparing afgekeerde distale zijde van het opwaartse vergrendelingselement,

waarbij de proximale zijde van het opwaartse vergrendelingselement van het derde koppelprofiel, gericht naar de derde uitsparing, volledig opwaarts hellend in een

richting weg van de bovenlip, waarbij de proximale zijde van het opwaartse vergrendelingselement een derde lager contactgedeelte omvat, zich uitstrekkende in een eerste richting en een derde bovenste contactgedeelte contactgedeelte uitstrekkende in een tweede richting, afwijkend van de eerste richting, waarbij het eerste koppelprofiel en het derde koppelprofiel zodanig zijn ingericht dat twee van zulke tegels onderling gekoppeld kunnen worden bij de eerste en derde zijde door een draaibeweging, waarbij, in gekoppelde toestand:

- ten minste een deel van de zijwaartse tong van het eerste koppelprofiel van een tegel is ingevoegd in de derde uitsparing van het derde koppelprofiel van een aangrenzende tegel,
- ten minste een deel van het opwaartse vergrendelingselement van het derde koppelprofiel is ingevoegd in de eerste neerwaartse uitsparing van het eerste koppelprofiel, en
- een proximale zijde van de zijwaartse tong, gericht naar de eerste neerwaartse flank, werkt samen met het derde bovenste contactgedeelte van het opwaartse vergrendelingselement van het derde koppelprofiel, en

waarbij het tweede koppelprofiel en het derde koppelprofiel zodanig zijn ingericht dat de twee van dergelijke tegels onderling gekoppeld kunnen worden met de tweede en derde zijde, bij voorkeur door gebruik van een neerwaartse vouwbeweging en/of een verticale beweging, waarbij in een gekoppelde toestand:

- ten minste een deel van de neerwaartse tong van het tweede koppelprofiel is ingebracht in de derde uitsparing van het derde koppelprofiel van een aangrenzende tegel,
- ten minste een deel van het opwaartse vergrendelingselement van het derde koppelprofiel is ingebracht in de tweede neerwaartse uitsparing van het tweede koppelprofiel,
- ten minste een tweede vergrendelingselement is gericht naar, en bij voorkeur samenwerkend met, ten minste een derde vergrendelingselement voor het realiseren van een verticaal vergrendelingseffect, en
- een proximale zijde van de neerwaartse tong, gericht naar de tweede neerwaartse flank, van het tweede koppelprofiel samenwerkt met het derde lagere contactgedeelte van het opwaartse vergrendelingselement van het derde koppelprofiel.

2. Multifunctioneel tegelsysteem, in bijzonder een vloertegelsysteem, bij voorkeur volgens conclusie 1, omvattende meerdere multifunctionele tegels, in het bijzonder vloertegels,

waarbij ten minste een eerste tegel ten minste een eerste zijde omvat met een eerste koppelprofiel omvattende:

- een zijwaartse tong, zich uitstrekkende een richting hoofdzakelijk parallel aan de bovenkant van de tegel,
- ten minste een op afstand van de zijwaartse tong gelegen eerste neerwaartse flank, en
- een eerste neerwaartse uitsparing gevormd tussen de zijwaartse tong en de eerste neerwaartse flank,

waarbij ten minste een tweede tegel ten minste een tweede zijde omvat met een tweede koppelprofiel omvattende:

- een neerwaartse tong, zich uitstrekkende in een richting hoofdzakelijk loodrecht ten opzichte van de bovenkant van de tegel,
- ten minste een op afstand van de neerwaartse tong gelegen tweede neerwaartse flank,
- een tussen de neerwaartse tong en neerwaartse flank gevormde tweede neerwaartse uitsparing, en
- ten minste een tweede vergrendelingselement voorzien op de tweede neerwaartse flank van het tweede koppelprofiel, en

waarbij ten minste een derde tegel ten minste een derde zijde omvat met een derde koppelprofiel omvattende:

- een derde uitsparing die is ingericht voor het accommoderen van ten minste een deel van de zijwaartse tong van het eerste koppelprofiel van een verdere tegel en ten minste een deel van de neerwaartse tong van een verdere tegel, genoemde derde uitsparing is gedefinieerd door een bovenlip en een onderlip, waarbij genoemde onderlip is voorzien van een opwaarts vergrendelingselement, en
- ten minste een derde vergrendelingselement voorzien op een van de derde uitsparing afgekeerde distale zijde van de onderlip en/of een van de derde uitsparing afgekeerde distale zijde van het opwaartse vergrendelingselement,
- waarbij de proximale zijde van het opwaartse vergrendelingselement van het derde koppelprofiel, gericht naar de derde uitsparing, volledig

opwaarts hellend in een richting weg van de bovenlip, waarbij de proximale zijde van het opwaartse vergrendelingselement een derde lager contactgedeelte omvat, zich uitstrekkende in een eerste richting en een derde bovenste contactgedeelte contactgedeelte zich uitstrekkende in een tweede richting, optioneel afwijkend van de eerste richting, en

waarbij het eerste koppelprofiel en het derde koppelprofiel zodanig ingericht zijn dat twee van dergelijke tegels onderling gekoppeld kunnen worden met de eerste en de derde zijde door een draaibeweging, waarbij, in gekoppelde toestand:

- ten minste een deel van de zijwaartse tong van het eerste koppelprofiel van een eerste tegel is ingevoegd in de derde uitsparing van het derde koppelprofiel van een derde tegel,
- ten minste een deel van het opwaartse vergrendelingselement van het derde koppelprofiel is ingevoegd in de eerste neerwaartse uitsparing van het eerste koppelprofiel, en
- een proximale zijde van de zijwaartse tong, gericht naar de eerste neerwaartse flank, werkt samen met het derde bovenste contactgedeelte van het opwaartse vergrendelingselement van het derde koppelprofiel, en

waarbij het tweede koppelprofiel en het derde koppelprofiel zodanig zijn ingericht dat de twee van dergelijke tegels onderling gekoppeld kunnen worden bij de tweede en derde zijde, bij voorkeur door gebruik van een neerwaartse vouwbeweging en/of een verticale beweging, waarbij in een gekoppelde toestand:

- ten minste een deel van de neerwaartse tong van het tweede koppelprofiel van een tweede tegel is ingebracht in de derde uitsparing van het derde koppelprofiel van een derde tegel,
- ten minste een deel van het opwaartse vergrendelingselement van het derde koppelprofiel is ingebracht in de tweede neerwaartse uitsparing van het tweede koppelprofiel,
- ten minste een tweede vergrendelingselement is gericht naar, en bij voorkeur samenwerkend met, ten minste een derde vergrendelingselement voor het realiseren van een verticaal vergrendelingseffect,
- en
- een proximale zijde van de neerwaartse tong, gericht naar de tweede neerwaartse flank, van het tweede koppelprofiel samenwerkt met het derde

lagere contactgedeelte van het opwaartse vergrendelingselement van het derde koppelprofiel, en

waarbij de eerste tegel en/of de tweede tegel en/of de derde tegel gevormd mogen zijn door dezelfde tegel.

3. Tegelsysteem volgens één van de voorgaande conclusies, waarbij derde lagere contactgedeelte aansluit op het derde bovenste contactgedeelte, waarbij het derde lagere contactgedeelte in een eerste richting uitstrekt, en het derde bovenste contactgedeelte in een tweede richting uitstrekt, afwijkend van de eerste richting.

4. Tegelsysteem volgens één van de voorgaande conclusies, waarbij derde lagere contactgedeelte via ten minste een tussenliggende gebogen zone, bij voorkeur een convexe zone, aansluit op het derde bovenste contactgedeelte, waarbij het derde lagere contactgedeelte zich uitstrekt in een eerste richting en het derde bovenste contactgedeelte zich uitstrekt in een tweede richting, afwijkend van de eerste richting.

5. Tegelsysteem volgens één van de voorgaande conclusies, waarbij een eerste hoek die is ingesloten door de eerste richting waarin het derde lagere contactgedeelte zich uitstrekt en een vlak gedefinieerd door de tegel, groter is dan een tweede hoek die is ingesloten door de tweede richting waarin het derde bovenste contactgedeelte zich uitstrekt en een vlak gedefinieerd door de tegel.

6. Tegelsysteem volgens één van de voorgaande conclusies, waarbij de eerste richting waarin het derde lagere contactgedeelte zich uitstrekt een hoek insluit met een vlak gedefinieerd door de tegel van 50° tot 85°, bij voorkeur tussen 60° en 75°, nog meer bij voorkeur tussen 63° en 67°, in het bijzonder ongeveer 65°.

7. Tegelsysteem volgens één van de voorgaande conclusies, waarbij de tweede richting waarin het derde bovenste contactgedeelte zich uitstrekt een hoek insluit met een vlak gedefinieerd door de tegel van 30° tot 65°, bij voorkeur tussen 40° en 55°, nog meer bij voorkeur tussen 47° en 53°, in het bijzonder ongeveer 50°.

8. Tegelsysteem volgens één van de voorgaande conclusies, waarbij in gekoppelde toestand van het eerste koppelprofiel en het derde koppelprofiel van

aangrenzende tegels, de proximale zijde van de zijwaartse tong, gericht naar de eerste neerwaartse flank, slechts samenwerkt met het derde bovenste contactgedeelte van het opwaartse vergrendelingselement van het derde koppelprofiel

9. Tegelsysteem volgens één van de voorgaande conclusies, waarbij, in gekoppelde toestand van het tweede koppelprofiel en het derde koppelprofiel van aangrenzende tegels, de proximale zijde van de neerwaartse tong, gericht naar de tweede neerwaartse flank, uitsluitend samenwerkt met het derde lagere contactgedeelte van het opwaartse vergrendelingselement van het derde koppelprofiel.

10. Tegelsysteem volgens één van de voorgaande conclusies, waarbij een hiel van de neerwaartse tong, gedefinieerd door een onderkant van de neerwaartse tong en de proximale zijde van de neerwaartse tong, is voorzien van een uitgesneden gedeelte voor het faciliteren van het ontkoppelen van het tweede koppelprofiel en het derde koppelprofiel.

11. Tegelsysteem volgens conclusie 10, waarbij de maximale hoogte van het uitgesneden gedeelte ten minste 0,2 mm is.

12. Tegelsysteem volgens één van de voorgaande conclusies, waarbij de eerste zijde en de derde zijde, in gekoppelde toestand, een eerste sluitvlak definiëren welke een eerste verticaal vlak definieert door de bovenste oppervlakken van de gekoppelde tegels of ten minste de locatie waar de tegels samenkomen bij de bovenkant van de tegels.

13. Tegelsysteem volgens conclusie 12, waarbij het eerste koppelprofiel en het derde koppelprofiel zodanig zijn ingericht dat in gekoppelde toestand, elk van de zijwaartse tong en de derde uitsparing strekt zich uit door genoemd eerste verticaal vlak.

14. Tegelsysteem volgens één van de voorgaande conclusies, waarbij de tweede zijde en de derde zijde, in gekoppelde toestand, een tweede sluitvlak definiëren, welke een tweede verticaal vlak definieert door de bovenste zijden van de

gekoppelde tegels of ten minste de locatie waarde tegels samenkomen bij de bovenste zijde van de tegels.

15. Tegelsysteem volgens conclusie 14, waarbij het tweede koppelprofiel en het derde koppelprofiel zodanig zijn ingericht dat in gekoppelde toestand, de neerwaartse tong aan een zijde van het tweede verticale vlak is gepositioneerd, en de derde uitsparing door genoemd tweede verticale vlak uitstrekt.

16. Tegelsysteem volgens één van de voorgaande conclusies, waarbij de distale zijde van de neerwaartse tong, afgekeerd van de tweede neerwaartse flank, is voorzien van een vierde vergrendelingselement, en waarbij de bovenlip van het derde koppelprofiel is voorzien van een vijfde vergrendelingselement ingericht voor het gericht zijn naar, en bij voorkeur samenwerken met, genoemd vierde vergrendelingselement voor het bereiken van een verticaal vergrendelingseffect, in gekoppelde toestand van het tweede koppelprofiel en het derde koppelprofiel van aangrenzende tegels.

17. Tegelsysteem volgens conclusie 14 of 15 en conclusie 16, waarbij, in gekoppelde toestand van het tweede koppelprofiel en het derde koppelprofiel van aangrenzende tegels, het vierde vergrendelingselement en het resterende deel van de neerwaartse tong aan tegenoverliggende zijden van het tweede verticale vlak zijn gelegen.

18. Tegelsysteem volgens conclusie 14 of 15 en conclusie 16 of 17, waarbij, in gekoppelde toestand van het tweede koppelprofiel en het derde koppelprofiel van aangrenzende tegels, het vijfde vergrendelingselement en het resterende deel van de bovenlip aan tegenoverliggende zijden van het tweede verticale vlak zijn gelegen.

19. Tegelsysteem volgens één van de conclusies 16-18, waarbij het vierde vergrendelingselement een bult omvat met een bovenzijde die zich in een derde richting uitstrekt, waarbij genoemde bovenzijde zich neerwaarts hellend uitstrekt in een richting weg van de neerwaartse flank, waarbij, een derde hoek ingesloten door genoemde derde richting en een vlak gedefinieerd door de tegel tussen 25° en 35° is, bij voorkeur tussen 28° en 32°, in het bijzonder ongeveer 30°.

20. Tegelsysteem volgens conclusie 14 of 15, en één van de conclusies 16-19, waarbij het vierde vergrendelingselement een maximale breedte heeft ten opzichte van het tweede verticale vlak van 0,06 tot 0,16 mm, bij voorkeur van 0,08 tot 0,12 mm.

21. Tegelsysteem volgens één van de voorgaande conclusies, waarbij een bovenzijde van de onderlip een ondersteuningsoppervlak definieert voor zowel de neerwaartse tong van het tweede koppelprofiel van een aangrenzende tegel, als ook de zijwaartse tong van het eerste koppelprofiel van een aangrenzende tegel.

22. Tegelsysteem volgens conclusie 21, waarbij het ondersteuningsoppervlak van de onderlip een tweede ondersteuningsgedeelte omvat voor het ondersteunen van de neerwaartse tong van het tweede koppelprofiel van een aangrenzende tegel, en een eerste ondersteuningsgedeelte voor het ondersteunen van de zijwaartse tong van het eerste koppelprofiel van een aangrenzende tegel, waarbij het tweede ondersteuningsgedeelte en het eerste ondersteuningsgedeelte op afstand van elkaar zijn gepositioneerd.

23. Tegelsysteem volgens conclusie 22, waarbij het tweede ondersteuningsgedeelte dichterbij het opwaartse vergrendelingselement is gelegen dan het eerste ondersteuningsgedeelte.

24. Tegelsysteem volgens één van de conclusies 21-23, waarbij het ondersteuningsoppervlak van de onderlip in hoofdzaak vlak is.

25. Tegelsysteem volgens één van de conclusies 24-14, waarbij het ondersteuningsoppervlak van de onderlip neerwaarts hellend is in de richting naar het opwaarts gerichte vergrendelingselement.

26. Tegelsysteem volgens conclusie 25, waarbij een richting waarin het hellende ondersteuningsoppervlak zich uitstrekt en een door de tegel gedefinieerd vlak onderling een hoek insluiten van tussen 1° en 4°, in het bijzonder 2° tot 3°.

27. Tegelsysteem volgens één van de conclusies 22-26, waarbij, in een dwarsdoorsnede aanzicht van het derde koppelprofiel, de breedte van het eerste ondersteuningsgedeelte smaller is dan de breedte van het tweede ondersteuningsgedeelte.

28. Tegelsysteem volgens één van de conclusies 22-27, waarbij, in een dwarsdoorsnede aanzicht van het derde koppelprofiel, het eerste ondersteuningsgedeelte een puntcontact definieert en het tweede ondersteuningsgedeelte een lijncontact definieert.

29. Tegelsysteem volgens één van de conclusies 22-28, waarbij een tussengelegen gedeelte van het ondersteuningsoppervlak van de onderlip, gelegen tussen het tweede ondersteuningsgedeelte en het eerste ondersteuningsgedeelte, is ingericht om als geleidingsoppervlak te dienen voor het geleiden van de zijwaartse tong van het eerste koppelprofiel tijdens het koppelen van het eerste koppelprofiel met een derde koppelprofiel van aangrenzende tegels.

30. Tegelsysteem volgens één van de voorgaande conclusies, waarbij de zijwaartse tong een punt omvat, afgekeerd van de eerste neerwaartse flank, en een hiel, gericht naar de eerste neerwaartse flank, waarbij een onderkant van de zijwaartse tong gelegen tussen genoemde punt en genoemde hiel opwaarts hellend is in een richting naar de eerste neerwaartse flank.

31. Tegelsysteem volgens conclusie 30, waarbij de richting waarin de onderkant van de zijwaartse tong zich uitstrekt en een door de tegel gedefinieerd vlak onderling een hoek insluiten van tussen 2° en 10°, bij voorkeur tussen 4° en 6°, in het bijzonder ongeveer 5°.

32. Tegelsysteem volgens één van de voorgaande conclusies, waarbij het eerste koppelprofiel en het derde koppelprofiel zijn ingericht om toe te staan dat deze koppelprofielen, in gekoppelde toestand, door een opwaartse draaibeweging ontkoppeld kunnen worden.

33. Tegelsysteem volgens één van de voorgaande conclusies, waarbij het tweede koppelprofiel en het derde koppelprofiel zijn ingericht om toe te staan dat

deze koppelprofielen, in gekoppelde toestand, door een opwaartse draaibeweging ontkoppeld kunnen worden.

34. Tegelsysteem volgens één van de voorgaande conclusies, waarbij de eerste neerwaartse flank vrij is van elk vergrendelingselement.

35. Tegelsysteem volgens één van de voorgaande conclusies, waarbij elke tegel een eerste paar tegenoverliggende zijden omvat bestaande uit de eerste zijde en de derde zijde.

36. Tegelsysteem volgens één van de voorgaande conclusies, waarbij elke tegel een eerste paar tegenoverliggende zijden omvat bestaande uit de tweede zijde en de derde zijde.

37. Tegelsysteem volgens één van de voorgaande conclusies, waarbij het eerste koppelprofiel en het derde koppelprofiel zijn ingericht voor het aan elkaar vergrendelen van tegels zowel verticaal als horizontaal.

38. Tegelsysteem volgens één van de voorgaande conclusies, waarbij het tweede koppelprofiel en het derde koppelprofiel zijn ingericht voor het aan elkaar vergrendelen van tegels zowel verticaal als horizontaal.

39. Tegelsysteem volgens één van de voorgaande conclusies, waarbij het derde vergrendelingselement ten minste één buitenwaartse bult omvat, en dat het tweede vergrendelingselement ten minste een tweede vergrendelingsuitsparing omvat, en waarin de bult en uitsparing een in hoofdzaak complementaire vorm hebben.

40. Tegelsysteem volgens één van de voorgaande conclusies, waarbij ten minste een tweede vergrendelingselement van het tweede koppelprofiel is voorzien op een distale zijde van de neerwaartse tong afgekeerd van de tweede neerwaartse uitsparing, en waarbij ten minste een derde vergrendelingselement van het derde koppelprofiel is voorzien op een zijde van de bovenlip, in gekoppelde toestand gericht naar genoemde distale zijde van de neerwaartse tong van het tweede koppelprofiel van een aangrenzende tegel.

41. Tegelsysteem volgens één van de voorgaande conclusies, waarbij ten minste een deel van de proximale zijde van de neerwaartse tong van het tweede koppelprofiel, gericht naar de tweede neerwaartse uitsparing, zich neerwaarts hellend uitstrekt in een richting weg van de tweede neerwaartse flank, bij voorkeur zodanig dat een hoek is ingesloten met de normaal loodrecht op het door de tegel gedefinieerde vlak waarbij genoemde hoek gelegen is tussen de 0 en 60 graden, in het bijzonder tussen 0 en 45 graden.

42. Tegelsysteem volgens één van de voorgaande conclusies, waarbij ten minste een deel van de proximale zijde van de zijwaartse tong van het eerste koppelprofiel, gericht naar de eerste neerwaartse uitsparing, zich neerwaarts hellend uitstrekt in een richting weg van de eerste neerwaartse flank, bij voorkeur zodanig dat een hoek is ingesloten met de normaal loodrecht op het door de tegel gedefinieerde vlak waarbij genoemde hoek gelegen is tussen de 0 en 60 graden, in het bijzonder tussen 0 en 45 graden.

43. Tegelsysteem volgens één van de voorgaande conclusies, waarbij ten minste een deel van de proximale zijde van de neerwaartse tong van het tweede koppelprofiel, gericht naar de tweede neerwaartse uitsparing, zich neerwaarts hellend uitstrekt in een richting weg van de tweede neerwaartse flank, bij voorkeur zodanig dat een hoek is ingesloten met de normaal loodrecht op het door de tegel gedefinieerde vlak waarbij genoemde hoek gelegen is tussen de 0 en 60 graden, in het bijzonder tussen 0 en 45 graden.

44. Tegelsysteem volgens één van de voorgaande conclusies, waarbij ten minste een deel van de proximale zijde van de zijwaartse tong van het eerste koppelprofiel, gericht naar de eerste neerwaartse uitsparing, zich neerwaarts hellend uitstrekt in een richting naar de eerste neerwaartse flank, bij voorkeur zodanig dat een hoek is ingesloten met de normaal loodrecht op het door de tegel gedefinieerde vlak waarbij genoemde hoek gelegen is tussen de 0 en 60 graden, in het bijzonder tussen 0 en 45 graden.

45. Tegelsysteem volgens één van de voorgaande conclusies, waarbij een eerste overgangszone tussen de proximale zijde van de zijwaartse tong van het eerste

koppelprofiel en een onderkant van de zijwaartse tong van het eerste koppelprofiel gebogen is

46. Tegelsysteem volgens één van de voorgaande conclusies, waarbij een tweede overgangszonde tussen de proximale zijde van de neerwaartse tong van het tweede koppelprofiel en een onderkant van de neerwaartse tong van het tweede koppelprofiel gebogen is.

47. Tegelsysteem volgens één van de voorgaande conclusies, waarbij een derde overgangszone tussen de proximale zijde van het opwaartse vergrendelingselement van het derde koppelprofiel en een bovenkant van het opwaartse vergrendelingselement van het derde koppelprofiel gebogen is.

48. Tegelsysteem volgens één van de voorgaande conclusies, waarbij een lagere zijde van de onderlip van het derde koppelprofiel, zich hellend in een opwaartse richting in een richting naar een distaal einde van de bovenlip uitstrekt, waarbij een uitsparing aanwezig is onder genoemde hellende lagere zijde van de onderlip, welke buiging van de onderlip in een neerwaartse richting toestaat, in het bijzonder tijdens koppeling.

49. Tegelsysteem volgens één van de voorgaande conclusies, waarbij het eerste koppelprofiel en het derde koppelprofiel zodanig zijn ingericht dat in gekoppelde toestand het eerste koppelprofiel door het derde koppelprofiel wordt geklemd.

50. Tegelsysteem volgens één van de voorgaande conclusies, waarbij het tweede koppelprofiel en het derde koppelprofiel zodanig zijn ingericht dat in gekoppelde toestand het tweede koppelprofiel door het derde koppelprofiel wordt geklemd.

51. Tegelsysteem volgens één van de voorgaande conclusies, waarbij het eerste koppelprofiel en het derde koppelprofiel zodanig zijn ingericht dat een gekoppelde toestand in hoofdzaak vrij is van voorspanning tussen het eerste koppelprofiel en het derde koppelprofiel.

52. Tegelsysteem volgens één van de voorgaande conclusies, waarbij het tweede koppelprofiel en het derde koppelprofiel zodanig zijn ingericht dat een gekoppelde toestand in hoofdzaak vrij is van voorspanning tussen het tweede koppelprofiel en het derde koppelprofiel.

53. Tegelsysteem volgens één van de voorgaande conclusies, waarbij het eerste koppelprofiel en het derde koppelprofiel zodanig zijn ingericht dat in gekoppelde toestand meerdere, bij voorkeur ten minste drie, van elkaar gelegen contactzones aanwezig zijn, waarbij tussen elk paar aangrenzende contactzones een ruimte overblijft.

54. Tegelsysteem volgens één van de voorgaande conclusies, waarbij het tweede koppelprofiel en het derde koppelprofiel zodanig zijn ingericht dat in gekoppelde toestand meerdere, bij voorkeur ten minste drie, van elkaar gelegen contactzones aanwezig zijn, waarbij tussen elk paar aangrenzende contactzones een ruimte overblijft.

55. Tegelsysteem volgens één van de voorgaande conclusies, waarbij een distale zijde van de neerwaartse tong, afgekeerd van de tweede neerwaartse uitsparing, ten minste een verticaal bovenwanddeel omvat aangrenzend aan de bovenzijde van de tegel, en, aangrenzend aan en gepositioneerd onder genoemd verticaal wanddeel, een afgeschuind wanddeel dat naar binnen toe schuin afsteekt naar een afgeschuind en/of gebogen onderwanddeel van genoemde distale zijde van de neerwaartse tong.

56. Tegelsysteem volgens één van de voorgaande conclusies, waarbij in een gekoppelde toestand van tegels, de eerste neerwaartse flank van het eerste koppelprofiel en een distale zijde van het opwaartse vergrendelingselement en/of onderlip van het derde koppelprofiel, gericht naar de eerste neerwaartse flank, op afstand van elkaar zijn gepositioneerd.

57. Tegelsysteem volgens één van de voorgaande conclusies, waarbij in een gekoppelde toestand van tegels, de tweede neerwaartse flank van het tweede koppelprofiel en een distale zijde van het opwaartse vergrendelingselement en/of

onderlip van het derde koppelprofiel, gericht naar de tweede neerwaartse flank, ten minste gedeeltelijk op afstand van elkaar zijn gelegen.

58. Tegelsysteem volgens één van de voorgaande conclusies, waarbij ten minste een deel van, en bij voorkeur de gehele, bovenzijde van het opwaartse vergrendelingselement zich neerwaarts hellend uitstrekt in een richting weg van de bovenlip van het derde koppelprofiel.

59. Tegelsysteem volgens één van de voorgaande conclusies, waarbij ten minste een deel van, en bij voorkeur de gehele, bovenzijde van de eerste neerwaartse uitsparing zich neerwaarts hellend uitstrekt richting de eerste neerwaartse flank.

60. Tegelsysteem volgens conclusie 58 en 59, waarbij beide hellingen onderling een hoek insluiten tussen de 0 en 5 graden.

61. Tegelsysteem volgens één van de voorgaande conclusies, waarbij ten minste een deel van, en bij voorkeur de gehele, bovenzijde van de tweede neerwaartse uitsparing zich neerwaarts hellend uitstrekt richting de tweede neerwaartse flank.

62. Tegelsysteem volgens conclusie 58 en 61 waarbij beide hellingen onderling een hoek insluiten tussen de 0 en 5 graden.

63. Tegelsysteem volgens één van de voorgaande conclusies, waarbij, in gekoppelde toestand van twee tegels, de bovenzijde van het opwaartse vergrendelingselement van het derde koppelprofiel op afstand van de bovenzijde van de eerste neerwaartse uitsparing van het eerste koppelprofiel is gepositioneerd, en waarbij, in gekoppelde toestand van twee tegels, de bovenzijde van het opwaartse vergrendelingselement van het derde koppelprofiel op afstand van de bovenzijde van de tweede neerwaartse uitsparing van het tweede koppelprofiel is gepositioneerd.

64. Tegelsysteem volgens één van de voorgaande conclusies, waarbij het derde vergrendelingselement een vult omvat met een hellend, in hoofzaak vlak derde vergrendelingsoppervlak, en waarbij het tweede vergrendelingselement een uitsparing omvat die deels is gedefinieerd door een hellend, in hoofdzaak vlak

tweede vergrendelingsoppervlak, waarbij genoemde uitsparing is ingericht voor het accommoderen van ten minste een deel van genoemde bult, en waarbij genoemd tweede vergrendelingsoppervlak is ingericht om zich te keren naar, en bij voorkeur samenwerken met, genoemd derde vergrendelingsoppervlak.

65. Tegelsysteem volgens conclusie 65, waarbij elke van het tweede vergrendelingsoppervlak en derde vergrendelingsoppervlak een hoek insluiten met een door de tegel gedefinieerd vlak van 30° tot 40°, bij voorkeur tussen 33° tot 38°, nog meer bij voorkeur 35° tot 37°, in het bijzonder ongeveer 36°.

66. Tegelsysteem volgens één van de voorgaande conclusies, waarbij elke tegel ten minste twee derde koppelprofielen omvat.

67. Tegelsysteem volgens één van de voorgaande conclusies, waarbij een bovenzijde van het opwaartse vergrendelingselement op een lager niveau is gepositioneerd dan de bovenlip van het derde koppelprofiel.

68. Tegelsysteem volgens één van de voorgaande conclusies, waarbij de eerste zijde en/of de tweede zijde en/of de derde zijde voorzien is van een afschuining, zoals een schuine kant of een voeg, aan of nabij de bovenzijde van de tegels.

69. Tegelsysteem volgens één van de voorgaande conclusies, waarbij het systeem twee verschillende type tegels (respectievelijk A en B) omvat, en waarbij de koppelprofielen van één type tegel langs in spiegel-omgekeerde wijze zijn gerangschikt ten opzichte van de overeenkomstige koppelprofielen van het andere type tegel, waarbij bij voorkeur ten minste een tegel (A) een configuratie heeft, waarbij de zijden zijn gerangschikt, gezien vanuit een bovenaanzicht met de klok mee, in de volgorde: een eerste zijde, een derde zijde, nog een derde zijde, en een tweede zijde, en waarbij bij voorkeur ten minste een tegel (B) een configuratie heeft, waarbij de zijden zijn gerangschikt, gezien vanuit een bovenaanzicht met de klok mee, in de volgorde: een eerste zijde, een tweede zijde, een derde zijde en nog een derde zijde.

70. Tegelsysteem volgens één van de voorgaande conclusies, waarbij de lengte van de tegenoverliggende zijden van een tegen in hoofdzaak identiek is.

71. Tegelsysteem volgens één van de voorgaande conclusies, waarbij elke tegel vrij is van een ander koppelprofiel dan ten minste een eerste koppelprofiel, ten minste een tweede koppelprofiel en ten minste een, bij voorkeur twee, derde koppelprofielen.

72. Tegelsysteem volgens één van de voorgaande conclusies, waarbij meerdere tegels een vierkante en/of rechthoekige vorm hebben.

73. Tegelsysteem volgens één van de voorgaande conclusies, waarbij meerdere tegels een parallellogrammische vorm hebben, waarbij genoemde tegels zijn ingericht om in een visgraatpatroon te worden samengevoegd, waarbij twee paren van aangrenzende tegels een scherpe hoek insluiten, en waarbij twee paren van andere aangrenzende tegels een stompe hoek insluiten.

74. Tegelsysteem volgens conclusie 73, waarbij de scherpe hoek is gelegen tussen 30 en 60 graden, en bij voorkeur hoofdzakelijk 45 graden is.

75. Tegelsysteem volgens conclusie 73 of 74, waarbij de stompe hoek is gelegen tussen de 120 en 150 graden, en bij voorkeur hoofdzakelijk 35 graden is.

76. Tegelsysteem volgens één van de voorgaande conclusies, waarbij ten minste één tegel een kernlaag omvat en ten minste één bovenste substraat dat is bevestigd aan een bovenzijde van genoemde kernlaag, waarbij genoemde bovenste substraat bij voorkeur een decoratieve laag omvat.

77. Tegelsysteem volgens conclusie 76, waarbij ten minste een bovenste substraat omvat:

- een decoratieve laag, en
- ten minste een ten minste gedeeltelijke transparante of doorzichtige slijtlaag die voornoemde decoratieve laag bedekt, waarbij een bovenoppervlak van voornoemde slijtlaag het bovenoppervlak van voornoemde tegel is,
- en, optioneel, een transparante afwerklaag die is gelegen tussen de decoratieve laag en de slijtlaag.

78. Tegelsysteem volgens één van de conclusies 76-77, waarbij de ten minste éne bovenste substraat ten minste gedeeltelijk is vervaardigd uit ten minste één materiaal gekozen uit de groep bestaande uit: metalen, legeringen, natuurlijk steen, marmer, graniet, leisteen, glas, keramiek, macromoleculaire materialen zoals vinylmonomeer-copolymeren en/of homopolymeren; condensatiepolymeren zoals polyesters, polyamiden, polyimiden, epoxyharsen, fenol-formaldehyde-harsen, ureum-formaldehyde-harsen, natuurlijke macromoleculaire materialen of gemodificeerde derivaten daarvan, zoals plantaardige vezels, dierlijke vezels, minerale vezels, keramische vezels en koolstofvezels.

79. Tegelsysteem volgens conclusie 78, waarbij de vinylomonomeer-copolymeren en/of -homopolymeren worden gekozen uit de groep bestaande uit polyethyleen, polyvinylchloride, polyurethaan, polystyreen, polymethacrylaten, polyacrylaten, polyacrylamiden, ABS, (acrylonitril-butadieen-styreen) copolymeren, polypropyleen, ethyleen-propyleen-copolymeren, polyvinylideenchloride, polytetrafluorethyleen, polyvinylideenfluoride, hexafluorpropeen en styreen-maleïnezuuranhydridecopolymeren.

80. Tegelsysteem volgens conclusie 76-79, waarbij ten minste één bovenste substraat bevestigd is aan de bovenzijde van de kernlaag door middel van een kleefmiddel en/of door middel van samensmelten.

81. Tegelsysteem volgens één van de voorgaande conclusies, waarbij elke tegel ten minste één kernlaag omvat.

82. Tegelsysteem volgens één van de voorgaande conclusies, waarbij ten minste een deel van de kernlaag geschuimd is.

83. Tegelsysteem volgens conclusie 82, de geschuimde kernlaag is ten minste gedeeltelijk van polyvinylchloride (PVC) en/of polyurethaan (PU).

84. Tegelsysteem volgens één van de conclusies 81-83, waarbij de kernlaag ten minste één polymeer omvat gekozen uit de groep bestaande uit: : ethyleenvinylacetaat (EVA), polyurethaan (PU), polyethyleen (PE), polypropyleen (PP), polystyreen (PS), polyvinylchloride (PVC), Polyisocyanuraat (PIR), of mengsels daarvan.

85. Tegelsysteem volgens één van de conclusies 81-84, waarbij de kernlaag ten minste één composietmateriaal omvat van ten minste een polymerisch materiaal en ten minste één non-polymerisch materiaal

86. Tegelsystem volgens één van de conclusies 81-85, waarbij elke tegel ten minste één ruglaag omvat die is vastgemaakt aan een onderzijde van de kernlaag, waarbij genoemde ten minste éne ruglaag ten minste gedeeltelijk vervaardigd is van flexibel materiaal, bij voorkeur een elastomeer of kurk.

87. Tegelsysteem volgens één van de voorgaande conclusies, waarbij ten minste een deel van het eerste koppelprofiel en/of ten minste een deel van het tweede koppelprofiel en/of ten minste een deel van het derde koppelprofiel van elke tegel integraal is verbonden met de kernlaag.

88. Tegelsysteem volgens één van de voorgaande conclusies, waarbij het eerste koppelprofiel en/of het tweede koppelprofiel en/of het derde koppelprofiel tijdens het koppelen en ontkoppelen van de tegels deformatie toestaat.

89. Tegelsysteem volgens één van de voorgaande conclusies, waarbij ten minste een aantal van de tegels identiek is.

90. Tegelsysteem volgens één van de voorgaande conclusies, waarbij ten minste een aantal tegels een andere grootte en/of andere vorm heeft.

91. Tegelsysteem volgens één van de voorgaande conclusies, waarbij het tegelsysteem verschillende type tegels (respectievelijk A en B) omvat, waarbij de grootte van een eerste type tegel (A) verschilt van de grootte van de tweede type tegel (B).

92. Tegelsysteem volgens conclusie 90 of 91, waarbij onderscheidende visuele markeringen zijn aangebracht op verschillende soorten tegels, bij voorkeur voor installatiedoeleinden.

93. Tegelsysteem volgens conclusie 92, waarbij onderscheidende visuele markeringen zijn aangebracht op de bovenzijde van het derde koppelprofiel van elke tegel, bij voorkeur de bovenzijde van het opwaartse vergrendelingselement van het derde koppelprofiel van elke tegel.

94. Tegelbedekking, in het bijzonder een vloerbedekking, plafondbedekking, of muurbedekking, bestaande uit onderling gekoppelde tegels van het tegelsysteem volgens één van de conclusies 1-93.

95. Tegels voor gebruik in een multifunctioneel tegelsysteem volgens één van de conclusies 1-93.

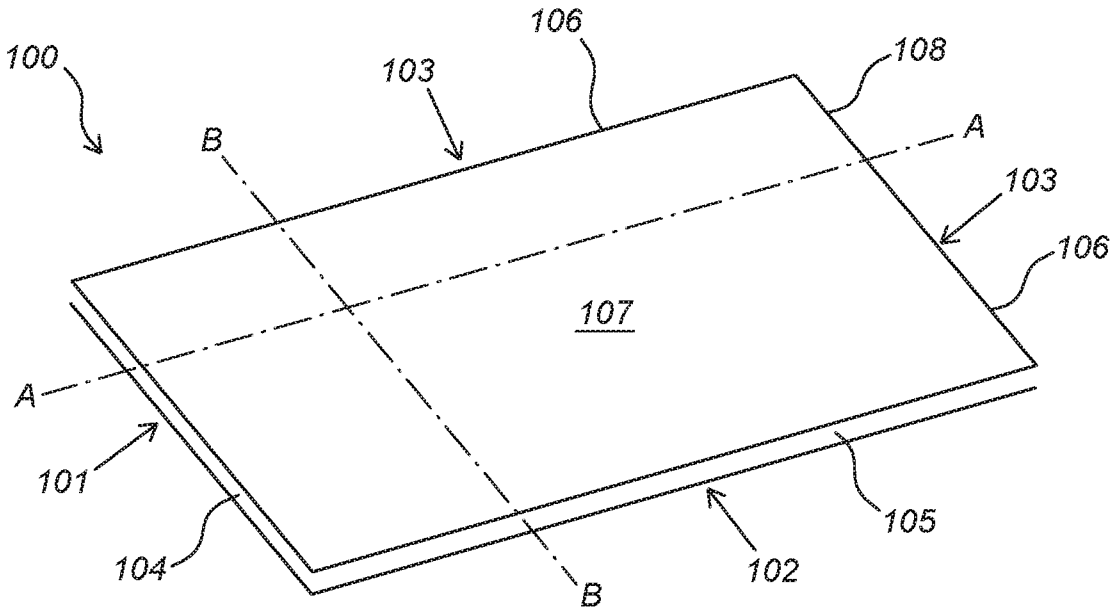

Fig. 1a

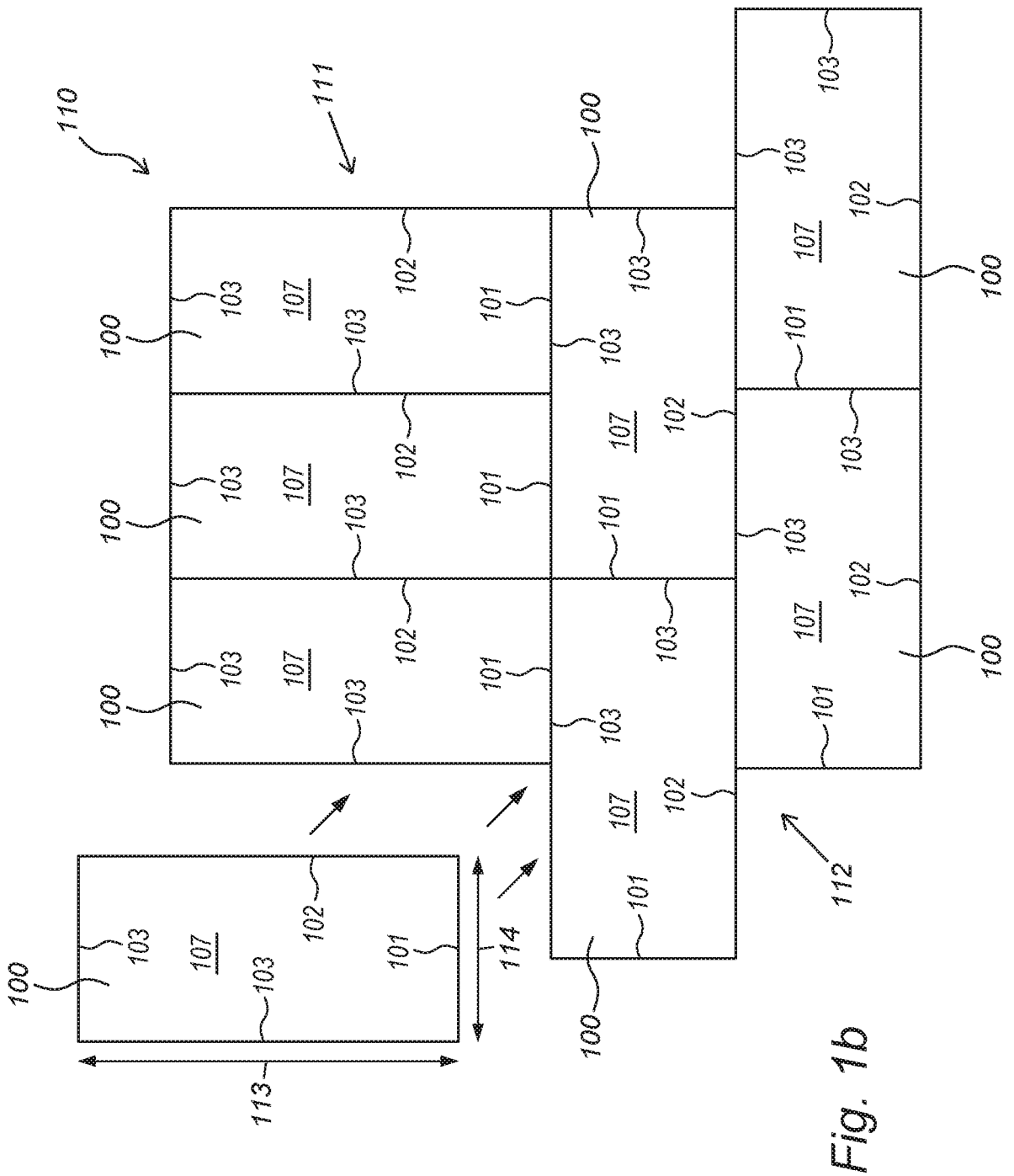

Fig. 1b

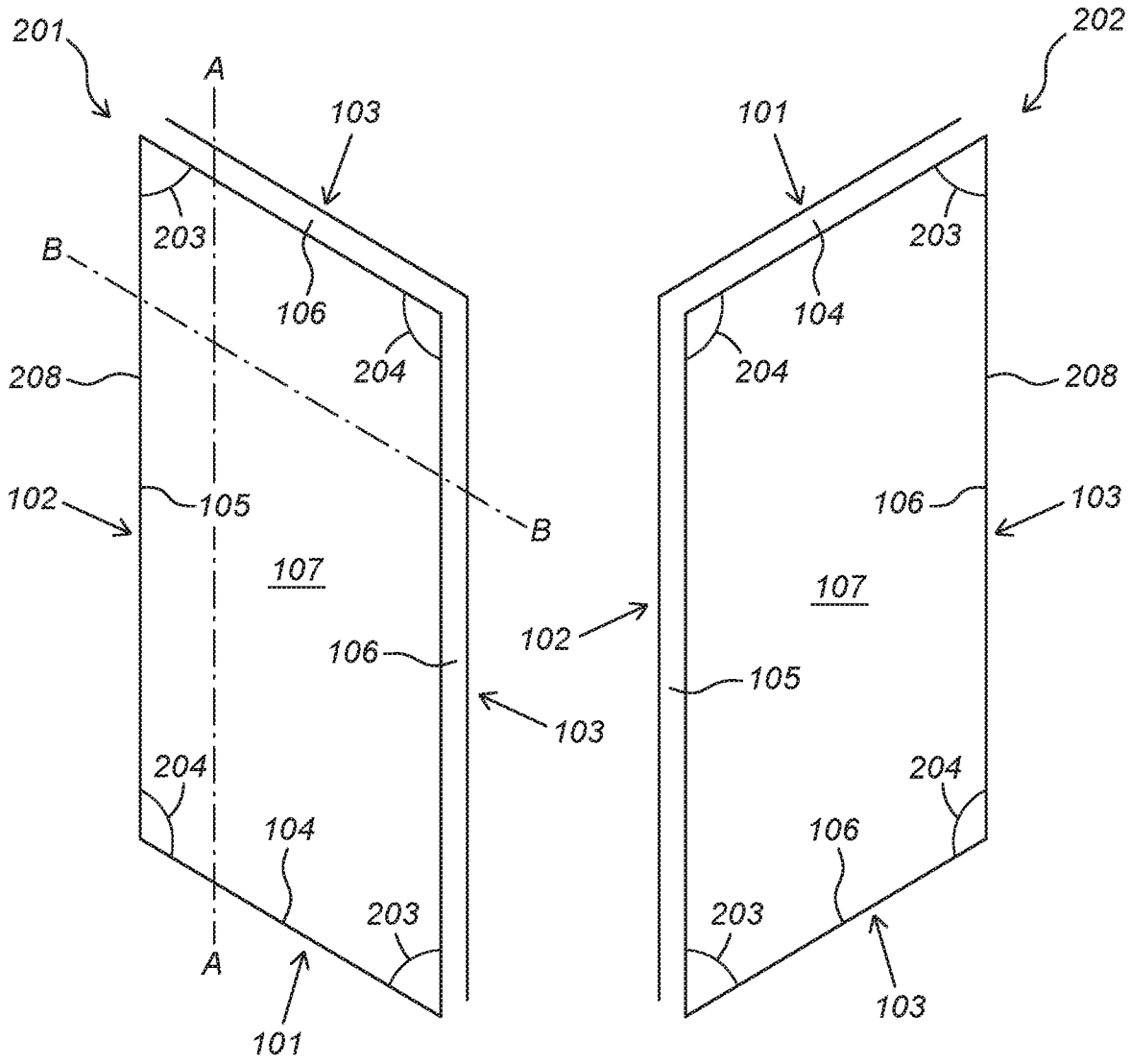
201
A
103
203
B
106
204
208
102
105
107
106
103
204
104
203
A
101
202
101
203
104
204
208
106
103
107
102
105
204
106
203
103

Fig. 2a

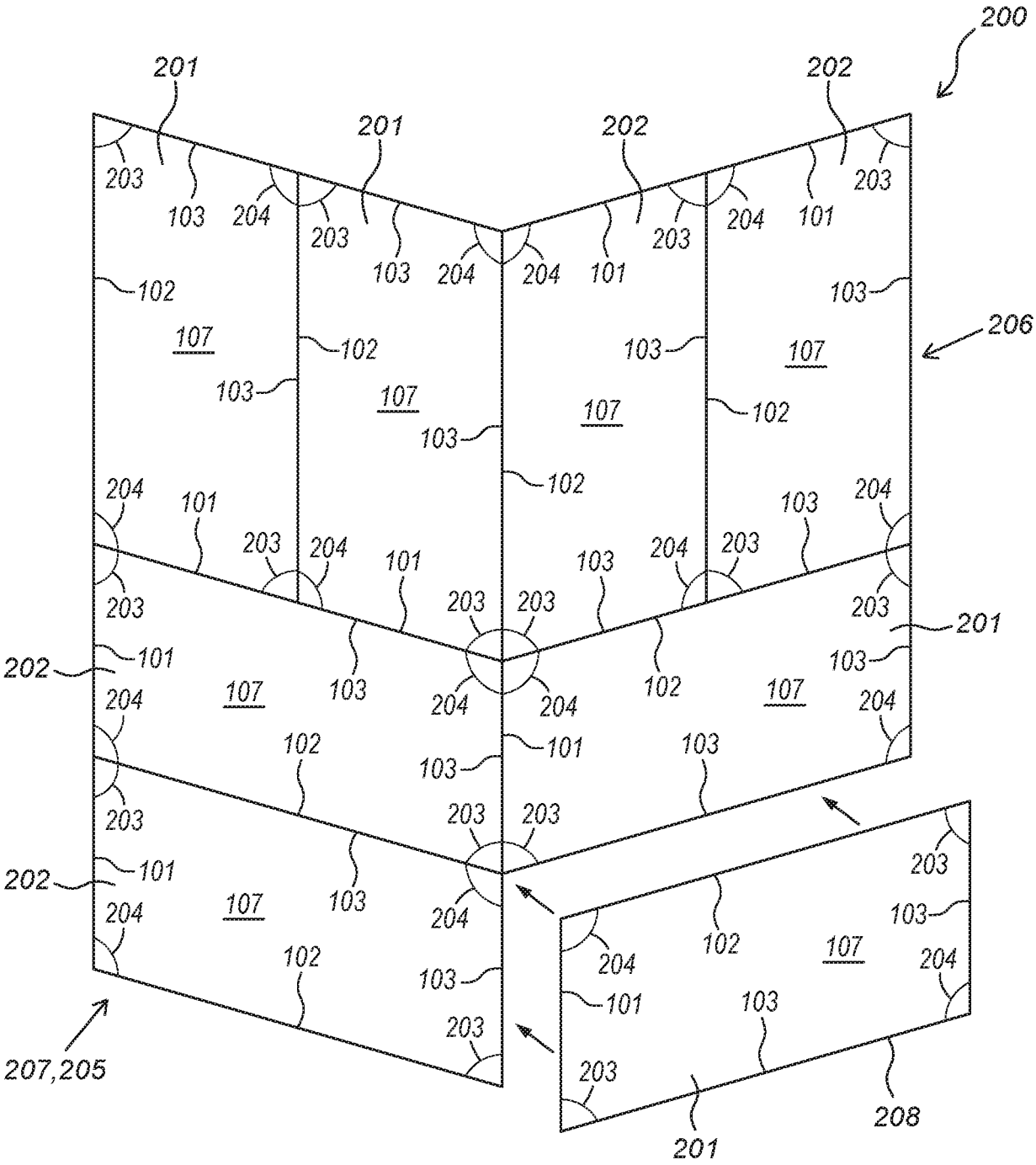

Fig. 2b

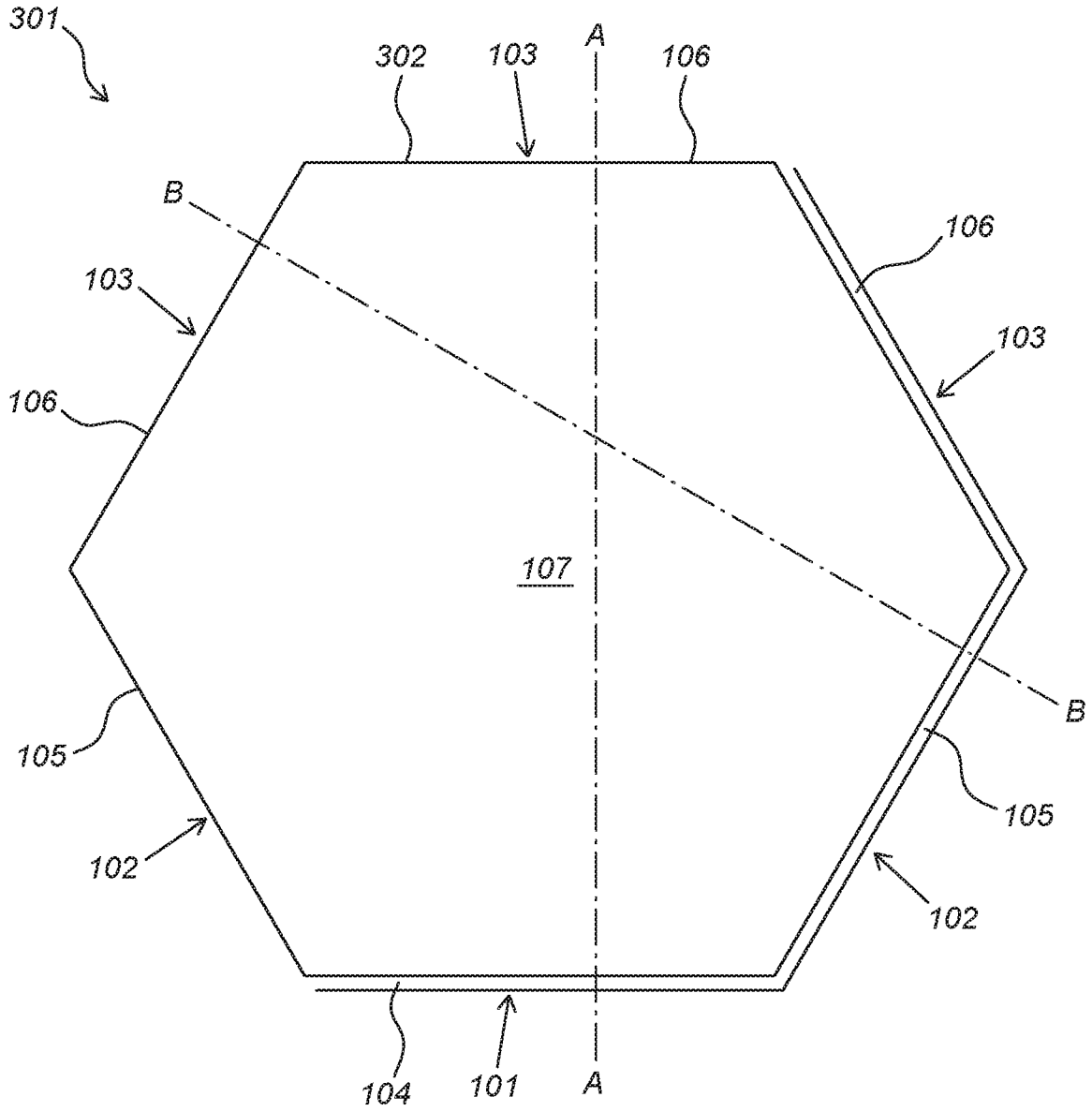

Fig. 3a

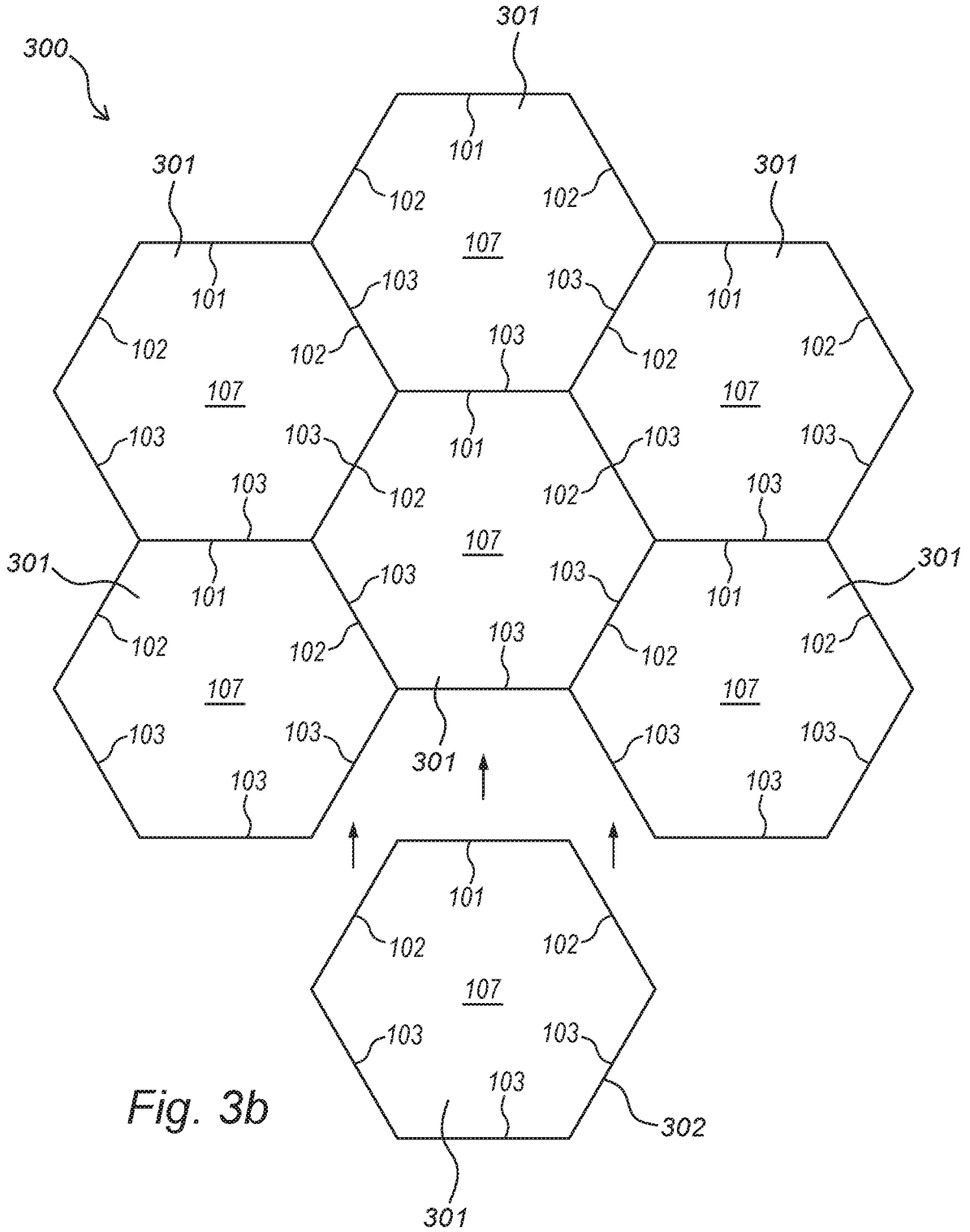

Fig. 3b

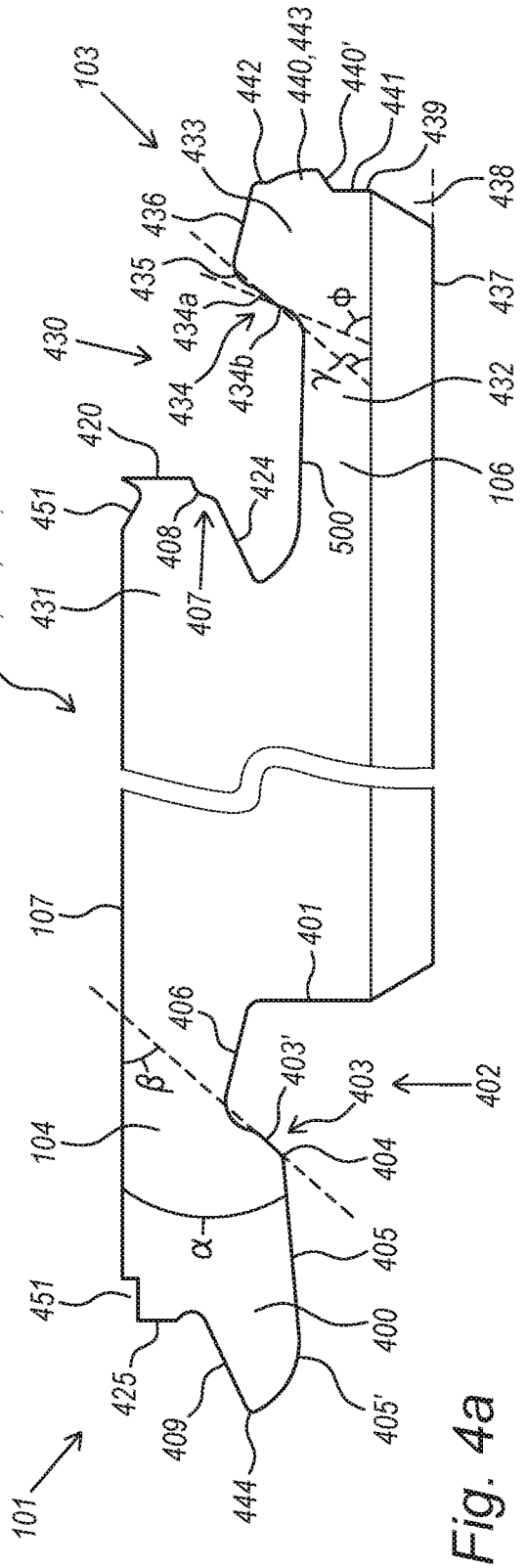
101
100,201,202,301
102
103
104
105
106
107
400
401
402
403
403'
404
405
405'
406
407
408
409
410
411
412
413
413'
414
414'
415
416
417
418
419
420
421
422,423
422'
424
425
430
431
432
433
434
434a
434b
435
436
437
438
439
440,443
440'
441
442
444
450
451
500
α
β
γ
δ
φ
D

Fig. 4a

Fig. 4b

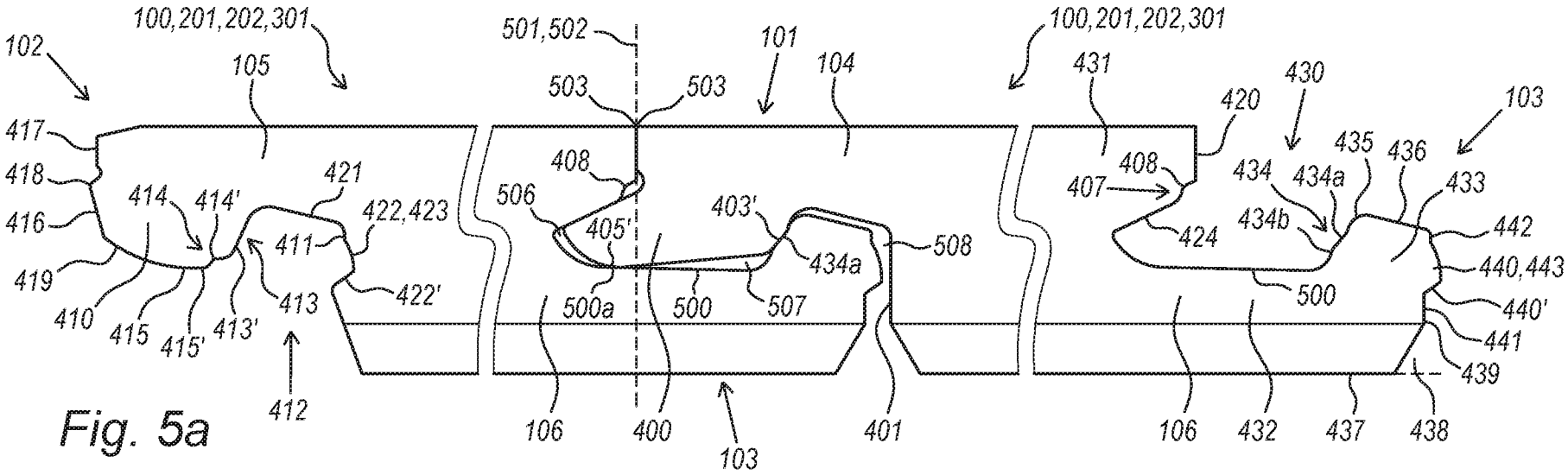
102
100,201,202,301
105
501,502
503
503
101
104
100,201,202,301
431
420
430
103
417
418
416
419
410
414
414'
415
415'
413'
413
421
422,423
411
422'
412
408
506
405'
403'
434a
508
500a
500
507
407
408
424
434
434a
434b
435
436
433
442
440,443
500
440'
441
439
106
400
103
401
106
432
437
438

Fig. 5a

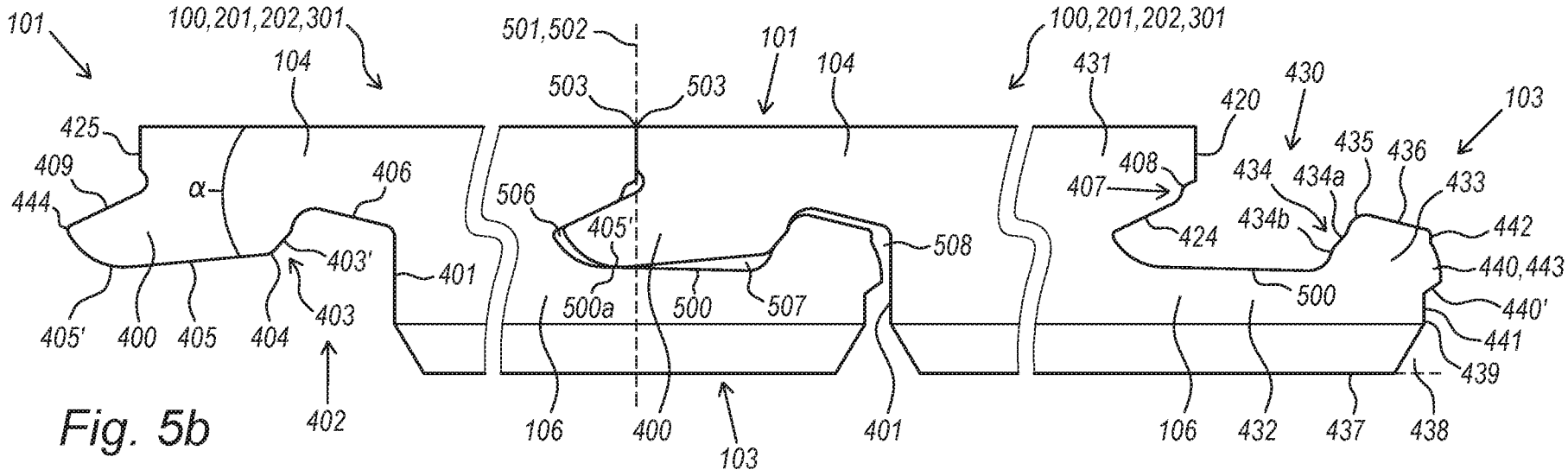
101
100,201,202,301
104
501,502
503
503
101
104
100,201,202,301
431
420
430
103
425
409
444
405'
400
405
404
α
406
403'
403
401
402
506
405'
508
500a
500
507
407
408
424
434
434a
434b
435
436
433
442
440,443
500
440'
441
439
106
400
103
401
106
432
437
438

Fig. 5b

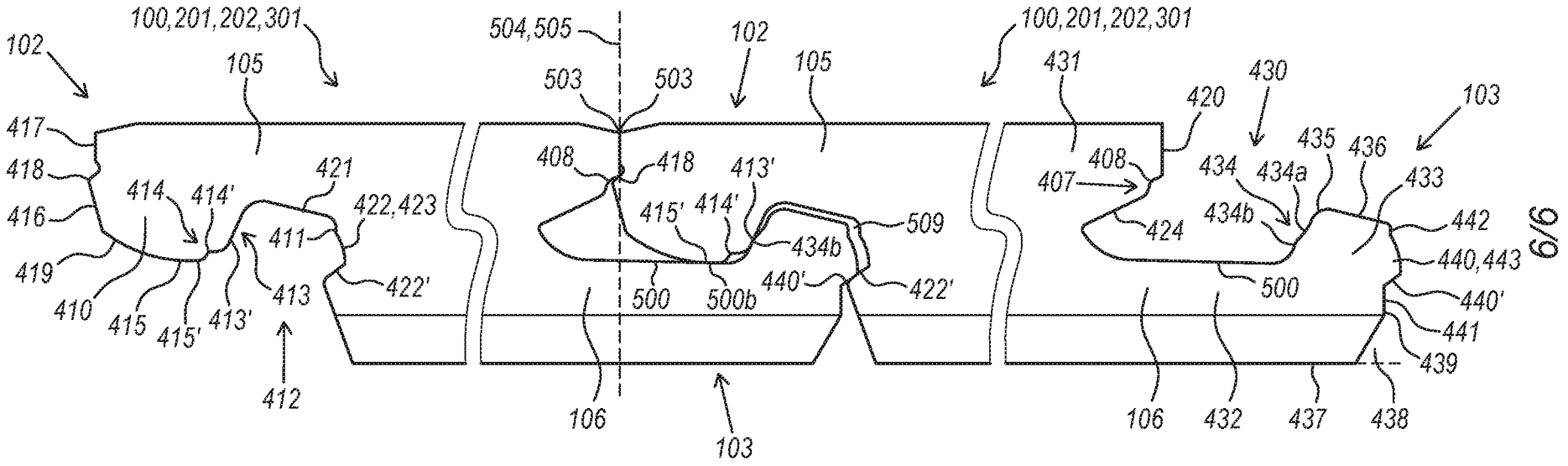
100,201,202,301
102
105
504,505
503
503
102
105
100,201,202,301
431
420
430
103
417
418
416
419
410
415
415'
413'
414
414'
421
422,423
411
413
422'
412
408
418
413'
415'
414'
509
434b
500
500b
440'
422'
106
103
407
408
424
434
434a
435
436
433
434b
442
440,443
500
440'
441
439
106
432
437
438

Fig. 5c

SAMENWERKINGSVERDRAG (PCT)

RAPPORT BETREFFENDE NIEUWHEIDSONDERZOEK VAN INTERNATIONAAL TYPE

IDENTIFICATIE VAN DE NATIONALE AANVRAGE	KENMERK VAN DE AANVRAGER OF VAN DE GEMACHTIGDE
Nederlands aanvraag nr. **2028776**	Indieningsdatum **19-07-2021**
	Ingeroepen voorrangsdatum
Aanvrager (Naam) **I4F LICENSING NV**	
Datum van het verzoek voor een onderzoek van internationaal type **04-12-2021**	Door de Instantie voor Internationaal Onderzoek aan het verzoek voor een onderzoek van internationaal type toegekend nr. **SN80158**

I. CLASSIFICATIE VAN HET ONDERWERP (bij toepassing van verschillende classificaties, alle classificatiesymbolen opgeven)

Volgens de internationale classificatie (IPC)

Zie onderzoeksrapport

II. ONDERZOCHTE GEBIEDEN VAN DE TECHNIEK

Onderzochte minimumdocumentatie

Classificatiesysteem	Classificatiesymbolen
IPC	**Zie onderzoeksrapport**

Onderzochte andere documentatie dan de minimum documentatie, voor zover dergelijke documenten in de onderzochte gebieden zijn opgenomen

III.	☐	**GEEN ONDERZOEK MOGELIJK VOOR BEPAALDE CONCLUSIES**	(opmerkingen op aanvullingsblad)
IV.	☐	**GEBREK AAN EENHEID VAN UITVINDING**	(opmerkingen op aanvullingsblad)

ONDERZOEKSRAPPORT BETREFFENDE HET RESULTAAT VAN HET ONDERZOEK NAAR DE STAND VAN DE TECHNIEK VAN HET INTERNATIONALE TYPE

Nummer van het verzoek om een onderzoek naar de stand van de techniek
NL 2028776

A. CLASSIFICATIE VAN HET ONDERWERP
INV. E04F15/02 E04F15/10
ADD.

Volgens de Internationale Classificatie van octrooien (IPC) of zowel volgens de nationale classificatie als volgens de IPC.

B. ONDERZOCHTE GEBIEDEN VAN DE TECHNIEK

Onderzochte miminum documentatie (classificatie gevolgd door classificatiesymbolen)
E04F

Onderzochte andere documentatie dan de mimimum documentatie, voor dergelijke documenten, voor zover dergelijke documenten in de onderzochte gebieden zijn opgenomen

Tijdens het onderzoek geraadpleegde elektronische gegevensbestanden (naam van de gegevensbestanden en, waar uitvoerbaar, gebruikte trefwoorden)
EPO-Internal, WPI Data

C. VAN BELANG GEACHTE DOCUMENTEN

Categorie °	Geciteerde documenten, eventueel met aanduiding van speciaal van belang zijnde passages	Van belang voor conclusie nr.
X	WO 2019/138365 A1 (FLOORING IND LTD SARL [LU]) 18 juli 2019 (2019-07-18)	1-3,5,8, 9,12-15, 21-24, 28-39, 45, 47-54, 56,58, 59,61, 63-67, 69-72, 76-89, 94,95
Y	* figuren 1,17-22 * * bladzijde 1, regel 4 - regel 5 * * bladzijde 8, regel 23 - regel 24 * * bladzijde 9, regel 12 - regel 23 * * bladzijde 9, regel 35 * * bladzijde 10, regel 35 - regel 36 * * bladzijde 11, regel 7 - regel 18 * -/--	4,6,7, 10,11, 16-20, 25-27, 40-44, 46,55, 57,60,

[X] Verdere documenten worden vermeld in het vervolg van vak C.

[X] Leden van dezelfde octrooifamilie zijn vermeld in een bijlage

° Speciale categorieën van aangehaalde documenten

"A" niet tot de categorie X of Y behorende literatuur die de stand van de techniek beschrijft

"D" in de octrooiaanvrage vermeld

"E" eerdere octrooi(aanvrage), gepubliceerd op of na de indieningsdatum, waarin dezelfde uitvinding wordt beschreven

"L" om andere redenen vermelde literatuur

"O" niet-schriftelijke stand van de techniek

"P" tussen de voorrangsdatum en de indieningsdatum gepubliceerde literatuur

"T" na de indieningsdatum of de voorrangsdatum gepubliceerde literatuur die niet bezwarend is voor de octrooiaanvrage, maar wordt vermeld ter verheldering van de theorie of het principe dat ten grondslag ligt aan de uitvinding

"X" de conclusie wordt als niet nieuw of niet inventief beschouwd ten opzichte van deze literatuur

"Y" de conclusie wordt als niet inventief beschouwd ten opzichte van de combinatie van deze literatuur met andere geciteerde literatuur van dezelfde categorie, waarbij de combinatie voor de vakman voor de hand liggend wordt geacht

"&" lid van dezelfde octrooifamilie of overeenkomstige octrooipublicatie

Datum waarop het onderzoek naar de stand van de techniek van internationaal type werd voltooid	Verzenddatum van het rapport van het onderzoek naar de stand van de techniek van internationaal type
9 maart 2022	

Naam en adres van de instantie	De bevoegde ambtenaar
European Patent Office, P.B. 5818 Patentlaan 2 NL - 2280 HV Rijswijk Tel. (+31-70) 340-2040, Fax: (+31-70) 340-3016	**Estorgues, Marlène**

2

ONDERZOEKSRAPPORT BETREFFENDE HET RESULTAAT VAN HET ONDERZOEK NAAR DE STAND VAN DE TECHNIEK VAN HET INTERNATIONALE TYPE

Nummer van het verzoek om een onderzoek naar de stand van de techniek
NL 2028776

C.(Vervolg). VAN BELANG GEACHTE DOCUMENTEN

Categorie °	Geciteerde documenten, eventueel met aanduiding van speciaal van belang zijnde passages	Van belang voor conclusie nr.
	* bladzijde 12, regel 5 - regel 7 * * bladzijde 12, regel 29 - regel 33 * * bladzijde 15, regel 5 * * bladzijde 16, regel 25 - regel 34 * * bladzijde 17, regel 5 - regel 10 * * bladzijde 20, regel 10 - regel 12 * * bladzijde 23, regel 11 - regel 12 * -----	62,68, 73-75, 90-93
Y	US 2019/211569 A1 (BOO CHRISTIAN [SE] ET AL) 11 juli 2019 (2019-07-11) * figuren 1A-1C, 2A-2C * * alinea [0043] * * alinea [0060] * * alinea [0047] * * alinea [0081] * -----	4,10,11, 27,46
Y	DE 20 2007 013059 U1 (FLORING IND LTD [IE]) 15 november 2007 (2007-11-15) * figuren 21-24 * * alinea [0116] - alinea [0118] * -----	6,7
Y	US 2020/131784 A1 (BOUCKÉ EDDY ALBERIC [BE]) 30 april 2020 (2020-04-30) * figuren 7a-7c * * alinea [0070] * * alinea [0237] * * alinea [0248] * -----	16-20, 25,26, 40-44, 55,57, 60,62, 68, 73-75, 90-93

ONDERZOEKSRAPPORT BETREFFENDE HET RESULTAAT VAN HET ONDERZOEK NAAR DE STAND VAN DE TECHNIEK VAN HET INTERNATIONALE TYPE

Informatie over leden van dezelfde octrooifamilie

Nummer van het verzoek om een onderzoek naar de stand van de techniek

NL 2028776

In het rapport genoemd octrooigeschrift	Datum van publicatie	Overeenkomend(e) geschrift(en)	Datum van publicatie
WO 2019138365 A1	18-07-2019	EP 3737805 A1	18-11-2020
		US 2020340254 A1	29-10-2020
		US 2022064964 A1	03-03-2022
		WO 2019138365 A1	18-07-2019
US 2019211569 A1	11-07-2019	AU 2018400651 A1	02-07-2020
		BR 112020013765 A2	01-12-2020
		CA 3086053 A1	18-07-2019
		CN 111556917 A	18-08-2020
		EA 202091463 A1	30-11-2020
		EP 3737802 A1	18-11-2020
		JP 2021509456 A	25-03-2021
		KR 20200106899 A	15-09-2020
		PH 12020550999 A1	26-04-2021
		US 2019211569 A1	11-07-2019
		US 2020407981 A1	31-12-2020
		WO 2019139520 A1	18-07-2019
DE 202007013059 U1	15-11-2007	BE 1017403 A5	05-08-2008
		CN 101563511 A	21-10-2009
		DE 202007013059 U1	15-11-2007
		EP 2099987 A2	16-09-2009
		RU 2009128081 A	27-01-2011
		US 2009320402 A1	31-12-2009
		US 2014318070 A1	30-10-2014
		US 2017089078 A1	30-03-2017
		WO 2008078183 A2	03-07-2008
US 2020131784 A1	30-04-2020	AU 2019369000 A1	27-05-2021
		BR 112021007783 A2	27-07-2021
		CA 3116617 A1	30-04-2020
		CN 112912576 A	04-06-2021
		EA 202191089 A1	12-07-2021
		EP 3870774 A1	01-09-2021
		EP 3907347 A1	10-11-2021
		KR 20210086666 A	08-07-2021
		TW 202024447 A	01-07-2020
		US 2020131784 A1	30-04-2020
		US 2021032875 A1	04-02-2021
		US 2021372138 A1	02-12-2021
		WO 2020083614 A1	30-04-2020

WRITTEN OPINION

File No.	Filing date *(day/month/year)*	Priority date *(day/month/year)*	Application No.
SN80158	19.07.2021		NL2028776

International Patent Classification (IPC)
INV. E04F15/02 E04F15/10

Applicant
I4F LICENSING NV

This opinion contains indications relating to the following items:

- ☒ Box No. I Basis of the opinion
- ☐ Box No. II Priority
- ☐ Box No. III Non-establishment of opinion with regard to novelty, inventive step and industrial applicability
- ☐ Box No. IV Lack of unity of invention
- ☒ Box No. V Reasoned statement with regard to novelty, inventive step or industrial applicability; citations and explanations supporting such statement
- ☐ Box No. VI Certain documents cited
- ☒ Box No. VII Certain defects in the application
- ☒ Box No. VIII Certain observations on the application

	Examiner
	Estorgues, Marlène

Application number

WRITTEN OPINION

NL2028776

Box No. I Basis of this opinion

1. This opinion has been established on the basis of the latest set of claims filed before the start of the search.

2. With regard to any **nucleotide and/or amino acid sequence** disclosed in the application and necessary to the claimed invention, this opinion has been established on the basis of:

   a. type of material:

   ☐ a sequence listing

   ☐ table(s) related to the sequence listing

   b. format of material:

   ☐ on paper

   ☐ in electronic form

   c. time of filing/furnishing:

   ☐ contained in the application as filed.

   ☐ filed together with the application in electronic form.

   ☐ furnished subsequently for the purposes of search.

3. ☐ In addition, in the case that more than one version or copy of a sequence listing and/or table relating thereto has been filed or furnished, the required statements that the information in the subsequent or additional copies is identical to that in the application as filed or does not go beyond the application as filed, as appropriate, were furnished.

4. Additional comments:

WRITTEN OPINION

Box No. V Reasoned statement with regard to novelty, inventive step or industrial applicability; citations and explanations supporting such statement

1. Statement

Novelty	Yes:	Claims	4, 6, 7, 10, 11, 16-20, 25-27, 40-44, 46, 55, 57, 60, 62, 68, 73-75, 90-93
	No:	Claims	1-3, 5, 8, 9, 12-15, 21-24, 28-39, 45, 47-54, 56, 58, 59, 61, 63-67, 69-72, 76-89, 94, 95
Inventive step	Yes:	Claims	
	No:	Claims	1-95
Industrial applicability	Yes:	Claims	1-95
	No:	Claims	

2. Citations and explanations

see separate sheet

Box No. VII Certain defects in the application

see separate sheet

Box No. VIII Certain observations on the application

see separate sheet

1 **Re Item V**

Reasoned statement with regard to novelty, inventive step or industrial applicability; citations and explanations supporting such statement

1.1 Reference is made to the following documents:

D1	WO 2019/138365 A1 (FLOORING IND LTD SARL [LU]) 18 juli 2019 (2019-07-18)
D2	US 2019/211569 A1 (BOO CHRISTIAN [SE] ET AL) 11 juli 2019 (2019-07-11)
D3	DE 20 2007 013059 U1 (FLORING IND LTD [IE]) 15 november 2007 (2007-11-15)
D4	US 2020/131784 A1 (BOUCKÉ EDDY ALBERIC [BE]) 30 april 2020 (2020-04-30)

1.2 The present application does not meet the criteria of patentability, because the subject-matter of claims 1 and 2 is not new.

D1 discloses a : (***figures 1, 17-22***)

*"Multifunctioneel tegelsysteem, in het bijzonder een vloertegelsysteem, omvattende meerdere multifunctionele tegels (**p. 15, line 5 : "two floor panels 1 from a set of floor panels"**), in het bijzonder vloertegels, waarbij de tegels (**"1"**), en bij voorkeur elke tegel, omvatten:*
*- ten minste een eerste zijde (**p. 16, line 28 : "the one long edge 2"**) met een eerste koppelprofiel omvattende:*
*o een zijwaartse tong (**p. 16, line 29 : "a male coupling part 6"**), zich uitstrekkende een richting hoofdzakelijk parallel aan de bovenkant van de tegel,*
*o ten minste een op afstand van de zijwaartse tong gelegen eerste neerwaartse flank (**"DF1", see fig. 21 below**), en*
*o een eerste neerwaartse uitsparing (**"DR1", see fig. 21 below**) gevormd tussen de zijwaartse tong en de eerste neerwaartse flank,*

*- ten minste een tweede zijde (**p. 16, line 30 : "the one short edge 4"**) met een tweede koppelprofiel omvattende:*

*o een neerwaartse tong (**p. 16, lines 30-31 : "a male coupling part 8", see fig. 20 below**), zich uitstrekkende in een richting hoofdzakelijk loodrecht ten opzichte van de bovenkant van de tegel,*
o ten minste een op afstand van de neerwaartse tong gelegen tweede

*neerwaartse flank (**"DF2", see fig. 20 below**),*
*o een tussen de neerwaartse tong en neerwaartse flank gevormde tweede neerwaartse uitsparing (**"DR2", see fig. 20 below**), en*
*o ten minste een tweede vergrendelingselement (**"lock2", see fig. 20 below**) voorzien op de tweede neerwaartse flank van het tweede koppelprofiel*
*- ten minste een derde zijde (**p. 16, line 29 : "the other long edge 3", ""**), en bij voorkeur ten minste twee derde zijden, elke derde zijde met een derde koppelprofiel omvattende:*
*o een derde uitsparing (**p. 17, lines 7-8 : "the female coupling part 7 at the long edge 3 and/or short edge comprises a lateral groove 10"**) die is ingericht voor het accommoderen van ten minste een deel van de zijwaartse tong van het eerste koppelprofiel van een verdere tegel en ten minste een deel van de neerwaartse tong van een verdere tegel (**see fig. 20-21**), genoemde derde uitsparing is gedefinieerd door een bovenlip (**p. 17, line 8 : "upper lip 11"**) en een onderlip, (**p. 17, line 8 : "lower lip 12"**) waarbij genoemde onderlip (**"12"**) is voorzien van een opwaarts vergrendelingselement (**p. 17, line 10 : "an upwardly directed locking part 13"**), en*
*o ten minste een derde vergrendelingselement (**"lock3", see fig. 20 below**) voorzien op een van de derde uitsparing afgekeerde distale zijde van de onderlip (**"12"**) en/of een van de derde uitsparing afgekeerde distale zijde van het opwaartse vergrendelingselement (**"13"**),*

*waarbij de proximale zijde van het opwaartse vergrendelingselement (**"13"**) van het derde koppelprofiel, gericht naar de derde uitsparing, volledig opwaarts hellend in een richting weg van de bovenlip, waarbij de proximale zijde van het opwaartse vergrendelingselement een derde lager contactgedeelte omvat, zich uitstrekkende in een eerste richting (**"low", see fig. 21 below**) en een derde bovenste contactgedeelte contactgedeelte uitstrekkende in een tweede richting (**"up", see fig. 21 below**), afwijkend van de eerste richting,*

*waarbij het eerste koppelprofiel en het derde koppelprofiel zodanig zijn ingericht dat twee van zulke tegels onderling gekoppeld kunnen worden bij de eerste en derde zijde door een draai beweging (**p. 16, lines 33-34 : "by means of a turning movement W"**), waarbij, in gekoppelde toestand:*
*- ten minste een deel van de zijwaartse tong van het eerste koppelprofiel van een tegel is ingevoegd in de derde uitsparing van het derde koppelprofiel van een aangrenzende tegel (**see fig. 21**),*
*- ten minste een deel van het opwaartse vergrendelingselement van het derde koppelprofiel is ingevoegd in de eerste neerwaartse uitsparing van het eerste koppelprofiel (**see fig. 21**), en*

*- een proximale zijde van de zijwaartse tong, gericht naar de eerste neerwaartse flank, werkt samen met het derde bovenste contactgedeelte van het opwaartse vergrendelingselement van het derde koppelprofiel (**see fig. 21 below**),*

*en waarbij het tweede koppelprofiel en het derde koppelprofiel zodanig zijn ingericht dat de twee van dergelijke tegels onderling gekoppeld kunnen worden met de tweede en derde zijde, bij voorkeur door gebruik van een neerwaartse vouwbeweging en/of een verticale beweging (**p. 8, lines 23-24 : "by means of a so-called fold down movement"**), waarbij in een gekoppelde toestand:*
*- ten minste een deel van de neerwaartse tong van het tweede koppelprofiel is ingebracht in de derde uitsparing van het derde koppelprofiel van een aangrenzende tegel (**see fig. 20**),*
*- ten minste een deel van het opwaartse vergrendelingselement van het derde koppelprofiel is ingebracht in de tweede neerwaartse uitsparing van het tweede koppelprofiel (**see fig. 20**),*
*- ten minste **de [~~een~~]** tweede vergrendelingselement (**"lock2"**) is gericht naar, en bij voorkeur samenwerkend met, ten minste **de [~~een~~]** derde vergrendelingselement (**"lock3"**) voor het realiseren van een verticaal vergrendelingseffect (**see fig. 20**), en*
*- een proximale zijde van de neerwaartse tong, gericht naar de tweede neerwaartse flank, van het tweede koppelprofiel samenwerkt met het derde lagere contactgedeelte van het opwaartse vergrendelingselement van het derde koppelprofiel (**see fig. 20**)."*

*claim 2 : "waarbij de eerste tegel en/of de tweede tegel en/of de derde tegel gevormd mogen zijn door dezelfde tegel (**fig. 1**)."*

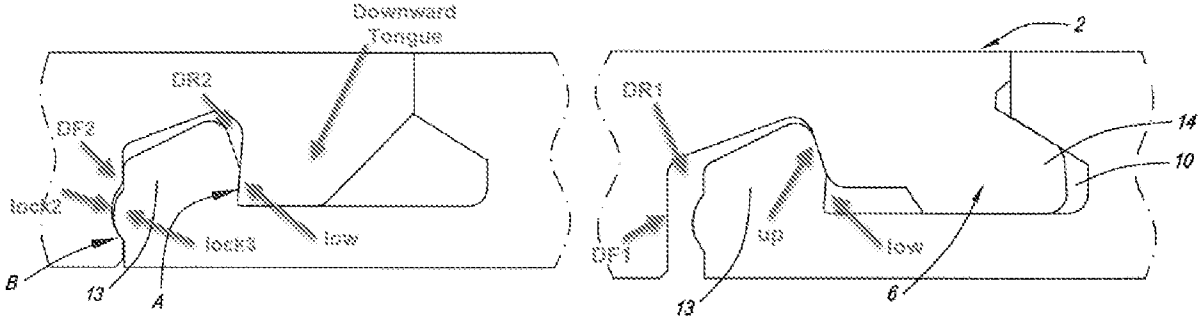

- Figures 1, 20 and 21 from D1 -

Hence, the subject-matter of claims 1 and 2 are not new.

1.3 The additional features of the dependent claims 3, 5, 8-9, 12-15, 21-24, 28-39, 45, 47-54, 56, 58-59, 61, 63-67, 69-72, 76-89, 94 and 95 are also directly known from D1 :

Claims 3, 5 and 8-9 : see fig. 20-21 above.

Claims 12-13 and 14 : see fig. 20 and 21 below, "clos. plane 1", "clos. plane 2".

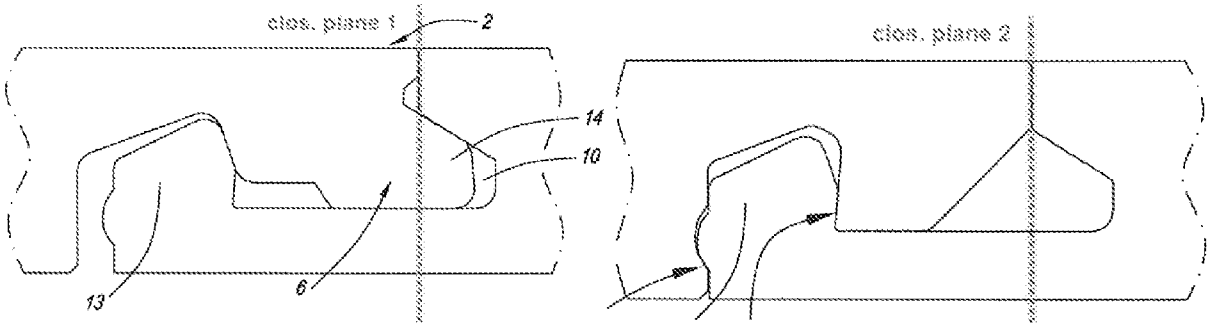

Claims 21-24 and 29 : see fig. 20-21, "1st", and "2nd".

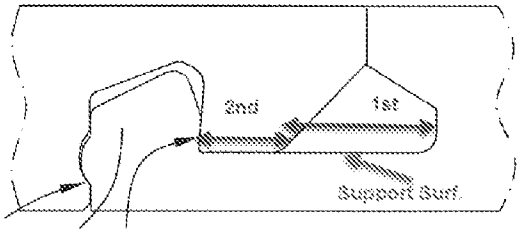

Claim 28 : see fig. 18-19.

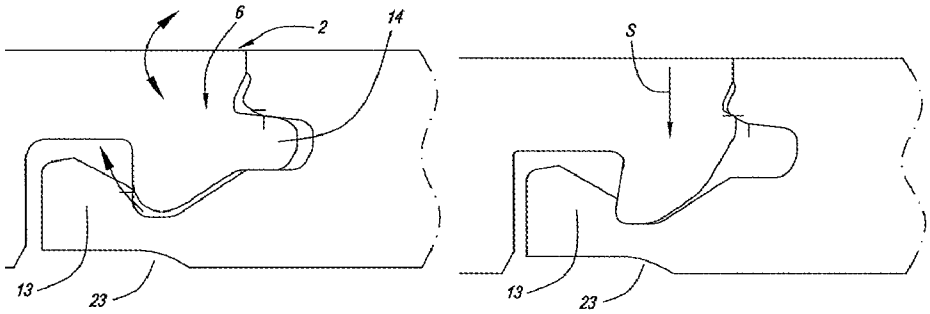

Claims 30-31 : see fig. 21 and minor geometrical adaptation of the bottom of the lateral tongue.

Claim 32 : see fig. 18 and 21.

Claim 33 : see fig. 20.

Claim 34 : see fig. 21, "DF1".

Claims 35-36 : see fig. 1.

Claim 37 : see fig. 20-21, p. 17, lines 5-6 : "in a mutually coupled condition of such short edge and long edge, effect a locking in horizontal direction H as well as a locking in vertical direction V".

Claim 39 : see fig. 20.

Claims 45 and 47 : see fig. 21.

Claim 48 : see fig. 18-19, p. 20, lines 10-12 : "at the underside of the female coupling part of the long edge and/or short edge a recess 23 is present, which recess facilitates an elastic bending during joining".

Claim 49 : see fig. 19 and 21.

Claim 50 : see fig. 20.

Claims 51-52 : see fig. 20-21.

Claim 53 : see fig. 21, "contact zone" and "space".

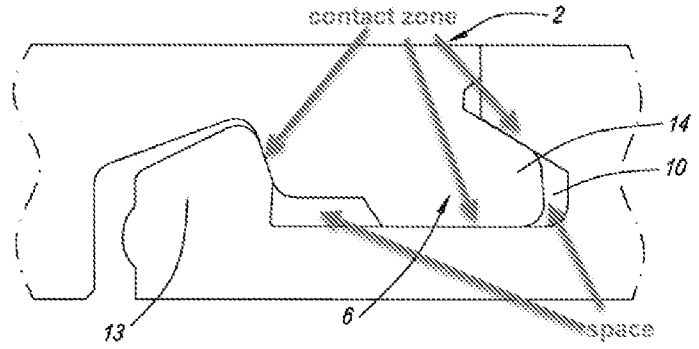

Claim 54 : see fig. 20, "contact zone" and "space".

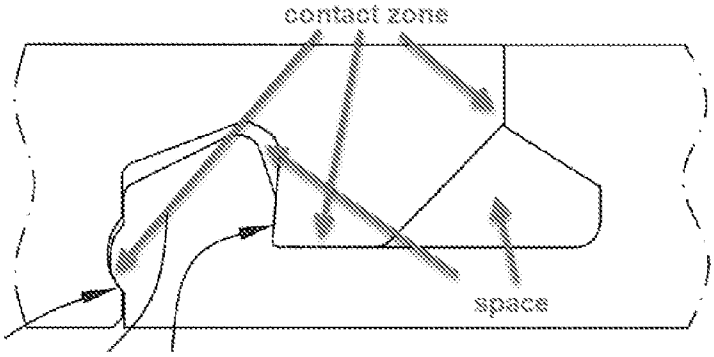

Claim 56 : see fig. 21.

Claims 58 and 59 : see fig. 21.

Claim 61 : see fig. 20.

Claim 63 : see fig. 20-21.

Claims 64-65 : see fig 20.

Claim 66 : see fig. 1 and 22.

Claim 67 : see fig. 20.

Claim 69 : see fig. 1 and 17, p. 12, lines 29-33 : "That the set of floor panels is suitable for forming a floor covering in herringbone pattern implicitly implies that this set consists of at least two types of floor panels. Herein, the coupling parts of the one type of floor panels on one pair of edges are mirrored in respect to the coupling parts of the other type of floor panels at the same pair. More accurately, it is the location of the coupling parts which is mirrored".

Claim 70 : see fig. 22.

Claims 71-72 : see fig. 22, p. 16, line 25 : "these floor panels 1A-1 B are oblong rectangular" and lines 26-28 : "wherein the long as well as the short edges are provided with mechanical coupling parts Q-7-8-9, which allow coupling the floor panels of the set to each other".

Claims 76 and 81 : see p. 10, lines 35-36 : "they can be composed of a substrate and a top layer situated above the substrate and comprising a decor".

Claim 77 : see p. 11, lines 16-18 : "the top layer also comprises a transparent or translucent wear layer situated above the decor".

Claims 78-79 : see p. 11, lines 7-11 : "This carrier sheet can be, for example, a synthetic foil, such as a polyvinyl chloride foil, polyurethane foil, polypropylene foil, polyethylene terephthalate foil or polyethylene foil. Preferably, the carrier sheet is connected to the substrate or another layer of the top layer by means of a thermal laminating process".

Claim 80 : see p. 11, lines 7-11 : "by means of a thermal laminating process".

Claim 82 : see p. 9, line 35 : "the substrate layer is foamed".

Claims 83-84 : see p. 9, lines 12-14 : "The composition comprises at least a synthetic material, such as polyvinyl chloride, polyethylene, polypropylene, polyethylene terephthalate, polyurethane and/or an elastomer.".

Claim 85 : see p. 9, lines 22-23 : "The composition comprises an inorganic filler, such as chalk, talcum and/or lime".

Claim 86 : see p. 12, lines 5-7 : "the floor panels can also comprise a backing layer situated underneath the substrate. The backing layer can be realized, for example, on the basis of cork or on the basis of a thermoplastic synthetic material".

Claim 87 : see fig. 20-21.

Claim 88 : see p. 23, lines 11-12 : "It is clear that the lower lip 12, where it is necessary, shall be sufficiently flexible to allow, during the turning in and/ or out, a locking, unlocking, respectively".

Claim 89 : see fig. 17 and claim 69 above.

Claims 94-95 : see p. 1, lines 4-5 : "a set of floor panels which is suitable for forming a floor covering".

Hence, the subject-matter of claims 3, 5, 8-9, 12-15, 21-24, 28-39, 45, 47-54, 56, 58-59, 61, 63-67, 69-72, 76-89, 94 and 95 is not new.

1.4 Inasmuch as the additional features described in the dependent claims 4, 6-7, 10-11, 16-20, 25-27, 40-44, 46, 55, 57, 60 ,62, 68, 73-75 and 90-93 are not directly known from the cited documents, they concern only minor modifications to the subject-matter of this prior art, which lie within the scope of the customary practice followed by persons skilled in the art, especially as the advantages thus achieved can be readily contemplated in advance.

Reference is made e.g. to the following documents :

Claim 4 : see D2 (fig. 1A-1C and 2A-2C, [0043], and [0060]).

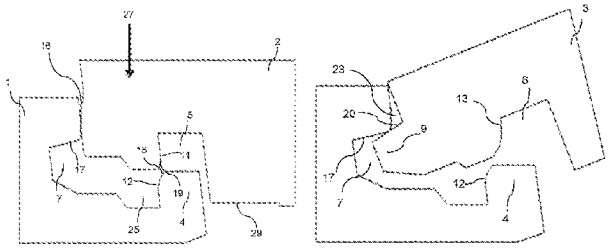

Claims 6-7 : see D3 (fig. 21-24, [0116]-[0118]).

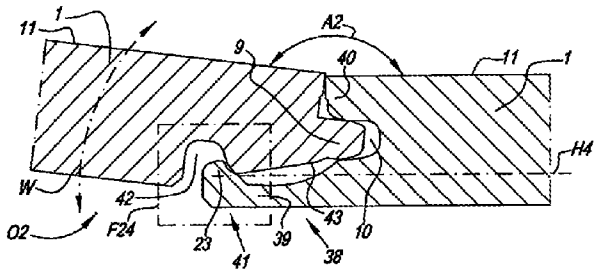

Claim 10 : see D2 (fig. 1A, [0047] : "The locking element 4 may comprise a third guiding surface 18 and the locking groove 5 may comprise a fourth guiding surface 19").

Claim 11 : see D2 (fig. 1A, [0081] : "The first 41 panel and the second 42 panel may have a thickness in the range of about 3 mm to about 12 mm", obvious proportion).

Claims 16-20 : see D4 (fig. 7a, [0248] : "the second coupling profile (702) comprises another second locking element (709), provided at a distal side (711) of the downward tongue (710) facing away from the second downward recess (712)", "the co-action between the additional first or second locking element (706, 709) and the additional third locking element (713) for creating a vertical locking effect in coupled condition of two tiles (700)").

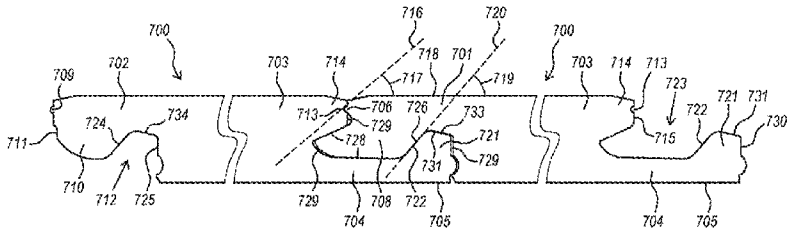

Claims 25-26 : see D4 (fig. 7a-7b).

Claim 27 : see D2 (fig. 1C and 2C).

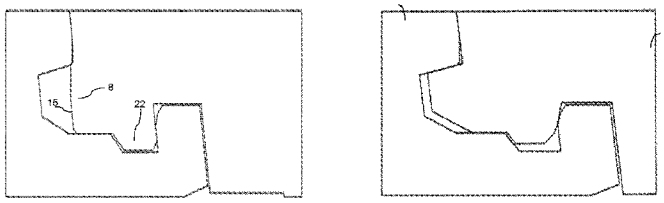

Claim 40 : see D4 and the reasoning of claim 16.

Claims 41-44 : see D4 (fig. 7a).

Claim 46 : see D2 (fig. 1A).

Claim 55 : see D4 (fig. 7a, [0248]).

Claim 57 : see D4 (fig. 7c).

Claims 60 and 62 : see D4 (fig. 7c).

Claim 68 : see D4 (fig. 7a-7c).

Claims 73-75 : see D4 (fig. 2a, [0237] : "a parallelogram-shaped contour (208)", "an acute angle (203) or a obtuse angle (204)", "to form a chevron pattern (205) in a joined state").

Claims 90-91 : see D4 ([0070] : "at least a number of tiles have different sizes and/or different shapes", "the tile system comprises different types of tiles (A and B respectively), wherein the size of a first type of tile (A) differs from the size of second type of tile (B)").

Claims 92-93 : see D4 ([0070] : "Distinctive visual markings may be applied to different tile types, preferably for installation purposes. To this end, distinctive visual markings are preferably applied to an upper side of third recess and/or an upper side of the upward locking element of the third coupling profile of each tile type").

Hence the subject-matter of claims 4, 6-7, 10-11, 16-20, 25-27, 40-44, 46, 55, 57, 60 ,62, 68, 73-75 and 90-93 does not involve an inventive step.

2 **Re Item VII**

Certain defects in the application

2.1 Independent claim 1 is not in the two-part form, which in the present case would be appropriate, with those features known in combination from the prior art being placed in the preamble and the remaining features being included in the characterising part.

2.2 The features of all the claims are not provided with reference signs placed in parentheses.

2.3 The relevant background art disclosed in D1 and D4 is not mentioned in the description, nor are these documents identified therein.

3 **Re Item VIII**

Certain observations on the application

3.1 Although claims 1 and 2 have been drafted as separate independent claims, they appear to relate effectively to the same subject-matter and to differ from each other only with regard to the definition of the subject-matter for which protection is sought and/or in respect of the terminology used for the features of that subject-matter. The aforementioned claims therefore lack conciseness.

Furthermore claim 1 seems to be dependent on claim 1 and should be redrafted accordingly.

3.2 The term "second locking element" used in claim 1 is unclear and leaves the reader in doubt as to the meaning of the technical feature to which it refers (see the second locking element in claim 40), thereby rendering the definition of the subject-matter of said claim unclear.

3.3 The dependency of claim 25 seems to be wrong ("according to ....claims 24-14").

3.4 The subject-matter of claim 40 seems to unduly repeat the subject-matter of claim 16 confusing the reader.

3.5 Claim 43 also repeats unnecessarily all the features of claim 41 and may be deleted.

3.6 Claim 44 is in contradiction with claim 42 ("extend **toward** the first downward flank") although it is dependent on it.