C. DOERING, Jr.

APPARATUS FOR COATING ARTICLES WITH PULVERULENT MATERIAL.

APPLICATION FILED JAN. 7, 1911.

1,068,864. **Patented July 29, 1913.**

4 SHEETS—SHEET 1.

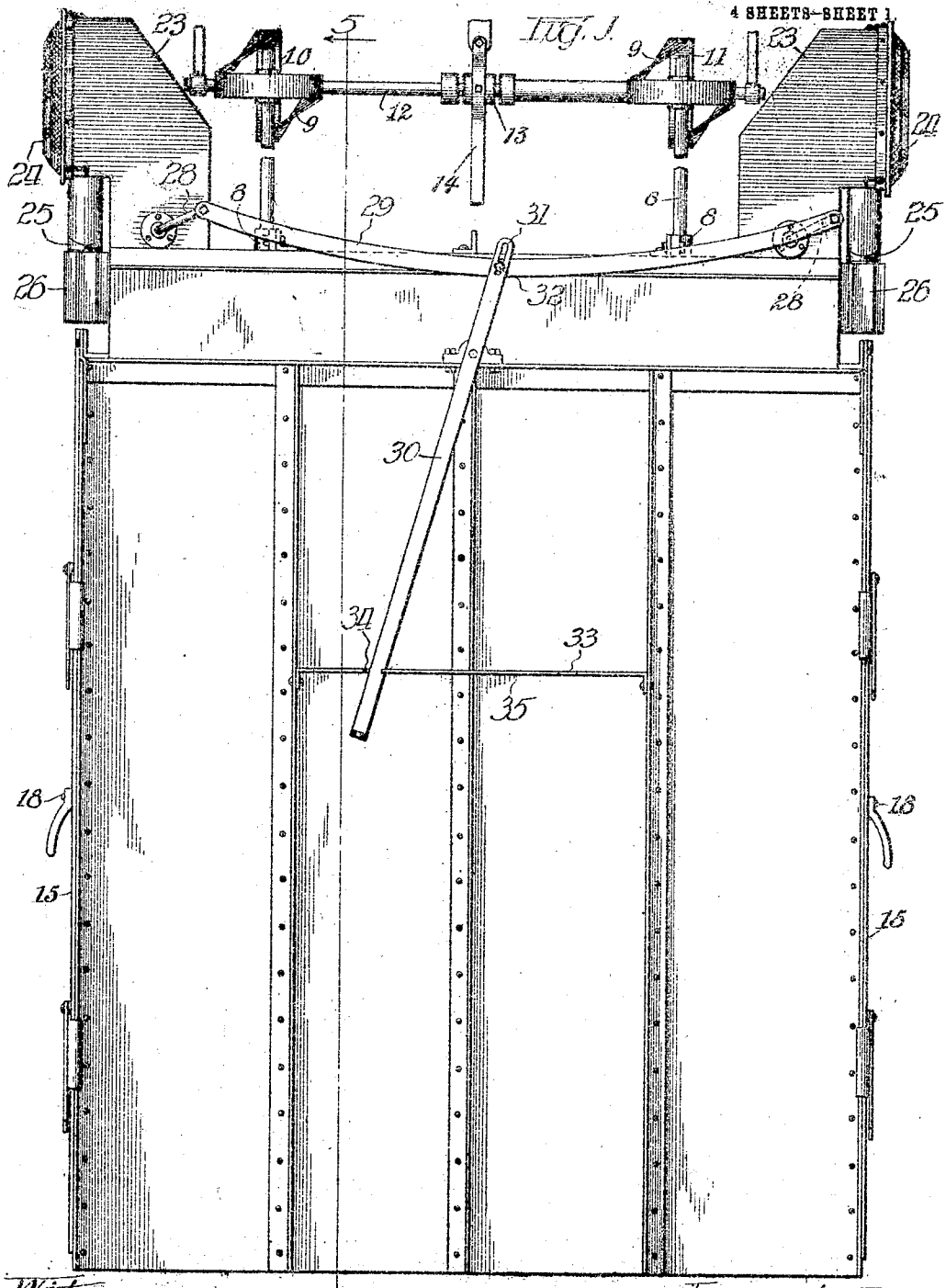

Witnesses:
Robert H. Weir
Leo J. DuMais

Inventor:
Charles Doering, Jr.
By Rudolph [illegible] Atty.

C. DOERING, JR.

APPARATUS FOR COATING ARTICLES WITH PULVERULENT MATERIAL.

APPLICATION FILED JAN. 7, 1911.

1,068,864.

Patented July 29, 1913.

4 SHEETS—SHEET 2

Fig. 3.

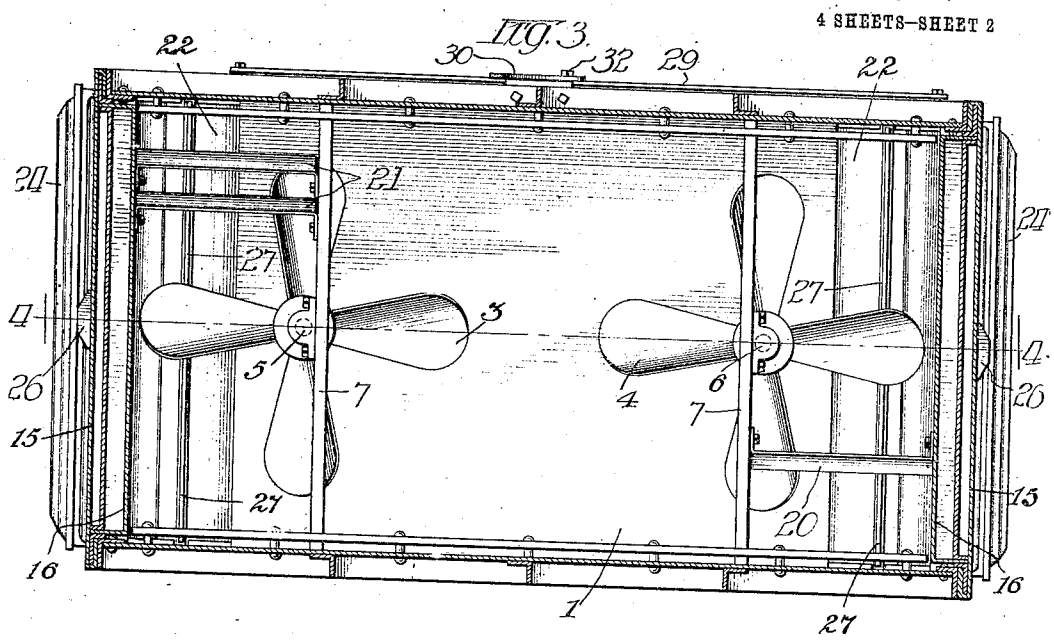

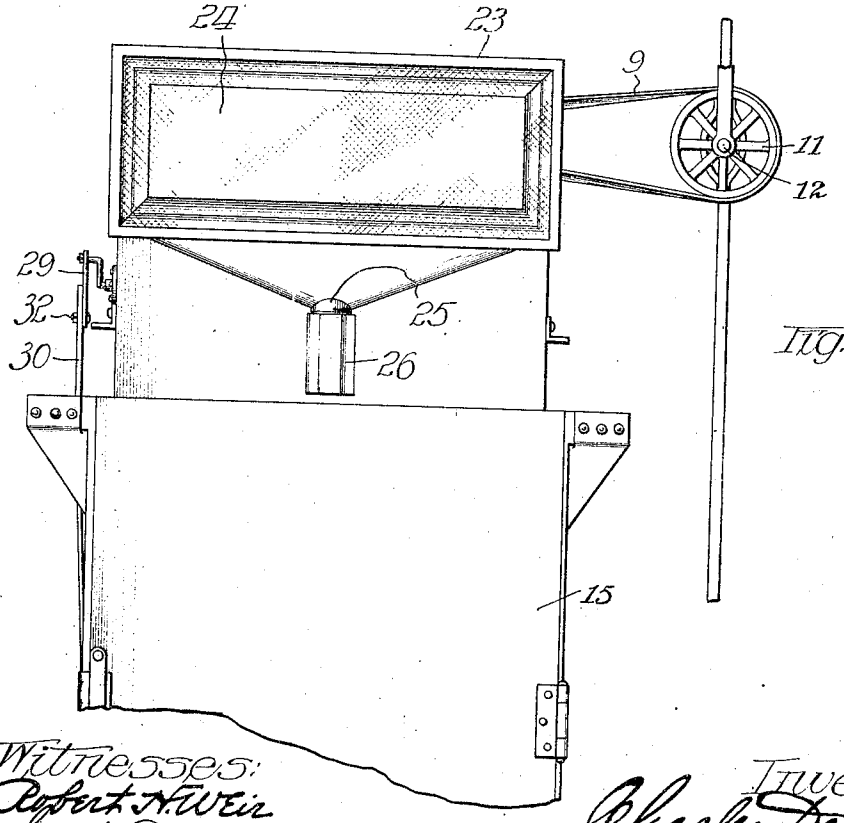

Fig. 2.

Witnesses:
Robert N. Weir
Leo J. DuMais.

Inventor
Charles Doering, Jr
By Rudolph Ganz Atty.

C. DOERING, Jr.

APPARATUS FOR COATING ARTICLES WITH PULVERULENT MATERIAL.

APPLICATION FILED JAN. 7, 1911.

1.068,864.

Patented July 29, 1913.

4 SHEETS—SHEET 3.

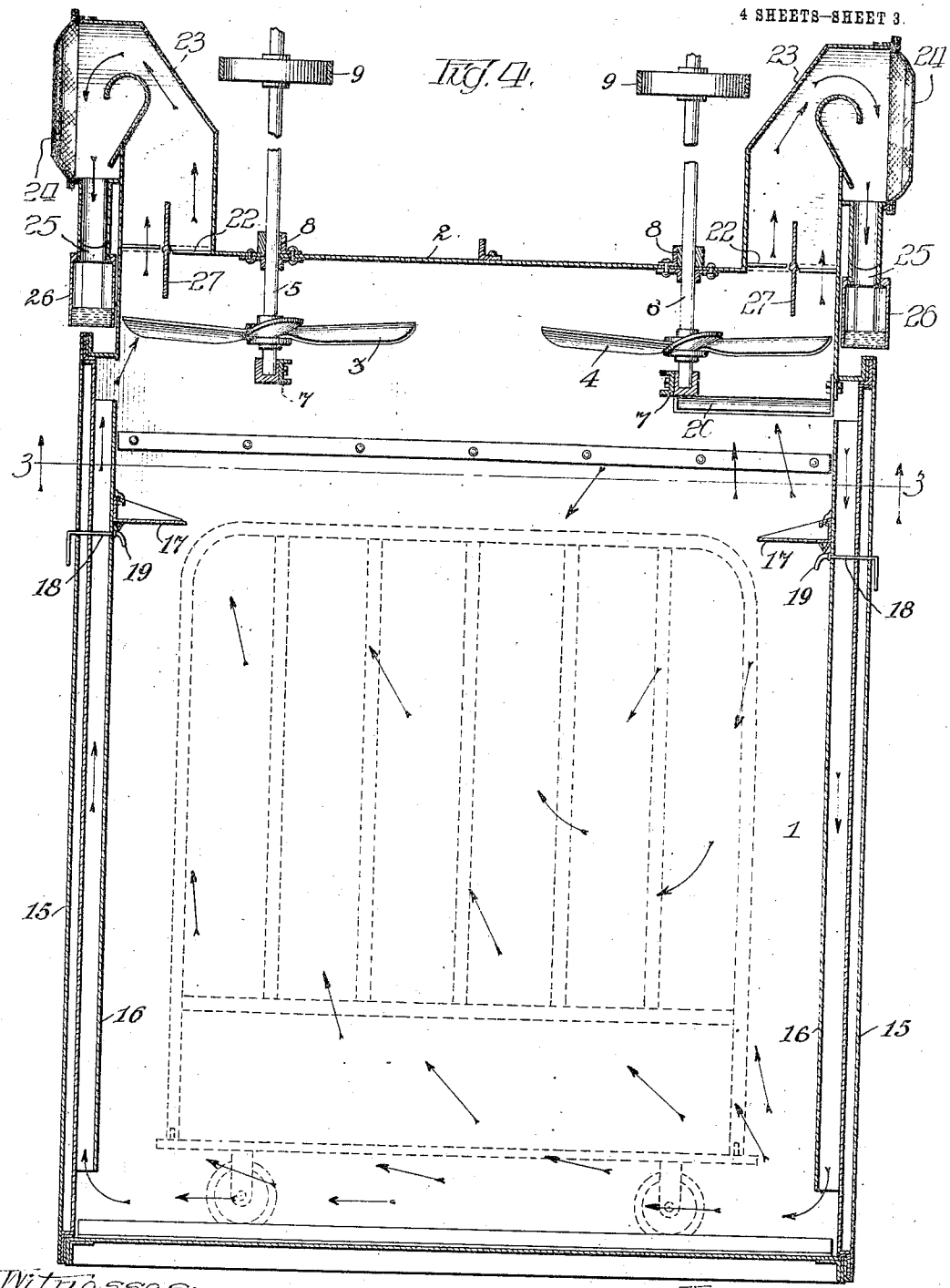

Witnesses:
Robert H. Weir
Leo J. DuMais

Inventor
Charles Doering, Jr.
By Rudolph Mc Loth Atty.

C. DOERING, Jr.

APPARATUS FOR COATING ARTICLES WITH PULVERULENT MATERIAL.

APPLICATION FILED JAN. 7, 1911.

1,068,864. Patented July 29, 1913

4 SHEETS—SHEET 4.

Fig. 5.

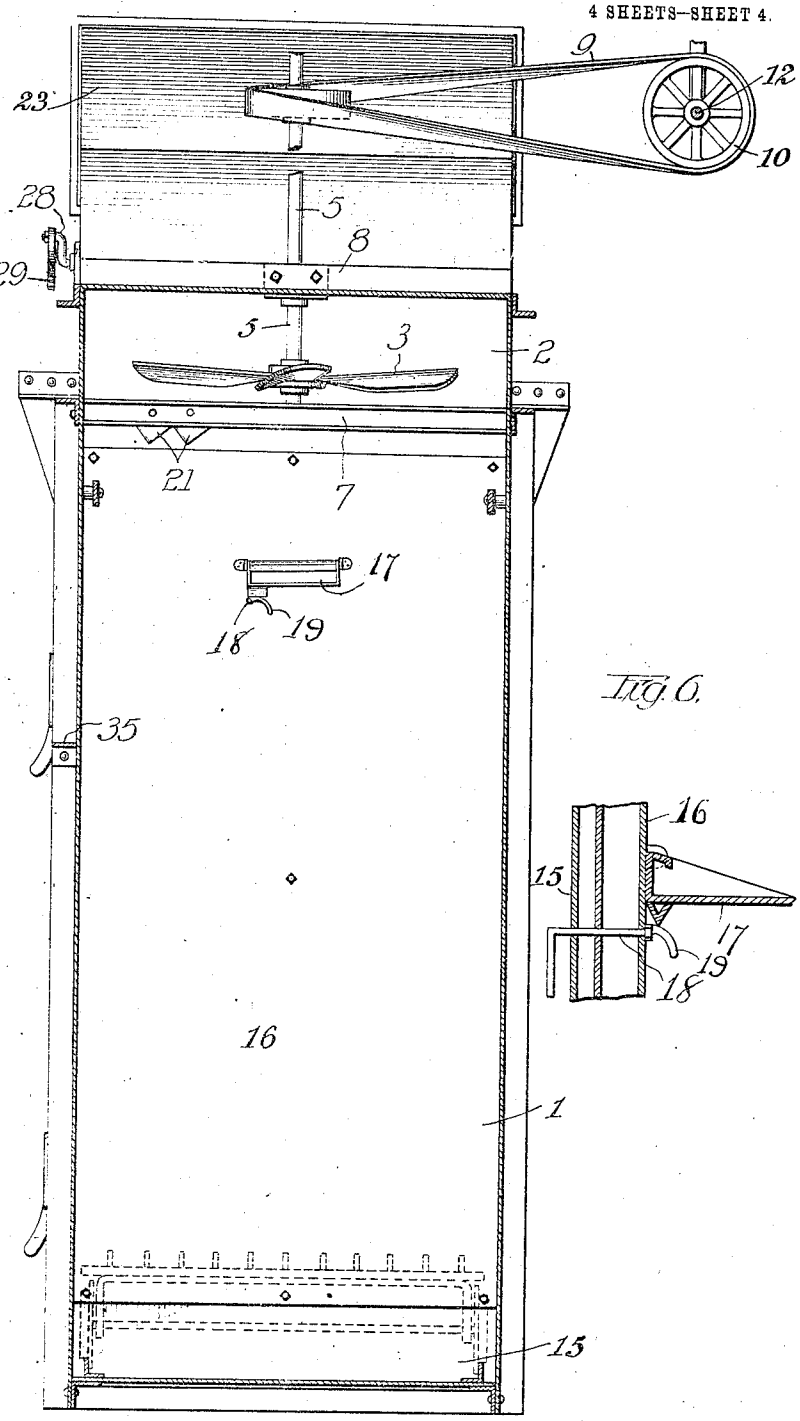

Fig. 6.

Witnesses.
Robert H. Weir
Leo J. DuMais

Inventor
Charles Doering, Jr.
By Rudolph Imm Fox Atty.

UNITED STATES PATENT OFFICE.

CHARLES DOERING, JR., OF CHICAGO, ILLINOIS, ASSIGNOR TO ADAMS & ELTING CO., OF CHICAGO, ILLINOIS, A CORPORATION OF ILLINOIS.

APPARATUS FOR COATING ARTICLES WITH PULVERULENT MATERIAL.

1,068,864. Specification of Letters Patent. Patented July 29, 1913.

Application filed January 7, 1911. Serial No. 601,408.

To all whom it may concern:

Be it known that I, CHARLES DOERING, Jr., citizen of the United States, residing at Chicago, in the county of Cook and State of Illinois, have invented certain new and useful Improvements in Apparatus for Coating Articles with Pulverulent Materials; and I do hereby declare the following to be a full, clear, and exact description of the invention, such as will enable others skilled in the art to which it appertains to make and use the same.

This invention relates to improvements in apparatus for coating articles with pulverulent material, and has for its object to provide a simple and efficient apparatus of this character, and consists in the features of construction and combinations of parts hereinafter fully described and claimed.

In the accompanying drawings illustrating the invention: Figure —1— is a view in side elevation of a machine constructed in accordance with my invention. Fig. —2— is a fragmentary end elevation of the same. Fig. —3— is a horizontal section of the same on the line 3—3 of Fig. —4—. Fig. —4— is a central vertical longitudinal section of the same on the line 4—4 of Fig. —3—. Fig. —5— is a vertical transverse section of the same on the line 5—5 of Fig. —1—. Fig. —6— is a fragmentary sectional view of one of the doors showing the manner in which the receptacle is secured to the same.

My present invention relates particularly to improvements in machines of this class commonly known as bronzing machines, shown and described in Letters Patent No. 976443 issued November 22, 1910. First: To provide means whereby the air current by means of which the pulverulent material is conveyed and applied to the article may be reversed in direction. Second: To provide means disposed in the path of the air currents for deflecting part of the same whereby a more or less irregular direction of motion of the air currents is produced. Third: To provide means for producing a very strong flow of air along the floor of the coating chamber so as to pick up from the latter all particles of the pulverulent material which may be deposited there.

In shape and general appearance the present machine is substantially identical with that described in the aforesaid Letters Patent. The coating chamber is rectangular and is provided at either end with a door for the admission and exit of trucks carrying the articles to be coated into and out of the machine, said trucks traveling upon rails within the chamber which are adapted to be rendered continuous with rails disposed externally thereof, this being accomplished in any suitable manner. Above the coating chamber 1 is a hood 2 open at its lower end. In said hood there are disposed two fans 3 and 4 respectively, mounted upon vertical shafts 5 and 6 respectively, which are suitably journaled in bearings supported upon the cross-bars 7 in the lower end portion of the hood 2 and in bearings 8 mounted in the upper wall of said hood. Each of said shafts 5 and 6 respectively, is geared by means of a belt 9 to pulleys 10 and 11 respectively, disposed on a countershaft 12 at some distance from the machine, said pulleys being loose on said shaft and each being adapted to be clutched to rotate therewith by means of the clutch member 13 actuated by a lever 14 and engaging clutch members disposed rigid with said respective pulleys. The said shafts 5 and 6 are geared to rotate in the same direction so that each of said fans serves to project a current of air downwardly upon the bottom of the coating chamber.

Upon the inner face of the doors 15 of the coating chamber there is mounted a U-shaped member 16 coacting with the inner face of the door to form a narrow rectangular flue through which air is adapted to pass, the lower end of each of said flues being disposed relatively near to the floor so as to cause the air currents delivered from said flues to impinge upon and follow the said floor of the coating chamber 1 to prevent any of the pulverulent material carried by the air currents from becoming deposited upon said floor, and further to remove therefrom any coating material which may have become deposited upon the same. The air current projected by said respective fans is adapted to pass downwardly to impinge upon the floor of the chamber thence longitudinally of the coating chamber to the other end portion of the same and thence upwardly into the hood and longitudinally of said hood back to the fan. Owing to the

distaste of fluid currents from turning sharply the air is given a relatively rotary movement about a horizontal axis.

The pulverulent material to be applied to the articles carried by the truck is preferably deposited upon the receptacle 17 therefor mounted upon one or both said doors as desired, said receptacle being adapted to be opened and closed from the exterior of the machine in any suitable manner. The said receptacle 17 is pivotally secured to the inner face of the U-shaped member 16 and is adapted to be turned up, so that the open portion of the same is opposed by said U-shaped member, by means of the shaft 18 passing through the door and through said U-shaped member and provided upon its inner end with a spiral projection 19 adapted to engage the lower portion of said receptacle 17 to turn the same into its closed position, this construction being fully illustrated in Fig. 6 and described in the aforesaid patent.

As shown in Fig. —3— deflecting devices 20 and 21 are disposed in the path of the air currents delivered from the respective fans, each of said deflectors consisting of a U-shaped member secured at one end to one of said cross-bars 7 and at its other end to the inner face of the nearest adjacent wall of the hood 2, the middle portion of each of said members being disposed angularly relatively to the direction of travel of the air current whereby the air impinging upon the same is given a slight helical movement which serves to promote uniform distribution of the coating material upon the surfaces to be coated. The number and relative disposition of said deflectors may be increased and diminished as desired to most effectually produce the desired result.

Mounted upon the hood and communicating therewith through openings 22 are dust collectors 23 of any suitable construction, each of the latter being provided with a fabric covered outlet 24 for air at which coating material is filtered therefrom, the latter being delivered through pipes 25 into receptacles 26 removably mounted upon the lower ends of said pipes. The openings 22 are controlled by dampers 27 each of which is equipped with a crank arm 28 extending through one of the side walls of the dust collector, the free ends of said arms 28 being connected with each other by means of a link 29 so as to move said dampers 27 in unison. The said link 29 is adapted to be actuated by means of a lever 30 pivotally mounted between its ends upon the casing of the machine and provided in its upper end with a longitudinal slot 31 in which a pin 32 disposed between the ends of said link 29 is received. The said lever is adapted to be engaged in recesses 33 and 34 respectively, in a member 35 mounted upon the outer wall of the coating chamber and by means of which said lever 30 is held at either limit of its movement to maintain the said dampers 27 opened or closed as desired. The said lever is adapted to be sprung into said recesses 33 and 34 respectively, in a well-known manner.

The operation of the machine is as follows: The truck carrying the articles to be coated, and which is indicated in dotted lines in Fig. —4—, having been introduced into the coating chamber, the doors of the latter are closed. The receptacle 17 will have been previously supplied with the coating material and after introduction of said truck with its load one of the fans is set in motion by means of the clutch member 13 in an obvious manner. The rotation of said fan causes an air current to be produced which passes downwardly toward the floor of the machine thence longitudinally of the coating chamber upwardly past the other fan and again longitudinally, a relatively rotary motion being thus imparted to said air current, and by means of the deflectors 20 and 21 being rendered somewhat irregular. The air current picks coating material from the receptacle 17 in travel and, owing to its very rapid motion, holds the same in suspension, thereby causing it to be conveyed and applied to the surfaces to be coated. The dampers 27 are maintained closed at this time so that all of the coating material is maintained in suspension in the air contained within the coating chamber and maintained in motion by the then operating fan. After one of said fans has been maintained in motion for some time the position of the clutch member 13 is reversed so as to release the pulley first clutched rigid with the countershaft and to clutch the other pulley rigid therewith thereby setting the second fan in motion. The latter produces a relatively rotating air current traveling in the opposite direction from that produced by the first-mentioned fan. Both said fans are alternately set in motion at as many different intervals of as long duration each as may be deemed requisite by the operator to produce the desired result, and, thereafter, when it is desired to clarify the coating chamber of coating material the receptacle or receptacles 17 are closed and the dampers 27 are opened whereupon some of the air contained within the chamber passes into said dust collectors and is discharged through the fabric covered opening 24 thereby separating the coating material therefrom and causing the same to be collected in the receptacles 26. The air discharged through one of said openings 24 is replaced by air entering the other thereof and by reversing the motion of the air during the interval in which the coating chamber is being clarified the induction and eduction of air is reversed as is also

the point of collection of the suspended coating material. After the chamber has been clarified of coating material and the fans stopped, the doors are opened and the truck containing the coated articles removed. A second truck is then introduced into the coating chamber and the foregoing operation is repeated.

During clarification of the coating chamber the air currents which are maintained violently in motion serve to remove from the coated articles all particles of coating material which have not become firmly lodged upon the tacky size-coating previously applied so that the necessity of dusting the coated articles after removal from the machine and the consequent waste of coating material is obviated. The unapplied particles also serve, by repeated contact with the coated surface, to burnish the latter so that when the coated article is removed it bears a relatively high polish.

The above described means for clarifying the coating chamber of coating material after the coating operation has been completed, forms no part of my present invention, the same being fully described and claimed in the aforesaid patent.

In a pending application Serial Number 594796 filed November 29, 1910, I have described and claimed apparatus for coating articles with pulverulent material in which the direction of travel of the air currents is reversible by means of dampers but in that construction the fan is disposed externally of the coating chamber or chambers and delivers into and withdraws from the latter through connecting flues.

The present construction affords the advantage of occupying less space, affording less friction, and promoting motion of all of the air contained within the chamber so that there is no "dead" space in which coating material may collect during the coating operation.

I claim as my invention:

1. In an apparatus of the kind specified, a coating chamber adapted to receive the articles to be coated, a coating material supply, means disposed within said chamber for setting the contained air in motion in respectively opposite directions, and devices controlling said means for determining the direction of travel of the air currents.

2. In an apparatus of the kind specified, a coating chamber adapted to receive the articles to be coated, a coating material supply, means disposed within said chamber for setting the contained air in motion in respectively opposite directions, and devices manually operable from the exterior of the coating chamber controlling said means for determining the direction of travel of the air currents.

3. In an apparatus of the kind specified, a closed coating chamber adapted to receive articles to be coated, two fans adapted to impart movement to the air in said chamber in respectively opposite directions, means controlling said fans whereby only one at a time thereof may be set in motion, and means for introducing coating material into said air currents.

4. In an apparatus of the kind specified, a closed coating chamber adapted to receive articles to be coated, two fans adapted to impart movement to the air in said chamber in respectively opposite directions, means controlling said fans whereby only one at a time thereof may be set in motion, flues disposed at either end of said coating chamber through which a part of the air projected by said respective fans is adapted to pass, said flues discharging adjacent the floor of the coating chamber and adapted to promote travel of air the entire length of and along the floor of the coating chamber, and means for introducing coating material into the said air currents.

In testimony whereof I have signed my name in presence of two subscribing witnesses.

CHARLES DOERING, JR.

Witnesses:
M. M. BOYLE,
JACOB M. WELLES.