March 9, 1937. K. DIENST 2,073,553

APPARATUS FOR DRYING GRAIN

Filed Nov. 25, 1935 3 Sheets-Sheet 1

FIG.1

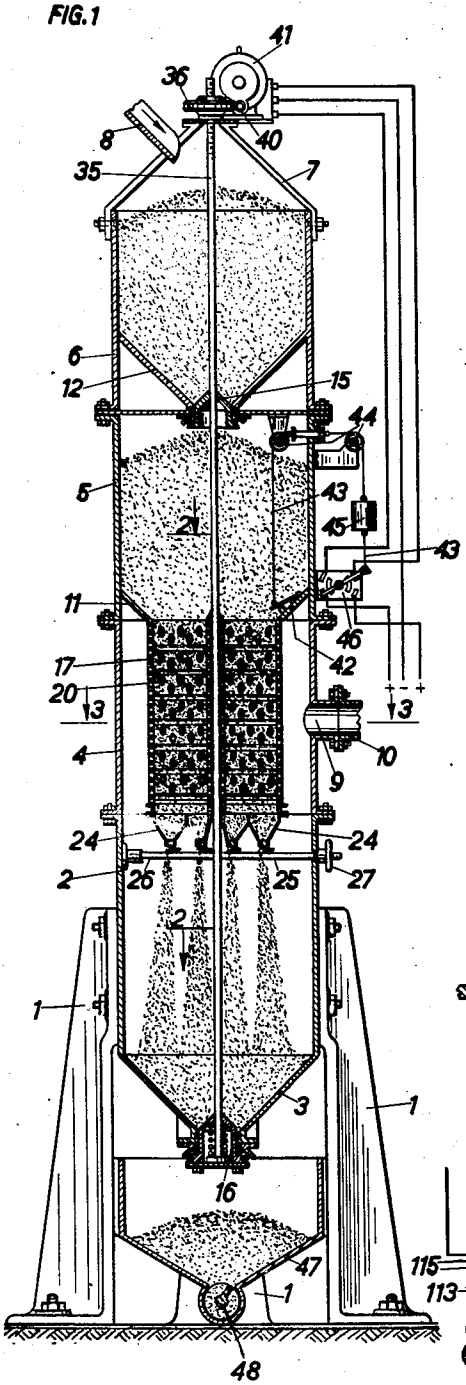

FIG. 4

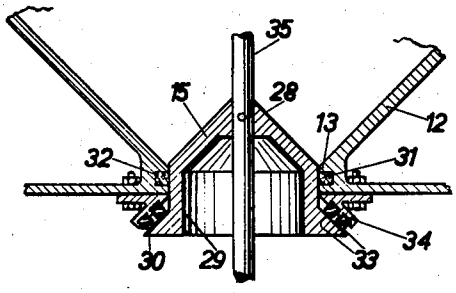

FIG. 5

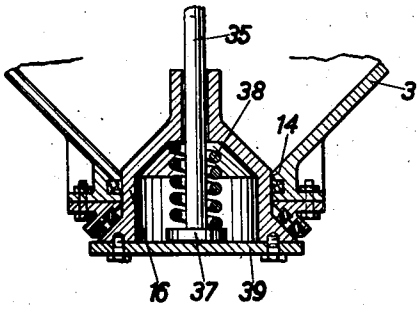

FIG.7

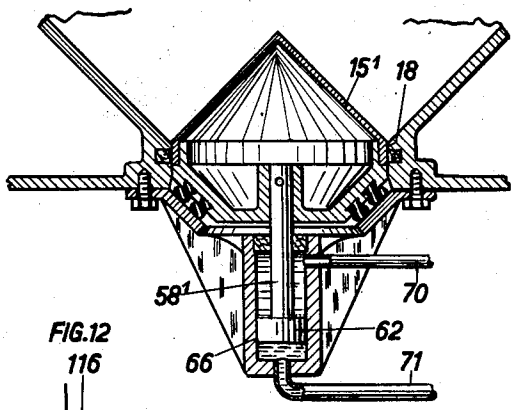

FIG.12

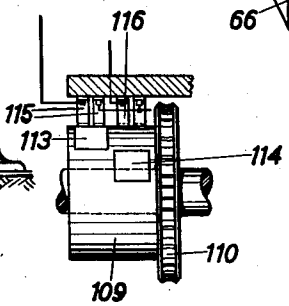

Karl Dienst
Inventor
F. W. Dakin,
Attorney

March 9, 1937. K. DIENST 2,073,553

APPARATUS FOR DRYING GRAIN

Filed Nov. 25, 1935 3 Sheets-Sheet 2

FIG.2

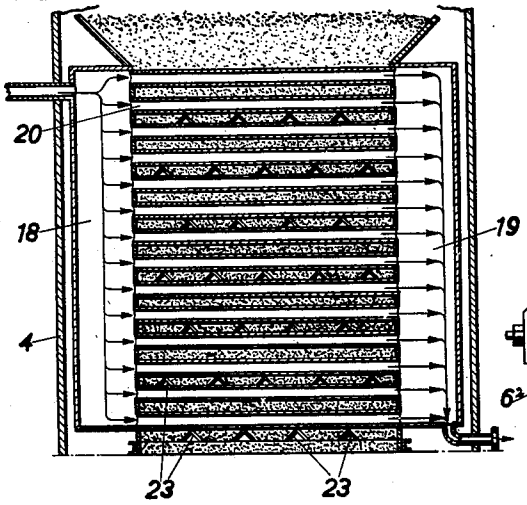

FIG. 13

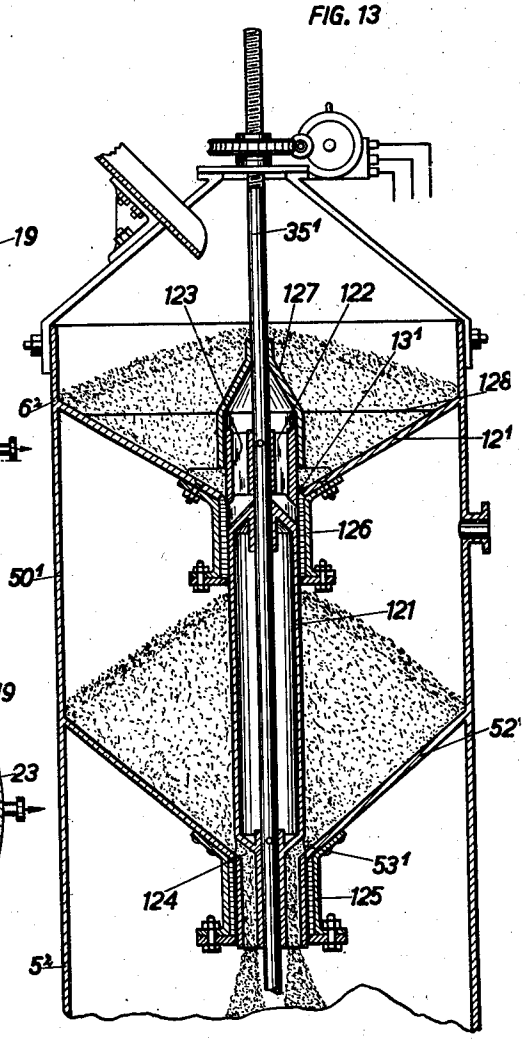

FIG.3

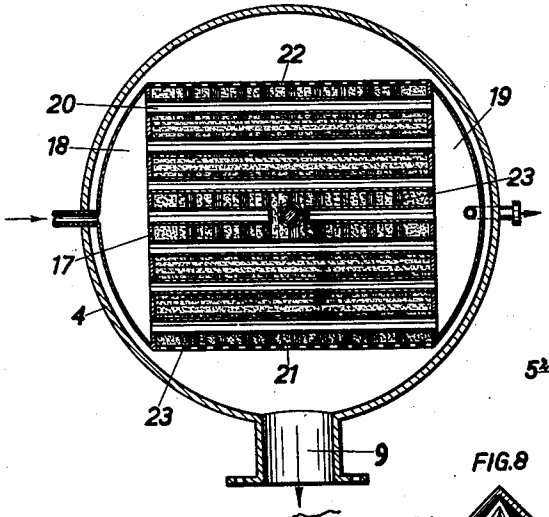

FIG.8

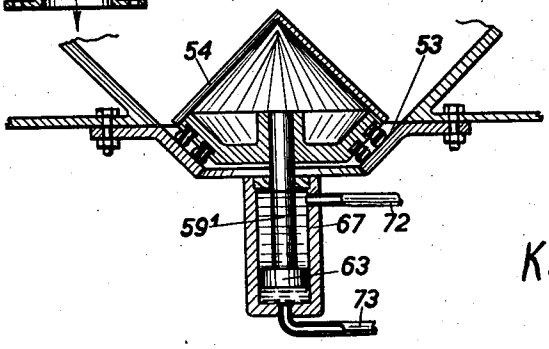

Karl Dienst
Inventor
H. W. Dahm,
Attorney.

March 9, 1937. K. DIENST 2,073,553

APPARATUS FOR DRYING GRAIN

Filed Nov. 25, 1935 3 Sheets-Sheet 3

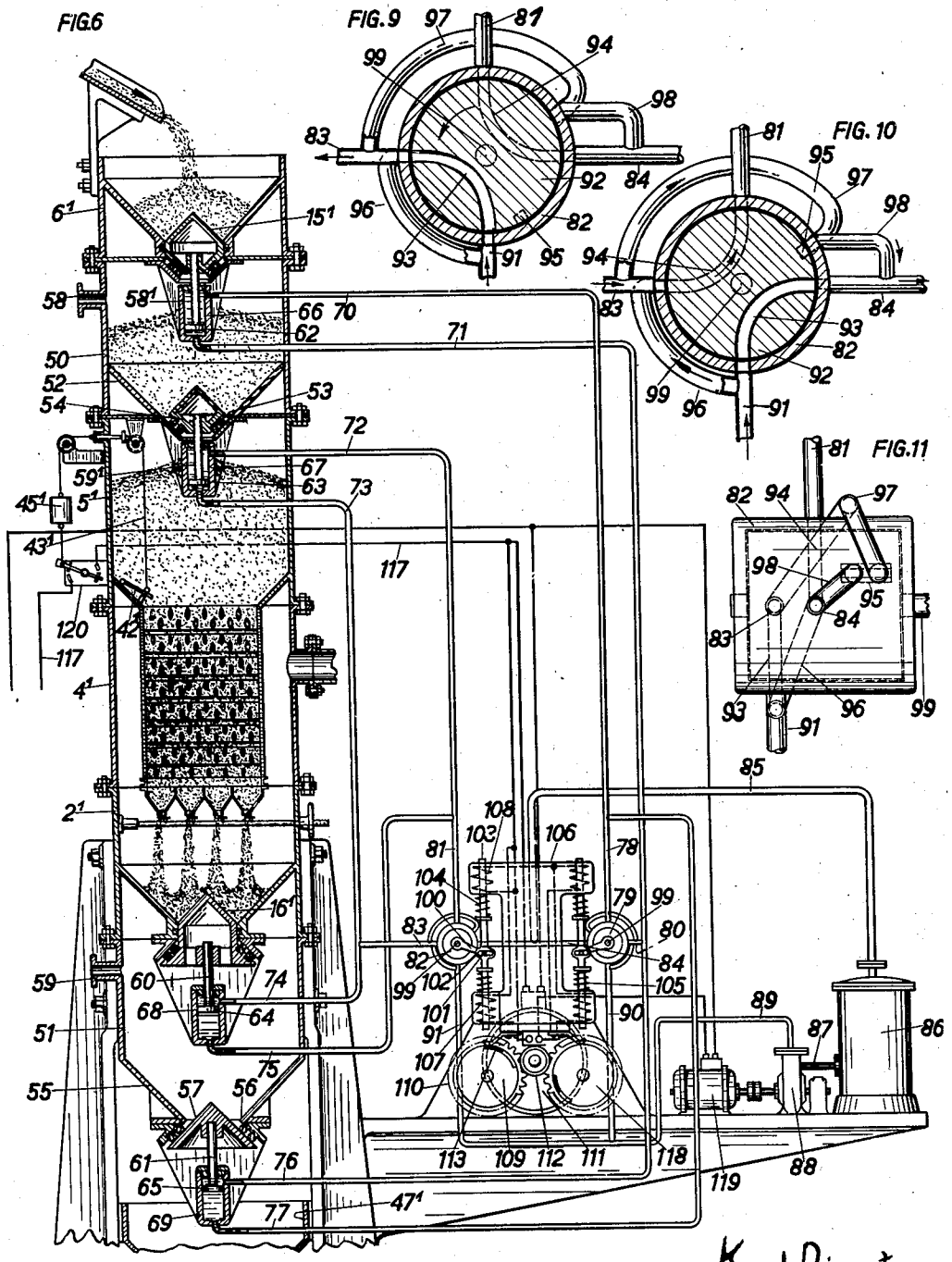

Karl Dienst
Inventor

Attorney

Patented Mar. 9, 1937 2,073,553

UNITED STATES PATENT OFFICE

2,073,553

APPARATUS FOR DRYING GRAIN

Karl Dienst, Hildesheim, Germany

Application November 25, 1935, Serial No. 51,533
In Germany June 26, 1933

15 Claims. (Cl. 34—34)

My invention relates to improvements in apparatus for drying grain, and more particularly in apparatus of the type comprising an upright grain drying shaft having a chamber for supplying the grain to be dried at its top, a chamber for removing the dry material at its bottom, and an intermediate vacuum chamber provided with heating means. The vacuum chamber contains at the same time and under the same vacuum the grain to be dried, the grain in the drying state and the dried grain. One of the objects of the improvements is to provide an apparatus of this type by means of which the grain is dried under vacuum continuously and in uninterrupted operation within a short time and at comparatively low temperature, the power needed for operating the apparatus being likewise small. The apparatus may be used for drying grain for storing, and it may also be used for drying grain which has been washed or moistened, and which is to be prepared for grinding.

With the aforesaid object in view my invention consists in dividing the said intermediate vacuum chamber located between the supply and delivery chambers into three sections, the uppermost section being constructed for storing the grain prior to drying, the intermediate section being provided with heating and evacuating means and having the function of vaporizing the humidity of the grain, and the lowermost section being constructed for receiving the grain after drying, the grain being continuously removed from the said intermediate or vaporizing section so that it continuously drizzles through the same.

Another object of the improvements is to provide an apparatus of the class indicated in which the vacuum within the vacuum chamber is not materially affected by the supplying and delivering operations, and with this object in view I provide subsidiary chambers intermediate the said vacuum chamber and the chambers located respectively above and below the same, the said subsidiary chambers being connected with evacuating means and with means for temporarily connecting the same with the adjacent chambers located respectively above and below the same.

In the operation of the apparatus it is important that the valves or gates for connecting and disconnecting the chambers be constructed so that the grain is transferred from one chamber to the other one without permitting the access of outer air to the vacuum chamber or chambers.

For the purpose of explaining the invention several examples embodying the same have been shown in the accompanying drawings in which the same reference characters have been used in all the views to indicate corresponding parts. In said drawings

Fig. 1 is a vertical section of an apparatus with mechanically operated valves,

Fig. 2 is a fragmentary sectional elevation on a larger scale showing the heated intermediate section of the vacuum chamber of the apparatus illustrated in Fig. 1, the said section being taken on the line 2—2 of Fig. 1 and on a plane perpendicular to the plane of Fig. 1,

Fig. 3 is a sectional plan view taken on the line 3—3 of Fig. 1,

Fig. 4 is a detail sectional elevation on an enlarged scale showing the valve located between the supplying chamber and the vacuum chamber,

Fig. 5 is a similar sectional elevation showing the valve at the bottom of the vacuum chamber,

Fig. 6 is a sectional elevation similar to the one illustrated in Fig. 1 of an hydraulically driven apparatus and showing a modification in which subsidiary chambers are provided respectively between the supplying and delivering chambers and the vacuum chamber,

Fig. 7 is a sectional elevation similar to the one illustrated in Fig. 4 and showing the valve provided in the apparatus illustrated in Fig. 6 between the uppermost supplying chamber and the adjacent subsidiary chamber,

Fig. 8 is a sectional elevation similar to the one illustrated in Fig. 4 and showing the valve intermediate the upper chamber and the vacuum chamber located below the same of an hydraulically driven apparatus illustrated in Fig. 6,

Figs. 9 and 10 are sectional elevations showing one of the valves of Fig. 6 controlling the supply of pressure fluid to the cylinders and pistons controlling the valves intermediate the chambers of the apparatus, the plugs of the valves being shown in different positions,

Fig. 11 is an elevation of the said valve viewed from the right in Fig. 10,

Fig. 12 is a detail view showing a rotary switch of Fig. 6 forming a part of the mechanism controlling the valves of the apparatus,

Fig. 13 is a detail sectional elevation showing a modification of the device of Fig. 6 by the use of slide valves.

As is shown in Fig. 1, the grain drying apparatus comprises a vertical sectional cylindrical shaft 2 which is mounted on pillars 1, and which

has a bottom 3 in the form of a hopper, the said bottom being normally closed by a valve 16. On the shaft 2 a sectional cylindrical shaft section 4 is mounted which is made integral with a tubular stud 9 connected with a vacuum conduit 10, the said sectional shaft 4 including a radiator 17.

On the sectional shaft section 4 a cylindrical shaft 5 is mounted which is formed with a downwardly tapering bottom 11. On the shaft section 5 a shaft section 6 is mounted which is open at its top and which has a downwardly tapering bottom 12 normally closed by a valve 15. To the shaft section 6 grain to be dried is supplied by means of a chute 8. The valves 15, 16 are fitted in openings 13, 14 of the hopper shaped bottoms 12 and 3, as is best shown in Figs. 4 and 5. The shaft sections 2, 4, and 5 and the bottom 12 of the shaft section 6 form a vacuum chamber which is closed all around, and which is adapted to be heated. In its uppermost or storage part the said vacuum chamber receives the grain to be dried, the said grain is supplied to the median part of the chamber which is provided with the radiator 17, and the bottom part of the vacuum chamber which is provided by the shaft section 2 contains the dried material.

The radiator 17 is illustrated in detail in Figs. 2 and 3. It comprises a jacket or manifold 18 through which steam is supplied to the radiator elements, and a manifold 19 in which the water of condensation is collected. Between the said manifolds 18 and 19 there are heating pipes 20 which are preferably oval in cross-section. The side walls 21 and 22 of the radiator 17 are perforated thus connecting the grain located between the pipes 20 with the main part of the vacuum chamber 2, 4, 5. For more readily removing the vapor from the body of grain located between the radiator elements roof shaped plates 23 are provided between the side walls 21 and 22 of the radiator. The vapor is collected below the said plates 23 and it is passed therefrom into the vacuum chamber 2, 4, 5 which is being evacuated through the pipe 10. The bottom of the radiator 17 comprises four hoppers 24 which are adapted to be entirely or partly opened or closed by gates 25. The said gates are fixed to a stem 26 which is adapted to be shifted endwise by means of a hand wheel 27. Thus by turning the said hand wheel all the gates 25 may be exactly and uniformly set into positions for opening the hoppers 24 as far as desired.

The valve 15 for closing the opening 13 of the bottom 12 of the upper chamber 6 comprises a cylindrical portion 29, a conical head part 28 and an outwardly directed conical flange or skirt portion 30. The wall of the opening 13 of the hopper 12 has a packing ring 32 embedded in a groove 31, the said packing ring cooperating with the cylindrical portion 29 of the valve 15 for preliminarily closing the hopper. On a ring 34 placed around the opening 13 rubber rings are mounted which are fitted in dove-tailed annular grooves of the ring 34, and which are engaged by the flange 30 of the valve body 15 when the valve is closed. The valve 15 is fixed to a stem 35 which extends all through the apparatus from the top to the bottom thereof, and which is screw-threaded at its top, a worm gear 36 being mounted on the said screw-threaded part of the stem for moving the same upwardly or downwardly. At its bottom end the stem is provided with a flange 37 located within the valve body 16, a spring 38 being located between the said flange and the valve body by means of which the valve 16 is yieldingly placed on its seat for closing the opening 14 of the bottom 3. At its bottom the valve body is closed by a disk 39 which is engaged by the flange 37 when the stem 35 is forced downwardly for opening the valve 16. The general shape of the valve 16 is similar to that of the valve 15.

The worm gearing 36 is engaged by a worm 40 to which rotary movement is imparted by means of an electro-motor 41.

In the top part 5 of the vacuum chamber 2, 4, 5 a plate 42 is pivotally mounted which is adapted to be elevated when the part 5 is empty by means of a weighted body 45 suspended from a rope 43 guided on rolls 44. The rope 43 is provided with a current reversing switch 46 by means of which the electro-motor 41 may be operated in one or the other direction, according as the plate 42 is held downwardly by the grain bearing thereon or directed upwardly when there is no grain within the part 5 of the vacuum chamber. When the grain is delivered from the part 5 of the plate 42 is lifted by the weighted body 45, the position of the switch 46 is reversed, and the electro-motor 41 is likewise reversed for moving the valves 15 and 16 downwardly, so that a new supply of grain flows from the container 6 into the section 5 of the vacuum chamber 2, 4, 5 and the dried grain flows from the lower part 2 of the vacuum chamber into the delivery chamber 47 from which it is removed by means of a screw conveyor 48.

After the top part 5 of the vacuum chamber has been filled completely or in part the plate 42 is directed downwardly, the weighted body 45 is elevated, and the switch 46 is reversed, so that now the stem 35 and the valves 15 and 16 are lifted and the chambers controlled thereby are closed.

The grain moving downwardly from the part 5 drizzles through the radiator 17 while being heated, and it is delivered through the slits of the hoppers 24 which are opened sufficiently by means of the gates 25, and into the bottom part 2 of the vacuum chamber.

The continuous and uniform flow of the grain through the radiator and the degree of drying of the grain within the heating chamber 17 depend on the position of the gates 25 controlled by the hand wheel 27.

In Fig. 6 I have shown a modification in which subsidiary chambers 50 and 51 are provided respectively between the upper chamber 6^1 and the vacuum chamber 2^1, 4^1, 5^1, and between the said vacuum chamber and the chamber 47^1 provided at the bottom of the apparatus. The upper chamber 50 is closed as against the vacuum chamber 2^1, 4^1, 5^1 by its bottom 52 and a valve 54 closing an opening 53 of the said bottom. The chamber 51 which is located below the vacuum chamber 2^1, 4^1, 5^1 is formed with a conical bottom 55 having an opening 56 normally closed by a valve 57. The chambers 50 and 51 are formed at their sides with tubular studs 58 and 59 respectively by means of which they are connected to an evacuating device such as an air pump. The object is to permit the grain to be supplied to the vacuum chamber and to be removed therefrom after drying without any access of outer air to the vacuum chamber. The grain which has passed from the supply chamber 6^1 and through the subsidiary chamber 50 into the vacuum chamber is closed as against the outer air while it is within the chamber 50, and the said chamber is evacuated, so that practically no air is carried into the vacuum chamber when the grain passes into the same. The chamber 51 is evacuated after air has got into the same by the valve 57 being opened

for the purpose of removing the grain from the chamber 51, so that no air gets into the vacuum chamber 2^1, 4^1, 5^1 when the dried grain is delivered therefrom into the chamber 51. The chambers 50 and 51 are small in size as compared to the vacuum chamber 2^1, 4^1, 5^1, and therefore the air contained therein can be readily removed. Therefore the vacuum chamber can be filled and emptied in rapid succession.

The valves 15^1 and 57 are simultaneously opened and closed while the valves 54 and 16^1 are in closed position, while the valves 54 and 16^1 are opened while the valves 15^1 and 57 are in closed position. Hydraulic means have been provided for operating the valves 15^1, 54, 16^1 and 57. As shown the valves are connected respectively with piston rods 58^1, 59^1, 60 and 61 and pistons 62, 63, 64, and 65, the said pistons being located in cylinders 66, 67, 68, and 69. To each of the said cylinders two pipes are connected, one of the pipes 70, 72, 74, and 76 being connected to the top parts of the said cylinders and the other pipes 71, 73, 75, and 77 to the bottom parts thereof. The pipe 70 is connected with the pipe 77, and at their joint the said pipes are connected by a pipe 78 with a valve 79. The pipes 71 and 76 are connected with the valve 79 through a short pipe 80. The pipe 72 is connected with the pipe 75, and both pipes are connected by a pipe 81 with a valve 82. The pipe 73 is connected with the pipe 74, and both pipes are connected with the valve 82 by a pipe 83. The valves 82 and 79 are symmetrical in construction, and they are connected with each other by a pipe 84 and with a container 86 of pressure fluid through a pipe 85. The pressure fluid from the said container is conveyed through a pipe 87 into a pump 88 the pressure chamber of which is connected by a pipe 89 with two branch pipes 90 and 91 connected with the valves 79 and 82. The pipes 83 and 91 are connected to the casing of the valve 82 within a transverse plane, and the pipes 81 and 84 are connected to the said valve 82 within another plane. The said valve comprises a rotary plug 92 which is adapted to be rotated only through an angle of 90°, and which comprises two passages 93 and 94. The passage 93 is located in the plane of the pipes 83 and 91, and the passage 94 is located in the plane of the pipes 84 and 81. Between the passages 93 and 94 a short groove 95 is made in the circumferential wall of the valve plug 92. From the pipe 91 a pipe 96 is branched off which opens into the valve casing 82 in the plane of the pipes 81 and 84, the said branch pipe being connected to the casing 82 at the rear of the point where the pipe 83 opens into the valve casing 82. From the pipe 83 a pipe 97 is branched off which opens into the casing 82 at the rear of the plane of the pipes 81 and 84. At the rear of the opening of the said branch pipe 97 a branch pipe 98 opens into the valve casing, which branch pipe is connected with the pipe 84.

To the stem 99 of the plug 92 of the valve 82 a crank 100 is fixed (Fig. 6) which carries a pin 101 engaging in a longitudinal slot 102 of a rod 103. The said rod is acted upon by two springs 104 and 105 supported on a frame 106. The said rod 103 is further acted upon by two electromagnets 107 and 108 the terminals of which are connected by leads to a contact drum 109. The said contact drum is adapted to be rotated through the intermediary of a gear wheel 110 and a pinion 112 from an electro-motor 111. To the said drum 109 two contacts 113 and 114 are fixed (Fig. 12) which cooperate respectively with brushes 115 connected with the winding of the electromagnet 107 and brushes 116 connected with the winding of the electromagnet 108. By the contact strip 113 a circuit including a lead 117 is closed, so that the electromagnet 107 is energized and the cock 92 of the valve 82 is turned through the intermediary of the rod 103 from the median position in which the pipes 83, 91 and 81, 84 are disconnected into the position shown in Fig. 9 in which pressure fluid is passed from the supply pipe 91, the passage 93, the pipe 83 and the pipe 73 below the piston 63 of the valve 54, thus elevating the said valve upwardly and into a position in which the grain from the vacuum chamber 50 flows into the upper part 5^1 of the vacuum chamber 2^1, 4^1, 5^1. Simultaneously pressure fluid flows through the pipe 74 into the cylinder 68 above the piston 64 thereof, thus pulling the valve 16^1 downwardly and permitting the dried grain from the lower part 2^1 of the vacuum chamber to flow into the chamber 51. It will be understood that both chambers 50 and 51 are evacuated. The pressure fluid which is above the piston 63 of the valve 54 is delivered through the pipes 72 and 81, the passage 94, and the passages 84, 85 into the pressure fluid container 86. The pressure fluid which is below the piston 64 likewise flows through the pipes 75 and 81, passage 94, the pipes 84 and 85 into the pressure fluid container 86. Upon further rotary movement of the contact drum 109 the contact strip 114 connects the brushes 116. Thus the electromagnet 108 is energized, whereby the rod 103 is pulled upwardly and the valve plug 92 is turned into the position shown in Fig. 10. In this position the pressure fluid supplied from the pump 88 through the pipes 89 and 91 flows through the branch pipe 96 and the passage 94 into the pipe 81 and from the said pipe through the pipe 72 into the cylindrical chamber above the piston 63 of the valve 54 thus closing the said valve. The passage 93 is closed at its end. Simultaneously the pressure fluid flows through the pipe 75 into the cylindrical chamber below the piston 64 of the valve 16^1 and closes the said valve. In both cases the expelled pressure fluid flows through the pipes 73, 74, 83, the branch pipe 97, the groove 95, the branch pipes 98, the pipes 84, 85, and finally into the pressure fluid container 86. Therefore the vacuum chamber 2^1, 4^1, 5^1 is again closed as against the chambers 52 and 51. After the contact strip 114 has passed the brushes 116 the springs 104, 105 return the rod 103 of the valve 82 into initial position.

The valves 15^1 and 57 are controlled by the valve 79 which is operated in the same way as the valve 82, the valves 79 and 82 being symmetrical to each other. The valve 79 is likewise electrically controlled by means of contact strips mounted on a drum 118. The said drum is likewise rotated by the pinion 112 of the motor 111.

The electromotor 111 and an electromotor 119 connected with the pump 88 are controlled by a switch 120 which is operated by a hinged plate 42^1 through the intermediary of the rope 43^1 and the weighted body 45^1. When the said weighted body 45^1 is in elevated position the circuit of the motors 119 and 111 is closed. But when the said weighted body 45^1 moves downwardly the circuit is closed.

Between the shaft of the electromotor 111 and the pinion 112 there is a clutch of known construction which upon a supply of current to the motor permits only one rotation of the drums 109 and 118.

In the construction of the apparatus shown in Fig. 6 in lieu of the valves 15¹ and 54 cylindrical slide valves may be provided, as is shown in Fig. 13.

In the opening 13¹ of the bottom 12¹ and in the opening 53¹ of the bottom 52¹ a cylindrical slide 121 is mounted which is fixed to the rod 35¹ extending through the apparatus. This cylindrical slide 121 is formed with passages 123 separated from one another by ribs 122, and the grain may be supplied from the chamber located above the bottom 12¹ through the said passages and into the chamber 50¹ when the cylindrical slide is in its lowermost position. At its bottom end the slide 121 is formed with passages 124 through which the grain contained within the chamber 50¹ gets into the upper part 5² of the vacuum chamber when the cylindrical slide 121 is in the elevated position shown in Fig. 13. The cylindrical slide 121 is guided in sleeves 125 and 126 fixed respectively to the bottoms 12¹ and 52¹. To the upper bottom 12¹ a cap 127 is fixed by means of ribs 128, which cap covers the cylindrical slide and the passages 123 thereof when the cylindrical slide is not in its lowermost position. The delivery of the dried grain from the vacuum chamber and the subsidiary chamber located below the same may be controlled by a cylindrical slide 121 which may likewise be fixed to the rod 35¹, the construction of the said cylindrical slide 121 being symmetrical to that of the slide just described.

Also in this case by providing the subsidiary chambers 50 and 51 the material to be dried and the dried material may be supplied and removed at short intervals of time without the vacuum within the vacuum chamber 2¹, 4¹, 5¹ being broken.

I claim:

1. An apparatus for drying grain, comprising an upright shaft having a grain supplying chamber near its top, a grain delivering chamber near its bottom, a vacuum chamber intermediate the said top and bottom chambers, evacuating means for said vacuum chamber, means for opening and closing said vacuum chamber relatively to said supplying chamber, the said vacuum chamber comprising three sections located one above the other and continuously communicating with one another, and heating means for the intermediate section, the uppermost section being constructed for storing the grain, the intermediate section for evaporating the humidity of the grain, and the lowermost section for continuously receiving the dried material from the intermediate section, and automatic intermittently-acting means for supplying the grain to be dried and for causing the dried grain to be delivered from said lowermost section in which said opening and closing means and said intermittently-operating means each comprises a cylindrical vertically movable slide valve.

2. An apparatus as claimed in claim 1, in which the said shaft is provided with additional chambers one located between the said grain supplying chamber and said vacuum chamber and the other one between the said vacuum chamber and lowermost chamber, and in which means are provided for evacuating the said additional chambers and connecting and disconnecting the same with the adjacent chambers located respectively above and below the same.

3. An apparatus for drying grain, comprising an upright shaft having a grain supplying chamber near its top, a grain delivering chamber near its bottom, a vacuum chamber intermediate the said top and bottom chambers, evacuating means for said vacuum chamber, means for opening and closing said vacuum chamber relatively to said supplying chamber, the said vacuum chamber comprising three sections located one above the other and continuously communicating with one another, and heating means for the intermediate section, the uppermost section being constructed for storing the grain, the intermediate section for evaporating the humidity of the grain, and the lowermost section for continuously receiving the dried material from the intermediate section, and automatic intermittently-acting means for supplying the grain to be dried and causing the dried grain to be delivered from said lowermost section, and means controlled by the grain within the said storage chamber for operating said opening and closing means and said means for supplying the grain to be dried and causing the dried grain to be delivered from said lowermost chamber.

4. An apparatus for drying grain, comprising an upright shaft having a grain supplying chamber near its top, a grain delivering chamber near its bottom, a vacuum chamber intermediate the said top and bottom chambers, evacuating means for said vacuum chamber, means for opening and closing said vacuum chamber relatively to said supplying chamber, the said vacuum chamber comprising three sections located one above the other and continuously communicating with one another, and heating means for the intermediate section, the uppermost section being constructed for storing the grain, the intermediate section for evaporating the humidity of the grain, and the lowermost section for continuously receiving the dried material from the intermediate section, and automatic intermittently-acting means for supplying the grain to be dried and causing the dried grain to be delivered from said lowermost section, in which hydraulically operating means are provided for said opening and closing means.

5. An apparatus for drying grain, comprising an upright shaft having a grain receiving chamber near its top, a grain delivering chamber near its bottom, a vacuum and heating chamber intermediate the said chambers, subsidiary chambers located respectively between said receiving and vacuum chambers and between said vacuum and delivering chambers, means for opening and closing said subsidiary chambers relatively to said vacuum chamber and said receiving and delivering chambers respectively, means for heating and evacuating said vacuum and heating chamber, operating means for said opening and closing means including means for opening and closing the said subsidiary chambers each comprising a cylindrical vertically movable slide valve.

6. A drying apparatus comprising an upright shaft, having a vacuum chamber, a storage chamber above the vacuum chamber, said storage chamber having an aperture in its bottom, a valve in said aperture, said valve having a conical skirt portion for scattering the material fed into the vacuum chamber, and means for opening and closing the valve.

7. A device as in claim 6, said vacuum chamber including a storage section, a drying section below the storage section arranged to permit the material under treatment to flow only slowly therethrough, said valve-moving means including a motor, and means controlled by the grain in said storage section for controlling the action of the motor.

8. In a drying apparatus, an upright shaft comprising a series of superposed chambers each having a downwardly tapered bottom with a

central aperture, a valve in each such aperture, each valve having a conical form, and common means for moving said valves up and down to open and close said apertures.

9. A drying apparatus comprising an upright shaft, said shaft having a vacuum chamber, a storage chamber above the vacuum chamber, said storage chamber having an aperture in its bottom, a valve in said aperture, said vacuum chamber including a drying section, a storage section above the drying section, and means for operating the valve including a member in said storage section arranged to be held by the material in the said section.

10. In a drying apparatus, an upright shaft comprising a series of superposed chambers with apertures at the bottom, including a vacuum chamber divided into an upper storage section, an intermediate drying section, and a lower receiving section, valves for said apertures, and common means for opening and closing said valves including an electric motor controlled by material in said upper storage section for operating said switch.

11. In a drier for grain and the like, a shaft having a vacuum chamber divided into an upper storage section, an intermediate drying section and a lower receiving section, a receiving chamber above said vacuum chamber, valves respectively controlling the outlet from said lower receiving section and a passage between said receiving chamber and said storage section, a rod connected to said valves, an electric motor arranged to raise and lower said rod for opening and closing said valves, and a reversing switch for said motor, said switch being controlled by the material in said storage section.

12. In a drier for grain and the like, a shaft having a vacuum chamber divided into an upper storage section, an intermediate drying section and a lower receiving section, a receiving chamber above said vacuum chamber, a rod extending through said shaft, valves operable by said rod for controlling respectively the outlet from said lower receiving section and a passage leading from said receiving chamber to said vacuum chamber, a nut threaded on said rod, an electric motor for turning said nut, a reversing switch for said motor and means controlled by the material in said storage section for operating said switch.

13. In a drier for grain and the like, a shaft having a vacuum chamber divided into an upper storage section, an intermediate drying section and a lower receiving section, a receiving chamber above said vacuum chamber, auxiliary vacuum chambers respectively below said lower receiving section, and between said receiving chamber, and said upper storage section, ports at the bottom of each chamber, a rod extending through said shaft, valves for said ports operable by movement of said rod to control the passage of material through said drier, an electric motor for actuating said rod, a reversing switch for said motor, and means controlled by the presence or absence of material in said upper storage chamber for operating said switch.

14. In a drier for grain and the like, a shaft having a vacuum chamber divided into an upper storage section, an intermediate drying section arranged to permit the material under treatment to flow only slowly therethrough and a lower receiving section, a receiving chamber above said vacuum chamber, auxiliary vacuum chambers respectively below said lower receiving section and between said receiving chamber and said upper storage sections, ports at the bottom of each chamber, a conical valve in each such port, and common means for moving said valves up and down to open and close said ports, including an electric motor for actuating said valve-moving means, and a switch for said motor, the said switch being arranged to be opened by the presence of material in said upper storage section.

15. An apparatus for drying grain, comprising an upright shaft having a grain receiving chamber near its top, a grain delivering chamber near its bottom, a vacuum and heating chamber intermediate the said chambers, subsidiary chambers located respectively between said receiving and vacuum chambers and between said vacuum and delivering chambers, means for opening and closing said subsidiary chambers relatively to said vacuum chamber and said receiving and delivering chambers respectively, means for heating and evacuating said vacuum and heating chamber, means for evacuating said subsidiary chambers, operating means for said opening and closing means, said vacuum chamber including a storage section, a drying section below the storage section arranged to permit the material under treatment to flow only slowly therethrough, said valve-moving means including a motor, and means controlled by the weight of grain in said storage section for controlling the action of the motor.

KARL DIENST.