(No Model.)

A. V. WHITEMAN.

STOPPER OR COVER FOR BOTTLES OR JARS.

No. 275,101. Patented Apr. 3, 1883.

Fig. 1.

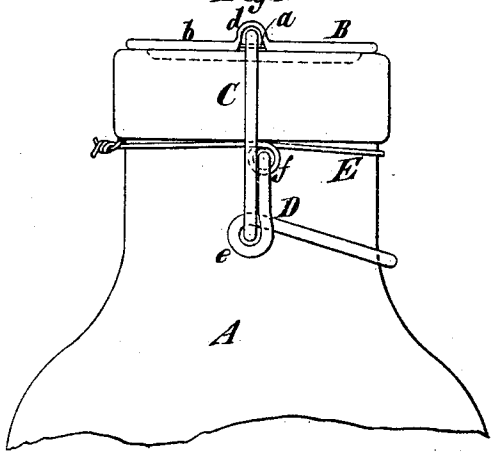

Fig. 4.

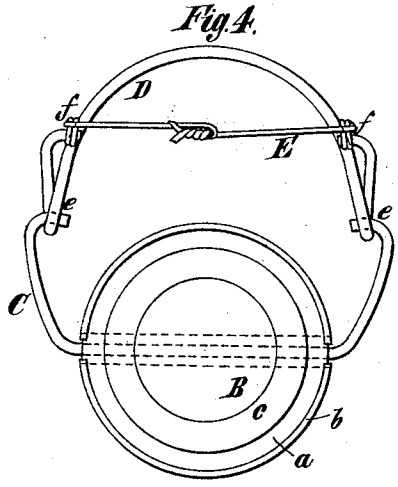

Fig. 2.

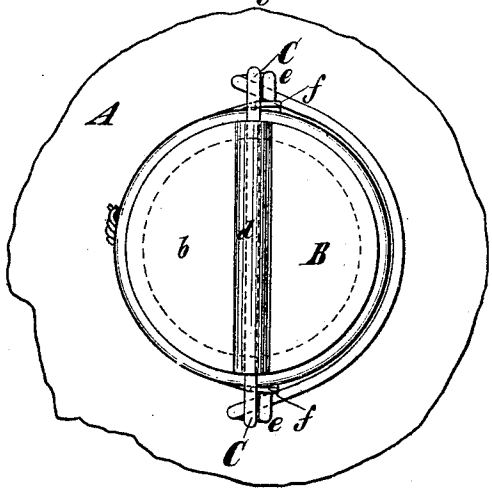

Fig. 3.

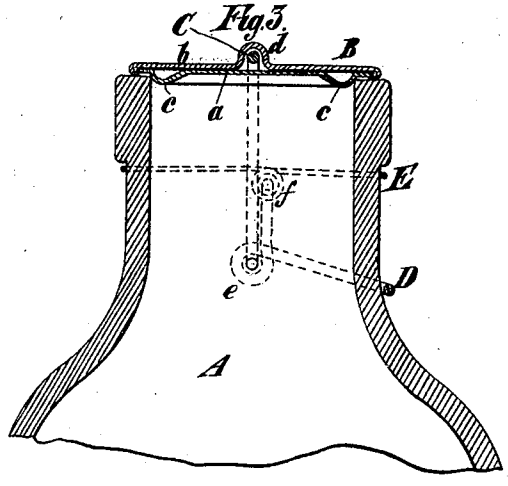

Witnesses:
James R. Bowen.
T. L. Keane

Inventor:
Abram V. Whiteman,
by his attorney,
Edwin H. Brown.

N. PETERS. Photo-Lithographer, Washington, D. C.

UNITED STATES PATENT OFFICE.

ABRAM V. WHITEMAN, OF NEW YORK, N. Y.

STOPPER OR COVER FOR BOTTLES OR JARS.

SPECIFICATION forming part of Letters Patent No. 275,101, dated April 3, 1883.

Application filed October 21, 1882. (No model.)

To all whom it may concern:

Be it known that I, ABRAM V. WHITEMAN, of New York, in the county of New York and State of New York, have invented a certain new and useful Improvement in Stoppers or Covers for Bottles or Jars, of which the following is a specification.

This improvement consists in a stopper for a bottle or jar, composed of two pieces or thicknesses of sheet metal fitting snugly together and having their edges overlapped, one provided with a downwardly-extending annular rim or projection adapted to fit within the mouth of the bottle or jar, and the other having an arched or bent-up portion extending upwardly from it for the reception of the bail, as more fully hereinafter described.

In the accompanying drawings, Figure 1 is a side view of the upper part of a bottle or jar provided with a cover or stopper embodying my invention. Fig. 2 is a plan or top view thereof. Fig. 3 is a central vertical section of the same; and Fig. 4 is a side view of the cover or stopper and its appurtenances detached from the bottle or jar.

Similar letters of reference designate corresponding parts in all the figures.

A designates a bottle or jar, made of glass or other vitreous or silicious material.

B designates a stopper or cover for the mouth of such bottle or jar. As shown, it is composed of two parts, *a b*, of sheet metal. The part *a* has an annular rim or projection, *c*, which fits in the mouth of the bottle or jar, and the part *b* is bent or arched, as at *d*, to accommodate a bail, C, and has its edges bent over the edges of the part *a* to secure it thereto. The ends of the bail C are pivoted in eyes *e*, formed in a bell-crank lever, D, which is made of stout wire and fits against the neck of the bottle or jar. The ends of this bell-crank lever D are pivoted in eyes *f*, formed in a fine wire, E, which is wrapped around the exterior of the neck of the bottle or jar, and is fastened by having its ends twisted together. When the downwardly-extending portions of the bell-crank lever D are pushed back the cover or stopper B is released and may be swung off the mouth of the bottle or jar. After the stopper or cover is swung into place the downwardly-extending portions of the bell-crank lever are pushed forward and the stopper or cover is secured in place in the mouth of the bottle or jar. A packing of india-rubber, card, paper, or other suitable material will preferably be fitted to the under side of the cover or stopper outside its rim or projection *c*.

The cover or stopper thus formed is simple, cheap, and durable, and of such neat appearance that it surpasses all the covers or stoppers commonly in use.

My stopper is very desirable for many reasons. It can be made cheaply, and is neat in appearance. It does not occupy much space inside the mouth of the bottle or jar, and projects very little above it. It is made of indestructible material, and when thrown over against the jar it will not break or be liable to break the jar.

What I claim as my invention, and desire to secure by Letters Patent, is—

A stopper for a bottle or jar, composed of two pieces or thicknesses of sheet metal fitting snugly together and having their edges overlapped, one provided with a downwardly-extending annular rim or projection adapted to fit within the mouth of the bottle or jar, and the other having an arched or bent-up portion extending upwardly from it for the reception of the bail, substantially as specified.

ABRAM V. WHITEMAN.

Witnesses:

T. J. KEANE,

JAMES R. BOWEN.