(No Model.)

P. W. DEACON & A. TIMPE.

CYCLIST'S POUCH.

No. 605,308. Patented June 7, 1898.

FIG. 1.

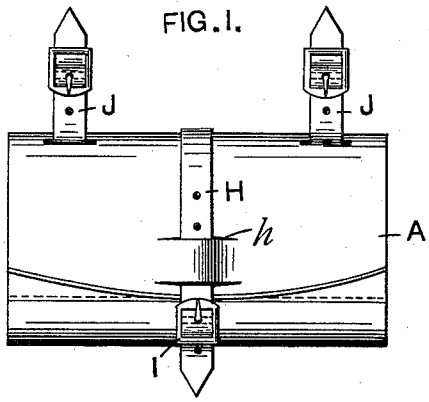

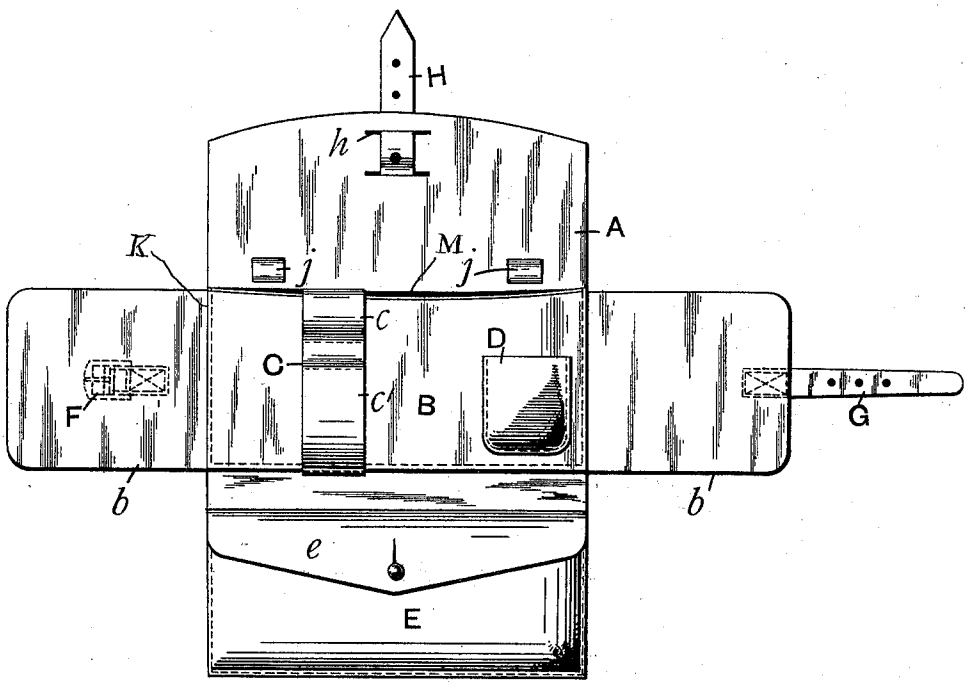

FIG. 2.

Witnesses:
Geo. M. Copenhaver.
W. M. Fairfax

Inventors:
Adolf Timpe
Percy W. Deacon
by G. H. Stockbridge
their attorney

THE NORRIS PETERS CO., PHOTO-LITHO., WASHINGTON, D. C.

UNITED STATES PATENT OFFICE.

PERCY WAGSTAFF DEACON AND ADOLF TIMPE, OF MANCHESTER, ENGLAND.

CYCLIST'S POUCH.

SPECIFICATION forming part of Letters Patent No. 605,308, dated June 7, 1898.

Application filed December 30, 1896. Serial No. 617,435. (No model.) Patented in England June 13, 1896, No. 13,058.

To all whom it may concern:

Be it known that we, PERCY WAGSTAFF DEACON and ADOLF TIMPE, citizens of the United Kingdom of Great Britain and Ireland, residing at Manchester, in the county of Lancaster, England, have invented certain new and useful Improvements in Cyclists' Pouches, (for which we have obtained British Letters Patent No. 13,058, dated June 13, 1896,) of which the following is a specification.

This invention relates to cyclists' pouches or wallets especially designed according to this invention to more readily contain in a convenient arrangement such tools, appliances, and articles as the cyclist is likely to require on a journey and in such a manner that each of such articles is in a separate holder or receptacle.

We will describe our said invention with reference to the accompanying drawings, in which—

Figure 1 shows the pouch closed, and Fig. 2 represents it opened.

It consists of an oblong strip of leather A, which forms the outer part. Across this there is sewed or cemented another longer strip B, the ends of which form the flaps *b*. A third strip C is sewed or cemented upon B in such a manner as to form two loops *c c'*, and a pocket D is also sewed or cemented thereon. Below the cross-strip B there is a pocket E, preferably closable by the flap *e* for the better protection of articles contained therein. The flaps of the cross-strip are provided with a buckle F and strap G, by means of which they may be securely connected when folded over the central part, as when the pouch is closed. Outside the pouch there is another strap H and buckle I to hold the pouch closed when in that condition. There are also means for attaching the pouch to the machine, such as the straps and buckles J J. The strap H may be prevented from moving laterally by making two slits *h h* in the part A and passing the strap through these slits. The straps J J may also be connected with the pouch by passing each through two parallel slits *j j*.

The pouch represented by the drawings has been constructed to carry a monkey-wrench, the handle of which is passed through the loop *c*, an oil-can, which is held in the loop *c'*, and a box to contain appliances for patching punctures in pneumatic tires in the pocket D. The pocket E may be utilized for carrying a sponge-cloth or duster, needles and thread, and other articles which may be likely to be wanted. It will be understood that the holders *c c'* and D may be differently constructed, proportioned, and arranged, according to the nature of the tools and articles required to be carried.

When the hereinbefore-described pouch is used, it will be obvious, when the pouch is open, whether or not all the tools and articles required are present or not, their absence being indicated by a vacant place or places.

These pouches can be produced with a minimum of labor and have therefore the advantage that they can be produced at very low prices. Every article being separately held there is no rattling or rubbing between them in the pouch. An additional pocket may be formed with advantage and without trouble by sewing the cross-strip B upon the base A on three sides only, as indicated by the line of stitching K. The mouth of this pocket is indicated at M. It is more especially useful for ladies and may be employed to contain hat-pins, hair-pins, needles, a handkerchief, or other like articles.

Having now particularly described and ascertained the nature of our said invention and in what manner the same is to be performed, we declare that what we claim is—

A cyclist's pouch consisting of and comprising an oblong strip of leather forming the outer part of the pouch, a transverse strip sewed thereon in such a manner as to produce a pocket between the two strips, holders or receptacles on the transverse strip such as *c c'* and D, flaps on the transverse strip to fold over said holders, and a pocket E formed on the lower part of the outer oblong strip which folds over at each end above the flaps of the transverse strip, together with straps and buckles for securing the pouch and for attaching it to the machine.

In testimony that we claim the foregoing as our invention we have signed our names, in presence of two witnesses, this 10th day of December, 1896.

PERCY WAGSTAFF DEACON.
ADOLF TIMPE.

Witnesses:
ARTHUR MILLWARD,
WILLIAM E. KEYS.