Feb. 22, 1955 A. B. KENNISON ET AL 2,702,627

PACKAGING AND HANDLING SUTURES

Filed Jan. 6, 1953

Fig. 1.

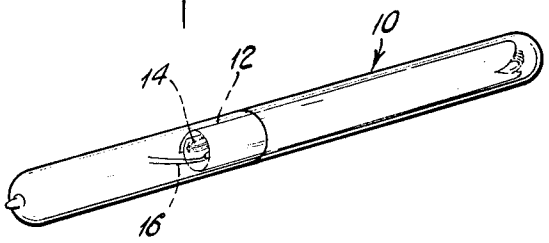

Fig. 2.

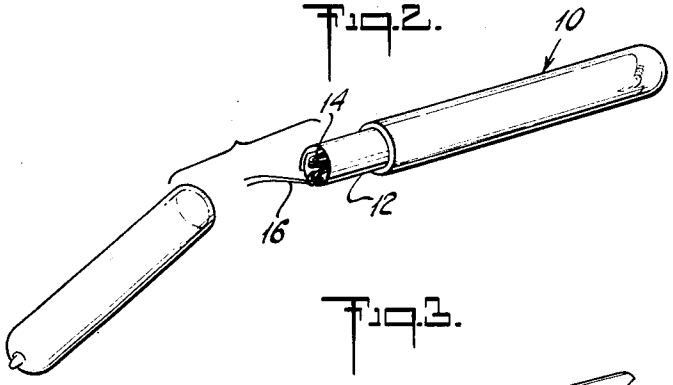

Fig. 3.

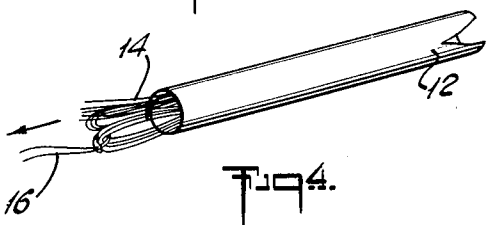

Fig. 4.

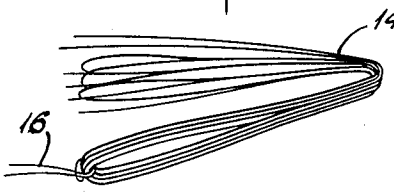

Fig. 5.

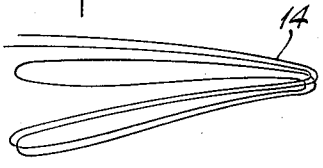

Fig. 6.

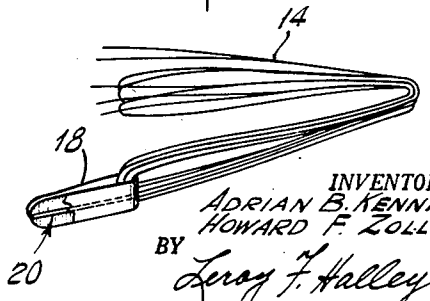

INVENTORS:
ADRIAN B. KENNISON
HOWARD F. ZOLLER
BY
Leroy F. Halley
ATTORNEY

United States Patent Office 2,702,627 Patented Feb. 22, 1955

2,702,627

PACKAGING AND HANDLING SUTURES

Adrian B. Kennison, Plainfield, and Howard F. Zoller, North Plainfield, N. J., assignors to Ethicon Suture Laboratories Incorporated, a corporation of New Jersey

Application January 6, 1953, Serial No. 329,824

2 Claims. (Cl. 206—63.3)

This invention relates to a package of sutures in which a plurality of folded sterile sutures is sealed in a container and more particularly in a sealed glass tube. It is understood that sutures are used under circumstances different from ligatures, but the word "suture" will be used hereinafter as a matter of convenience to indicate either sutures or ligatures.

Textile suture materials such as silk, cotton, nylon, linen, and others have been packaged and supplied to the surgeon in the form of a continuous strand on a spool; and although such practice has achieved acceptance by the surgical profession, certain disadvantages are inherent therein. It has been necessary to sterilize a spool of such material or to remove and cut the strand into lengths before sterilization. This is time-consuming, inefficient, and wasteful because unused cut lengths of suture material are frequently discarded. The sterilization of a whole spool of textile suture material followed by the cutting in the operating room of definite lengths from the spool is inconvenient since it adds another detail to the already complicated procedure of an operating room.

An object of this invention is to provide an inexpensive, simple hermetically sealed package containing a plurality of sutures quickly and easily removable from the container.

Another object of this invention is to provide a hermetically sealed package containing a plurality of folded sutures from which individual strands may be removed with a minimum of entanglement and snarling of the sutures.

A further object of this invention is to provide a hermetically sealed package containing a plurality of folded sutures in which the straightening of and the removal of folds and kinks from the sutures as well as the retention of the sutures as a group, and the prevention of the separation of single strands from each other is facilitated.

These and other objects and advantages of the invention will be apparent from the following description and the accompanying drawing in which similar characters of reference indicate similar parts throughout the several views.

Referring to the drawing:

Figure 1 is a view in perspective of a hermetically sealed glass tube containing a plurality of folded sutures encased within a protecting jacket.

Figure 2 is a view in perspective of a broken suture tube illustrating separation of the tube sections and the relative position of the folded sutures and encasing jacket as well as the binding means.

Figure 3 is a view in perspective illustrating a plurality of folded sutures secured together and encased by a protecting jacket.

Figure 4 is a view in perspective illustrating one method of folding a plurality of sutures prior to their insertion into a suture tube and showing one means of securing the sutures together.

Figure 5 is a view in perspective of a single folded suture strand illustrating one manner in which an individual strand may be folded.

Figure 6 is a view in perspective of a plurality of folded sutures and illustrating a preferred means of securing the sutures together.

This invention consists broadly of a hermetically sealed container containing a plurality of folded sutures, in which the sutures are held together by a binding means

which affords a means for withdrawing the sutures from the container and facilitates straightening the folded sutures and the consecutive removal of individual strands from the group of sutures. In one embodiment of the invention the individual suture strands may have a surgical needle secured to one or each end.

Referring now more specifically to the drawings, a plurality of sutures **14** such as strands of silk, gut, cotton, linen, nylon and the like are encased within a jacket **12** made of heavy paper or similar material whose length is approximately the length of the folded sutures. The purpose of the jacket **12** is to protect the sutures from cutting and fraying when the tube is broken. The sutures, having a length of from about 12 to 30 or more inches, are folded a number of times, depending upon their initial lengths, so that they may be inserted within a glass tube **10** which is about 3 to 5 inches in length. Generally, the overall length of the folded sutures is somewhat greater than one-half the length of the glass tube. One of the preferred methods of folding is shown in Figure 4 and consists of folding the group of sutures by doubling them back upon themselves as many times as is necessary to provide the desired overall length. This method is more clearly illustrated in Figure 5 which shows an individual folded suture strand.

Prior to folding, the sutures are aligned with their ends about even and loosely secured at approximately the midpoint of their lengths by a tie **16** or tab **18** looped around the suture group. Although the tie or tab is positioned at the approximate midpoint of the length of the sutures, it is apparent that it may be located in other positions. When each suture strand has a needle attached to at least one end, the suture strands are preferably arranged with the needles in juxtaposition, the group of strands folded adjacent to the needles and the binding means positioned at the fold adjacent to the needles. The tie, which may be constructed of the same material as the sutures themselves or from any other textile material such as cotton, linen, nylon or the like, has extending ends which are sufficiently long to be grasped by the fingers. It is preferred that the tie or tab, when the plurality of sutures have been folded the requisite number of times, be positioned at one end of the group of folded sutures. The tie, as shown in the drawings, is looped around the suture group in a simple knot; other looping and knotting arrangements which loosely secure the group of sutures and permit withdrawal of individual strands may also be used. Regardless of how the sutures are folded or wherever the tie or tab is positioned, it is desirable that the ends of the tie or tab be readily accessible when the suture tube is broken. As illustrated in Figures 1 and 2, the ends of the tie extend beyond the end of encasing jacket **12** and are readily accessible.

In the preferred embodiment of the invention, the sutures are loosely bound and secured by a tab **18** having extending ends sufficiently long to be grasped by the fingers. The tab may be constructed of aluminum or plastic or the like substantially inelastic material. Alternatively, the tab may be constructed, as illustrated in Fig. 6, of a fairly heavy paper having a centrally located strand of wire **20** to give rigidity. The width of the tab is less than the internal diameter of the glass tube within which it is to be inserted. Such a tab may have printed on it the size, type and length of the sutures.

As shown in the drawings, it is preferred that the binding means have two extending ends sufficiently long to be grasped by the fingers. A binding means having one extending end is equally suitable, providing it secures the suture group as a unit and permits withdrawal of individual strands from the group and in this instance one end may be secured to the surface of the extending end by adhesion, stapling or other means.

The tube may or may not contain a tubing fluid such as xylene or alcohol and is usually provided with a scored groove on the outer surface at approximately the midpoint of its length to assist in breaking the tube.

To remove the sutures from the tube, the sutures are positioned so that the end of the suture group opposite the end secured by the tie is in contact with the tube end, the tube is broken along the scored line on its sur-

face and the extending ends of the tie or tab are grasped and the group of sutures is withdrawn as a unit from the tube segment. Folds and kinks may be readily removed from the sutures by passing them between the thumb and forefinger of one hand while holding the tie or tab in the other hand and this provides a group of sutures folded and secured together substantially at their midsection from which individual strands may be readily removed without entanglement of the remaining strands.

Although the description of the hermetically sealed container containing a plurality of folded sutures has been particularly directed to the modification in which the container is a hermetically sealed glass tube, it is also contemplated that the container may be fabricated of rigid, semirigid, or nonrigid, nonvitreous materials including: cellolosic substances, such as paper, which may be coated to decrease permeability and assist in maintaining sterility; polymeric plastic materials, particularly of the thermoplastic type, such as polyethylenes, trifluorochloroethylene polymers, polyvinylchloride, copolymers of polyvinylchloride and polyvinylacetate or polyvinylbutyrate, which are heat sealable and available in transparent or translucent tubes and sheets; or resins, principally of a rigid or semirigid type such as polymers of esters of acrylic acid and substituted acrylic acids such as methylacrylic acid and particularly methylmethacrylate polymers. It is also contemplated that the container may be fabricated of a thermoplastic or nonthermoplastic resin and be hermetically sealed by adhesive means. In all instances where nonvitreous materials of the above type are used in fabricating a container, it is necessary that the material from which the container is made be resistant to the usual sterilizing liquids and to sterilizing temperatures. Containers of the nonvitreous type may be tubular in shape and sealed at each end or may be in the form of sealed envelopes.

Since the suture package is sterilized before use, it is apparent that the materials from which the container, tie, tab, and jacket are made must be capable of withstanding sterilization. It is equally apparent that they must also be compatible with any tubing fluid present in the container.

While the invention has been shown and described to some degree with particularity and reference to specific embodiments, it is nevertheless to be understood that the invention is not to be limited to any of the specific embodiments described and illustrated, but is to be construed broadly and restricted only by the scope of the appended claims.

What is claimed is:

1. A hermetically sealed glass tube containing a plurality of textile sutures folded at least once and substantially encircled by and unattached to a protecting jacket of approximately the length of the folded sutures; the sutures being loosely tied as a group by a strand approximately at a fold, said strand having ends extending from the group of sutures, the group of sutures being readily removable from the opened glass tube and from the protecting jacket, and intact, individual sutures being removable successively from the group.

2. A hermetically sealed glass tube containing a plurality of textile sutures folded at least once and substantially encircled by and unattached to a protecting jacket of approximately the length of the folded sutures; the sutures being loosely secured as a group by a tab approximately at a fold, said tab having ends extending from the group of sutures, the group of sutures being readily removable from the opened glass tube and from the protecting jacket, and intact, individual sutures being removable successively from the group.

References Cited in the file of this patent

UNITED STATES PATENTS

634,235	Fishback	Oct. 3, 1899
2,470,494	Kennison	May 17, 1949
2,617,523	Zoller	Nov. 11, 1952