(19) Europäisches Patentamt
European Patent Office
Office européen des brevets

(11) **EP 4 582 641 A1**

(12) **EUROPEAN PATENT APPLICATION**
published in accordance with Art. 153(4) EPC

(43) Date of publication:
09.07.2025 Bulletin 2025/28

(21) Application number: **23869877.3**

(22) Date of filing: **30.06.2023**

(51) International Patent Classification (IPC):
E03D 1/14 *(2006.01)*

(86) International application number:
PCT/CN2023/105275

(87) International publication number:
WO 2024/066629 (04.04.2024 Gazette 2024/14)

(84) Designated Contracting States:
AL AT BE BG CH CY CZ DE DK EE ES FI FR GB GR HR HU IE IS IT LI LT LU LV MC ME MK MT NL NO PL PT RO RS SE SI SK SM TR
Designated Extension States:
BA
Designated Validation States:
KH MA MD TN

(30) Priority: **29.09.2022 CN 202211200703**

(71) Applicant: **Jomoo Kitchen & Bath Deutschland GmbH**
80807 Munich (DE)

(72) Inventors:
- **LIN, Xiaofa**
  Quanzhou, Fujian 362300 (CN)
- **LIN, Xiaoshan**
  Quanzhou, Fujian 362300 (CN)
- **RICHTER, Thomas**
  80807 Munich (DE)
- **HELD, Klaus Michael**
  80807 Munich (DE)
- **HUANG, Xindi**
  80807 Munich (DE)

(74) Representative: **WSL Patentanwälte Partnerschaft mbB**
Kaiser-Friedrich-Ring 98
65185 Wiesbaden (DE)

(54) **TOILET DEVICE, FLUSHING SYSTEM AND FLUSHING METHOD THEREFOR**

(57) A toilet device (100), a flushing system (2) and a flushing method therefor. A control device (24) for the flushing system (2) controls the opening and closing of and opening and closing time of a first spray washing pipe (21) and a second spray washing pipe (22), and the emptying sequence of a toilet bowl (10), so as to form a plurality of flushing modes.

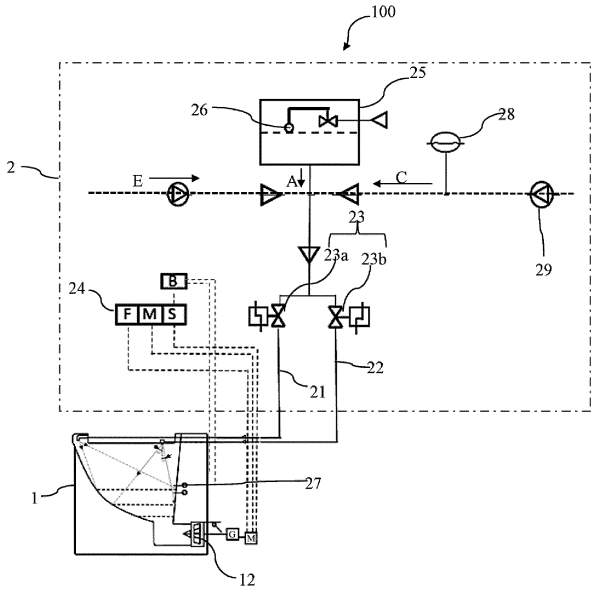

FIG. 1

Processed by Luminess, 75001 PARIS (FR)

Description

Technical Field

[0001] The present invention relates to, but is not limited to, the field of sanitary ware, and particularly relates to, but is not limited to, a toilet device, a flushing system, and a flushing method therefor.

Background

[0002] Flush toilets are a major contributor to a clean and healthy environment, and one of major drawbacks of flush toilets is long-term water usage. In the context of limited water resources and water supply interruptions caused by droughts or floods, better water-saving capacities of flush toilets need to be solved urgently.

[0003] Better water-saving capabilities of flush toilets are urgent in both developing and developed countries, because in the developed countries there is competition among needs of the industrial water, agricultural water, cleaning water, and water for personal use. As we all know, treatment of wastewater requires high investment in infrastructure, and the treatment process is costly, and in many cases it is difficult to establish infrastructure for sewer systems and treatment plants.

[0004] A flush toilet usually requires about 6 liters of water per flush of solids and liquids. In some cases, two different flush volumes are used for flushing the toilet, one for treating solids and feces (complete flush), and the other for flushing after the user urinates, that is, a half flush (or economical flush). It means that when the user uses the toilet to urinate, 3 liters of water will be drained every time the toilet is flushed. The cost of flushing toilets is very high. On the one hand, the wastewater after flushing needs to be treated. On the other hand, investment, operation and maintenance costs of sewer infrastructure also make the cleaning cost of sewers very high.

[0005] Due to the limited availability of drinking water, the industry is developing new technologies to reduce flushing water volumes or use non-drinking water for flushing toilets.

[0006] In some cases, a flushing technique is used for vacuum toilets, as is used in transportation systems such as trains and airplanes. On the ground, due to the high investment in generating vacuum and the high energy required to operate the system, widespread use of these systems on the ground has been hindered so far.

[0007] There are also new developments in mechanical "flushing", but the investment is high and the cleanliness is dependent on regular maintenance. Due to the different operating mode than flush toilets, user acceptance is low. These techniques also carry the potential of occasional failure of the odor barrier.

[0008] Another flushing technique is used in "marine toilets" in recreational shipping. They also have a small flush volume, but are much more difficult to use. For example, before using the toilet, the toilet bowl must be filled with water, such water volume must be evaluated by the user, and when urinating to defecating, the water needs to change from low to high filling volume. After use, the user must refill the water reservoir by pressing three buttons. The disadvantage of this system is that it depends on the correct operation of the user and the correct judgment of the timing of all the steps to be performed in the correct order. It means that each process is time-controlled and can only be continuously carried out at the push of a button. Another disadvantage is that users are accustomed to operating systems that flush up to two times after use rather than both before and after use.

Summary

[0009] The following is a summary of the subject matter described in detail herein. This summary is not intended to limit the protection scope of the claims.

[0010] An embodiment of the present disclosure provides a flushing system, including a first spray washing pipe and a second spray washing pipe, both of which are configured to be connected to a toilet bowl and supply water to the toilet bowl for flushing; an on-off assembly connected to the first spray washing pipe and the second spray washing pipe and configured to control opening and closing of the first spray washing pipe and the second spray washing pipe; and a control device electrically connected to the on-off assembly. The control device is configured to control the opening and closing of the first spray washing pipe and the second spray washing pipe, and a sequence between the opening and closing of the first spray washing pipe and the second spray washing pipe and emptying of the toilet bowl, so as to form a plurality of flushing modes.

[0011] The plurality of flushing modes includes at least one of a first flushing mode and a second flushing mode, and further includes a third flushing mode.

[0012] The first flushing mode is configured to open the first spray washing pipe or the second spray washing pipe after the emptying of the toilet bowl is completed. The second flushing mode is configured to open the first spray washing pipe before the emptying of the toilet bowl is started, and to open the first spray washing pipe or the second spray washing pipe after the emptying of the toilet bowl is completed. The third flushing mode is configured to open the first spray washing pipe

and the second spray washing pipe before the emptying of the toilet bowl is started, and to open the first spray washing pipe or the second spray washing pipe after the emptying of the toilet bowl is completed.

[0013] An embodiment of the present disclosure also provides a toilet device, including: a toilet body, and the flushing system according to any embodiment of the present disclosure, which is mounted in cooperation with the toilet body. The toilet body includes a toilet bowl, and the toilet bowl is provided with a first spray washing port and a second spray washing port. The first spray washing pipe and the second spray washing pipe of the flushing system are respectively mounted in cooperation with the first spray washing port and the second spray washing port.

[0014] An embodiment of the present disclosure also provides a flushing method for a flushing system. The flushing system according to any embodiment of the present disclosure is used for flushing, and the flushing method includes:

controlling the flushing system to be in any of a plurality of flushing modes according to different flushing commands received;

wherein the plurality of flushing modes include at least one of a first flushing mode and a second flushing mode, and further include a third flushing mode;

when the flushing system is in the first flushing mode, opening the first spray washing pipe or the second spray washing pipe after the emptying of the toilet bowl is completed;

when the flushing system is in the second flushing mode, opening the first spray washing pipe before the emptying of the toilet bowl is started, and opening the first spray washing pipe or the second spray washing pipe after the emptying of the toilet bowl is completed; and

when the flushing system is in the third flushing mode, opening the first spray washing pipe and the second spray washing pipe before the emptying of the toilet bowl is started, and opening the first spray washing pipe or the second spray washing pipe after the emptying of the toilet bowl is completed.

[0015] Other aspects will become apparent after reading and understanding the drawings and detailed description.

Brief Description of Drawings

[0016] The accompanying drawings are used to provide further understanding of the technical solutions of the present disclosure, and constitute a portion of the specification. They are used to explain the technical solutions of the present application together with the embodiments of the present disclosure and do not constitute a limitation on the technical solutions of the present application.

FIG. 1 is a schematic diagram of a toilet device according to an embodiment of the present disclosure;

FIG. 2 is a schematic diagram of a toilet body of the toilet device in FIG. 1;

FIG. 3 is a schematic top view of the toilet body in FIG. 2;

FIG. 4 is a schematic diagram of another implementation of a toilet body of a toilet device according to an embodiment of the present disclosure;

FIG. 5 is a schematic diagram of an integrated installation of a flushing system of a toilet device according to an embodiment of the present disclosure;

FIG. 6 is a simplified diagram of an internal structure of the flushing system of the toilet device after integrated installation according to the embodiment of the present disclosure; and

FIG. 7 is a flowchart of a flushing method for a flushing system according to an embodiment of the present disclosure.

Reference signs:

[0017] 100: toilet device, 1: toilet body, 10: toilet bowl, 11: foundation, 101: first spray washing port, 102: second spray washing port, 103: sewage discharge port, 1a: front end, 1b: rear end, 104: arc-shaped front portion, 105: arc-shaped rear slope portion, 106: water sealing zone, 105: rear slope portion, 12: suction device, 13: backflow prevention device, 14:

flange connector, 130: magnetic attraction element; 2: flushing system, 21: first spray washing pipe, 22: second spray washing pipe, 23: on-off assembly, 24: control device, 210: first nozzle, 2101: horizontal section, 2102: bent section, 220: second nozzle, 25: pressurizing device, 23a: first electric control valve, 23b: second electric control valve, 28: tank body, D: box body, 26: first liquid level sensor, 27: second liquid level sensor.

Detailed Description

[0018] A clear and complete description of the technical schemes of the embodiments of the present disclosure will be given below in conjunction with the accompanying drawings in the embodiments of the present disclosure, and it will be apparent that the described embodiments are only a portion, rather than all, of the embodiments of the present disclosure. Based on the embodiments of the present disclosure, all other embodiments obtained by those of ordinary skills in the art without making creative efforts fall within the protection scope of the present disclosure.

[0019] In addition, the technical solutions in different embodiments of the present disclosure can be combined with each other, but it needs to be based on the realization by those of ordinary skill in the art. When the combination of the technical solutions is contradictory or cannot be realized, it should be considered that the combination of the technical solutions does not exist and is not within the protection scope claimed by the present disclosure.

[0020] In the description of the present disclosure, it is to be understood that the orientations or position relationships indicated by the terms "center", "longitudinal", "transverse", "length", "width", "thickness", "upper", "lower", "front", "rear", "left", "right", "vertical", "horizontal", "top", "bottom", "inner", "outer", "clockwise", "counterclockwise", and the like are based on those shown in the drawings, which are only for convenience of describing the present disclosure and simplifying the description and are not intended to indicate or imply that the referred device or element must have a particular orientation, or is constructed and operated in a particular orientation, and therefore cannot be construed as limiting on the present disclosure.

[0021] Furthermore, the terms "first", "second" are only used for descriptive purposes and cannot be understood as indicating or implying relative importance or implying the quantity of technical features indicated.

[0022] In the description of the present disclosure, unless otherwise explicitly specified and defined, terms "mount", "connect" and "couple" should be understood in a broad sense. For example, it may be a fixed connection or may be a detachable connection, or may be an integral connection; it can be a mechanical connection, or may be an electrical connection, or may be in communication with each other; it may be a direct connection, or an indirect connection through an intermediate medium, or it may be an internal communication between two elements or an interaction between the two elements. For those of ordinary skills in the art, the specific meanings of the above terms in the present disclosure can be understood according to specific situations.

[0023] In the present disclosure, unless otherwise explicitly specified and defined, a first feature being "above" or "below" a second feature may include direct contact between the first feature and the second feature, or it may also include the first feature and the second feature not being in direct contact but being in contact through other feature(s) between them. Moreover, the first feature being "on", "above" and "over" the second feature includes the first feature being directly above and obliquely above the second feature, or simply indicates that the level of the first feature is higher than that of the second feature. The first feature being "under", "below" and "underneath" the second feature includes the first feature being directly below and obliquely below the second feature, or simply indicates that the level of the first feature is lower than that of the second feature.

[0024] Various different implementations or examples are provided below to implement different structures of the present disclosure. In order to simplify the disclosure of the present disclosure, components and settings of particular examples are described below. It is clear that, they are examples only and are not intended to limit the present disclosure. In addition, the present disclosure may repeat reference numbers and/or reference letters in different examples, and such repetition is for purposes of simplification and clarity, and itself does not indicate the relationship between the various implementations and/or settings discussed. In addition, the present disclosure provides examples of various specific processes and materials, but those of ordinary skills in the art may be aware of the application of other processes and/or the use of other materials.

[0025] As shown in FIGS. 1-6, an embodiment of the present disclosure provides a toilet device 100, which can be used for a suction type intelligent toilet, and can be a sitting toilet or a squatting toilet.

[0026] As shown in FIG. 1, the present embodiment will be described in detail with a reference to a sitting type toilet device 100. The toilet device 100 includes a toilet body 1, and a flushing system 2 mounted in cooperation with the toilet body 1.

[0027] As shown in FIGS. 2 and 3, the toilet body 1 includes a toilet bowl 10 and a foundation 11. The toilet bowl 10 is provided with a first spray washing port 101, a second spray washing port 10, and a sewage discharge port 103. The first spray washing port 101 and the second spray washing port 102 are connected with the flushing system 2 through a pipe, and both are used for cleaning the toilet body 1. The sewage discharge port 103 is connected to a sewage system and discharges cleaned excrement in the toilet bowl 10.

[0028] The toilet body 1 includes a front end 1a and a rear end 1b opposite to the front end 1a, and the rear end 1b may be provided corresponding to a mounting surface of the wall. Along a front-rear direction of the toilet body 1, the first spray washing port 101 is disposed at a front portion of the toilet bowl 10, and the second spray washing port 102 is disposed at a rear of the first spray washing port 101. Along a height direction of the toilet body 1, both the first spray washing port 101 and the second spray washing port 102 are located at an upper portion of the toilet bowl 11.

[0029] In an exemplary embodiment, a plurality of first spray washing ports 101 are provided and arranged in a circumferential direction of the toilet bowl 10. A plurality of second spray washing ports 102 are provided and arranged along the circumferential direction of the toilet bowl 10, and the plurality of second spray washing ports 102 may be arranged on the left and right sides, so that a better flushing effect can be achieved.

[0030] The toilet bowl 10 has an arc-shaped front portion 104, an arc-shaped rear slope portion 105 with inclined design, and a water sealing zone 106 located at the bottom. The arc-shaped front portion 104 and the inclined rear slope portion 105 form a main chamber extending from top to bottom. The shape of the arc-shaped front portion 104 provides a space for receiving urine, and the rear slope portion 105 is gradually inclined forward from top to bottom along the height direction of the toilet body 1 to avoid contact between the rear slope portion 105 and solid excrement during defecation. The water sealing zone 106 is provided at the lower portion of the main chamber and extends toward the rear or side portion of the toilet bowl 10. The sewage discharge port 103 is provided at the rear portion or the side portion of the toilet bowl 10 and in communication with the water sealing zone 106. The water sealing zone 106 has a horizontal columnar storage space for storing a certain volume of water, preventing the suction device 12 from coming into contact with the solid excrement in the toilet bowl 10, and preventing the solid excrement from adhering to a ceramic surface of the toilet bowl 10. The stored water in the toilet bowl 10 fills the water sealing zone 106 and fills the lower portion of the main chamber so that the water can contact a lower portion of the rear slope portion 105 of the toilet bowl 10. Upon flushing, a liquid surface rising portion significantly raises the water level of the main chamber. The inclined design of the rear slope portion 105 can facilitate collection of liquid and paper. The structural design of the toilet bowl 10 according to the embodiment of the present disclosure can significantly raise the water level, gather excrement, and prevent solid excrement from sticking to an inner wall of the toilet bowl 10 during a sewage discharge process.

[0031] The design of the toilet bowl 10 of the embodiment of the present disclosure reduces the need for higher hydraulic forces (flow rate and pressure), and the upper toilet paper on the slightly lowered slope (front slope portion) can be flushed off only by the force of the flushing water flow. In addition, the volume of water stored in the toilet bowl 10 exceeds the water sealing zone 14 and reaches the main chamber, so as to be capable of having a high storage water level, and the water level of the main chamber rises quickly during flushing, therefore, it is easier to flush away excrement.

[0032] As shown in FIGS. 1 and 2, the toilet device 100 further includes a suction device 12, and the suction device 12 is mounted in cooperation with the sewage discharge port 103 for generating a negative pressure to discharge excrement in the toilet bowl 10. The suction device 12 of the present embodiment may adopt an immersion pump or, in other embodiments, a vacuum pump or the like.

[0033] As shown in FIG. 2, the toilet device 100 further includes a backflow prevention device 13 disposed at an outlet of the suction device 12, and a backflow prevention valve is used in this embodiment. The suction device 12 is mounted in cooperation with the sewage discharge port 103 of the toilet body 1 by means of a flange connector 14 integrating an O-ring seal and a connecting screw (not shown) fixed to the ground. The suction device 12 can not only suck liquids and solids, but also process solid excrement and toilet paper, stir and crush them.

[0034] In this embodiment, the backflow prevention valve 13 is mounted or reinforced at the outlet of the suction device 13 by a magnetic attraction element 130. When the suction device 12 is in operation, the backflow prevention valve 13 is automatically opened under the push of the sucked object; after the suction device 13 is stopped, the backflow prevention valve 13 is automatically closed, sealing the toilet bowl 10 from a sewer. The backflow prevention valve 13 is provided with a closing device (not shown), so that the rise of the water level in the toilet bowl 10 does not open the backflow prevention valve 13, and the high pressure generated when the suction device 12 is operated is required to open the backflow prevention valve 13. The magnetic attraction element 130 is fixed at a predetermined height, and when the toilet bowl 10 reaches a predetermined water pressure, the backflow prevention valve 13 is opened, or is forced to be opened by a discharge system. The action force of the suction device 12 is higher than the resistance of opening the backflow prevention valve 13, and when the suction device 12 is not operated, the excrement is prevented from flowing out. The operating time of the suction device 12 is set according to the time of emptying the toilet bowl.

[0035] In another embodiment, the magnetic attraction element 130 of the backflow prevention valve 13 will open the backflow prevention valve 13 by an opening circuit of a control device 24 (the control device 24 of the flushing system 2 described below).

[0036] As shown in FIG. 4, the toilet body 1 of the embodiment of the present disclosure may be of a split type, including a form of a main body and a base, and the main body and the base may be assembled with each other. The figure is a schematic diagram of the base portion, and the main body portion can be referred to the upper half in FIG. 2. In the split type toilet body 1, the suction device 12 may be provided in a base F which may be fitted with the main body E of the sitting toilet or may be fitted with the main body of the squatting toilet, so that the base F may be adapted to the sitting toilet or the

squatting toilet.

[0037] As shown in FIG. 1, the flushing system 2 includes a first spray washing pipe 21, a second spray washing pipe 22, an on-off assembly 23 connected to the first spray washing pipe 21 and the second spray washing pipe 22, and a control device 24 electrically connected to the on-off assembly 23 and controlling the on-off assembly 23 to open and close. The first spray washing pipe 21 is mounted in cooperation with the first spray washing port 101 of the toilet body 1, and the second spray washing pipe 22 is mounted in cooperation with the second spray washing port 102.

[0038] As shown in FIG. 2, a first nozzle 210 is provided at a water outlet end of the first spray washing pipe 21, the first nozzle 210 is located at a front end of the toilet bowl 10, and can flush away toilet paper or the like thrown by the user, and the first nozzle 210 is mounted in cooperation with the first spray washing port 101. As shown, the water sprayed from the first nozzle 210 enters the horizontal columnar storage space of the water sealing zone 106 along a slightly descended curve at the front end of the toilet bowl 10. The first nozzle 101 includes a horizontal section 2101 and a bent section 2102 that bends toward inside of the toilet bowl 10, the horizontal section 2101 guides the sprayed water flow horizontally to a position close to the front wall surface, and the bent section 2102 sprays the water flow to an inner wall surface of the toilet bowl 10, thereby effectively cleaning dirt stuck to the inner wall surface of the toilet bowl 10. A water outlet end of the second spray washing pipe 22 is provided with a second nozzle 220, the second nozzle 220 is located on the side or back surface (rear side) of the toilet bowl 10, and is mounted in cooperation with the second spray washing port 102, for cleaning the inner wall of the rear portion of the toilet bowl 10, and cleaning out excrement contacted with the inner wall of the rear portion.

[0039] In order to improve the cleaning effect, the first nozzle 210 and the second nozzle 220 may alternately spray water, from left to right, or flush in pulses, or the like. According to the available water supply pressure and flow volume, the first nozzle 210 and the second nozzle 220 are configured to be interchangeable, and injection angles and injection directions of the first nozzle 210 and the second nozzle 220 to the bowl wall are configured to be variable.

[0040] As shown in FIGS. 2 and 3, the second nozzle 220 has a backward spray coverage range of about 10 degrees, and a forward spray coverage range of about 45 degrees, which can be specifically set according to the actual situation. The first nozzle 210 and the second nozzle 220 may include threaded interfaces provided with sealing rings for connecting them to the first spray washing pipe 21 and the second spray washing pipe 22. The first nozzle 210 and the second nozzle 220 may have various shapes such as a circular shape or a flat shape. The first nozzle 210 can completely clean the inner wall of the front portion of the toilet bowl 10. The angle setting of the second nozzle 220 is to ensure that the flushing range is sufficient to cover the entire toilet bowl 10.

[0041] In order to improve the cleaning performance of the nozzle, the first nozzle 210 and the second nozzle 220 are not fixed on the inner wall of the toilet bowl 10, but are located below the upper edge of the toilet bowl 10, with a short distance from the inner wall. The spray will not flow parallel to the inner wall, but at a certain angle with the inner wall, and the range covered by the spray washing is increased by the angle change, so the cleaning effect of the system can be improved.

[0042] The primary purpose of the first nozzle 210 is to flush solid objects such as toilet paper thrown by the user after cleaning with paper after urinating. The first nozzle 210 enters a portion of the water sealing zone 106 along a slightly descended curve at the front end of the toilet bowl. The direction of the first nozzle 210 guides the ejected water flow to be inclined toward the front wall surface of the toilet bowl 10. The second nozzle 220 mainly cleans the inner wall of the rear portion of the toilet bowl 10 because it may come into contact with viscous particles. In order to improve the cleaning effect, the second nozzles 220 on both sides are operated alternately, either from left to right, or flush in pulses.

[0043] In the present embodiment, the on-off assembly 23 adopts an electric control valve, and the first spray washing pipe 21 and the second spray washing pipe 22 are respectively provided with one electric control valve: a first electric control valve 23a and a second electric control valve 23b. In other embodiments, the first spray washing pipe 21 and the second spray washing pipe 22 may also adopt an integrated electric control valve, which is not limited herein.

[0044] As shown in FIG. 1, the flushing system 2 further includes a pressurizing device provided in the first spray washing pipe 21 and the second spray washing pipe 22 for pressurizing the spray washing water of the first spray washing pipe 21 and the second spray washing pipe 22, so as to provide a better flushing effect. An example in which three water ways A, E, and C provide three water supply modes is illustrated in the figure, and any one of the water ways can realize water supply to the first spray washing pipe 21 and the second spray washing pipe 22. The water way A supplies water by using a pressurized water tank (such as a gravity flushing water tank 25), the water way B supplies water by using a booster pump, and the water way C supplies water by using a booster pump and a tank body 28 containing a gas-liquid mixture with a certain pressure. The three water supply water ways can supply water separately or in combination with each other, which is not limited herein.

[0045] When the pressurizing device adopts the gravity flushing water tank 25, water inlet ends of the first spray washing pipe 21 and the second spray washing pipe 22 are in communication with the gravity flushing water tank 25. The gravity flushing water tank 25 is suspended at a height relative to the toilet body 10 so that pressure is provided only by the gravity of the water in the water tank 25.

[0046] When the booster pump 29 is used as the pressurizing device, the booster pump directly pressurizes the water in the first spray washing pipe 21 and the second spray washing pipe 22.

[0047] As shown in FIG. 1, the control device 24 includes a control unit (not shown), and an operation panel electrically connected to the control unit, and operation buttons (for example, F, M, S, B as shown in FIG. 1) are provided on the operation panel. The operation button may be a physical button, or may be a touch button, may be designed as a piezoelectric switch, or may be designed as a micro switch integrated in the panel. The operation panel can be placed above the toilet body 1, and a switch is connected to the control unit with a control program to parameterize different flushing programs. The control device 24 may also be displayed on the terminal through a user interface, which may be the user interface of a sitting or squatting toilet.

[0048] As shown in FIG. 7, in the present embodiment, the control device 24 forms a plurality of flushing modes by controlling the sequence of the opening and closing of the electric control valves 23a and 23b and the emptying (draining) of the toilet bowl according to different flushing command signals received. In the different flushing modes, the flushing system 2 achieves effective flushing by setting the time sequence of flushing, emptying and refilling the toilet so that the water in the toilet reaches different level positions to maintain the appropriate solids and liquids ratio. The emptying of the toilet bowl in the embodiment of the present disclosure is achieved by the suction device 12.

[0049] In some cases, the toilet typically uses two flushing modes: one for solids (e.g. feces) and the other for liquids (e.g. urine). Liquid flushing typically contains only half the volume of solid flushing, and male and female users typically use between 2.5 and 3 liters of water every time. The flushing of European toilets is specified by the EN 997 standard, with the volume of water being about 6 liters per flush, and the volume of water in the US HET standard is 4.8 liters per flush.

[0050] Male and female users are known to have different practices after urination. Those who do not use toilet paper after urination are usually male users, and those who use toilet paper after urination are usually female users. The male users flush directly after each urination, and female users need toilet paper after urination is over, which means female users need more water to flush the toilet paper in the toilet. Male users save about 50% water in flushing urine compared to female users because there is no need to flush toilet paper with water, the flushing water simply flush the ceramic surface and refills the siphon.

[0051] Therefore, the toilet device 100 of the embodiment of the present disclosure divides liquid flushing into two flushing modes. A first flushing mode is suitable for paperless liquid flushing for male, and a second flushing mode is suitable for liquid flushing with paper for female.

[0052] The first flushing mode is suitable for paperless liquid flushing for male, and the operation method is as follows.

[0053] After toileting, the user presses a button with a male flushing operation (for example, the button may be prompted by a symbol M) to trigger a first flushing command (for example, a low voltage pulse signal). The control device 24 of the flushing system receives the first flushing command, activates the suction device 12 to suck out the excrement while the backflow prevention valve 13 is automatically opened. When the suction device 12 is stopped after activation for a first predetermined emptying time, the backflow prevention valve 13 is closed, so as to prevent water from the sewer from flowing back to the water sealing zone 106 of the toilet.

[0054] When the suction device 12 is stopped for a second predetermined emptying time, the first electric control valve 23a is opened, the first spray washing pipe 21 delivers water flow, and the first nozzle 210 of the first spray washing pipe 21 sprays water out, wetting the front portion of the toilet bowl 10 for cleaning, and replenishing the volume of water in the water sealing zone 106. The required volume for flushing is about 200 ml, until a first predetermined liquid level L1 is reached (referring to the corresponding dotted line position in FIG. 2) to cover the water sealing zone 106 and thus cover a portion of the suction device 12 that is in contact with the excrement. Alternatively, the volume of water in the water sealing zone 106 may be replenished by the second spray washing pipe 22, and similarly, the water sealing zone 106 may be replenished by the second spray washing pipe 22 in various flushing modes described below, which is not limited herein.

[0055] Herein, the liquid level of the toilet body 1 can be estimated by the opening time of the first electric control valve 23a, or can be detected by providing a liquid level sensor in the toilet body 1, which is not limited herein.

[0056] A specific control method of the first flushing mode can refer to Table 1, where X represents a time variable, s represents seconds, and the corresponding time can be set by software. This table is a typical logic setup diagram of a flushing program.

Table 1

	Male flush						Water level
Toilet ready for use							L1
Toilet use (paperless)	X (s)						LM
Flush button (M)		X (s)					LM
Suction			X (s)				L0
Stop time				X (s)			L0

(continued)

	Male flush		Water level
Toilet bowl filling		X (s)	L1

[0057] Herein, when preparing to use the toilet, an initial basic water level L1 is in the toilet bowl. After the user uses the toilet, the water level rises to LM, and the user presses the flush button to directly suck and empty. After a short time, the toilet is flushed and filled with the water level to L1. The main purpose of setting the stop time is to start the filling process only after the process of sucking away the excrement is completely finished. There needs to be a short gap time between them, otherwise the time for stopping the suction pump will not be clear.

[0058] The first flushing mode is configured to open the first spray washing pipe 21 or the second spray washing pipe 22 after the emptying of the toilet bowl 10 is completed, so as to realize less water consumption.

[0059] When in the first flushing mode, the control device 24 is configured to control the first spray washing pipe 21 or the second spray washing pipe 22 to open after the emptying of the toilet bowl 10 is completed, and to close the first spray washing pipe 21 or the second spray washing pipe 22 when the water in the toilet bowl 10 reaches the first predetermined liquid level L1.

[0060] The second flushing mode is suitable for liquid flushing with paper for female. The specific operation method is as follows.

[0061] Since the toilet paper is used by a female user after urinating, the paper is likely to be dropped in the front portion of the toilet bowl 10, and therefore, the volume of flushing water must be sufficient to flush the paper pieces to the water-containing portion of the toilet before being discharged. After toileting, the user presses a button with a female flushing operation (the button can be prompted by a symbol F) to trigger a second flushing command (low voltage pulse signal).

[0062] The control device 24 receives the second flushing command, and controls the first electric control valve 23a to open the first spray washing pipe 21, and the water of about 400 ml is sprayed from the first nozzle 210. The first nozzle 210 is mounted at the front portion of the toilet bowl 10 close to the front wall of the toilet bowl, so that the toilet paper enters the lower portion of the toilet bowl 10 from the front portion of the toilet bowl 10 to flush the toilet paper to the water sealing zone portion of the toilet bowl 10. The water level rises to the second predetermined liquid level L2, the paper in the toilet bowl 10 can float on the water surface, and the water level in the toilet bowl 10 is higher than the lower end position of the rear slope portion 105 of the toilet bowl 10.

[0063] When the water level rises to the second predetermined liquid level L2 (referring to the corresponding dotted line position in FIG. 2), the control device 24 controls the suction device 12 to open, and the suction device 12 sucks out the liquid with the floating toilet paper. The suction device 12 is stopped after the operation of the suction device 12 is started for a third predetermined emptying time, and after the suction device 12 is started and before the suction device 12 is stopped, the control device 24 controls the first electric control valve 23a to close. The suction device 12 and the first spray washing pipe 21 operate simultaneously for a period of time.

[0064] When the water in the toilet bowl 10 is evacuated, the suction device 12 will be stopped, and the control device 24 controls the first electric control valve 23a to open again to open the first spray washing pipe 21 until the water level of the water sealing zone 106 reaches the first predetermined liquid level L1, which is about 200 milliliters of water, so as to cover the components of the suction device 12 in contact with the excrement. The backflow prevention valve 13 is closed to prevent gas from the waste water pipe from entering. Please refer to Table 2 for the specific control process.

Table 2

	Female flush						Water level
Toilet ready for use							L1
Toilet use (with paper)	X (s)						LF
Flush button (F)		X (s)					LF
Flush			X (s)				L2
Suction				X (s)			L0
Stop time					X (s)		L0
Toilet bowl filling						X (s)	L1

[0065] Herein, when preparing to use the toilet, an initial basic water level L1 is in the toilet bowl. After the user uses the toilet, the water level rises to LF. The user presses the flush button for flushing, the water level rises to L2, and then suction and emptying is performed. After a short time, the toilet is flushed and filled with the water level to L1.

[0066] In the second flushing mode, the control device is configured to open the first spray washing pipe 21 before the emptying of the toilet bowl 10 is started, and to open the first spray washing pipe 21 or the second spray washing pipe 22 after the emptying of the toilet bowl 10 is completed, thereby enabling the cleaning of the toilet bowl 10 in accordance with the female urination habit.

[0067] Before the emptying of the toilet bowl 10 is started, the first spray washing pipe 21 is controlled to open, and the first spray washing pipe 21 is closed when the water in the toilet bowl 10 reaches the second predetermined liquid level.

[0068] After the emptying of the toilet bowl 10 is completed, the first spray washing pipe 21 or the second spray washing pipe 22 is controlled to open, and when the water in the toilet bowl 10 reaches the first predetermined liquid level L1, the first spray washing pipe 21 or the second spray washing pipe 22 is closed. Water consumption analysis for the second flushing mode is as follows: approximately 400 ml of water for flushing the paper, approximately 200 ml of water for refilling the bottom of the toilet bowl, and the total volume of emptying of approximately 800 ml (including approximately 200 ml of urine).

[0069] The toilet device 100 of the embodiment of the present disclosure is also provided with a third flushing mode, which is suitable for use by male or female after discharging solid feces.

[0070] The third flushing mode needs to achieve two objectives. The first objective is to form the solid excrement into an emulsion and discharge it. In this case, more water needs to be added to the toilet bowl 10 to dilute the solids, so the flushing volume is higher than that of the second flushing mode, and the suction device 12 needs to be started at the third predetermined liquid level L3 (referring to the corresponding dotted line position in FIG. 2). The second objective is to clean the stains on the toilet bowl 10. The specific operation method is as follows.

[0071] After toileting, the user presses a solid (fecal) flush button with pressurization function (the button can be prompted by a symbol S) to trigger the third flushing command.

[0072] The control device 24 receives the third flushing command, controls the first electric control valve 23a and the second electric control valve 23b to open, so as to open the first spray washing pipe 21 and the second spray washing pipe 22, and to close the first spray washing pipe 21 and the second spray washing pipe 22 after a first predetermined flushing time. The water flow from the first nozzle 210 of the first spray washing pipe 21 and the second nozzle 220 of the second spray washing pipe 22 is sprayed toward the wall surface of the toilet bowl 10 until the water flow increases to a third predetermined liquid level L3 to the extent that the solids are partially covered with the flushing water and the toilet paper can float.

[0073] When the water is still flushing in, the suction device 12 is started to suck the excrement in the toilet bowl, and is stopped after a fourth predetermined emptying time. The opening time of the first spray washing pipe 21 and the second spray washing pipe 22 when the suction device 12 is in operation is defined as a first predetermined duration. The first spray washing pipe 21 and the second spray washing pipe 22 are stopped before the suction device 12 is stopped in order to completely suck out the excrement in the toilet bowl 10.

[0074] After the suction device 12 stops suction, the first spray washing pipe 21 is opened to fill the toilet bowl 10 with water, and the water rises to the first predetermined liquid level L1 again. For specific control methods, please refer to Table 3.

Table 3

	Solid excrement flushing						Liquid level
Toilet ready for use							L1
Toilet use (with paper)	X (s)						Ls
Flush button (S)		X (s)					Ls
Flush (both side nozzles)			X (s)				L3
Suction				X (s)			L0
Stop time					X (s)		L0
Toilet bowl filling						X (s)	L1

[0075] Herein, when preparing to use the toilet, an initial basic water level L1 is in the toilet bowl. After the user uses the toilet, the water level rises to Ls. The user presses the flush button, the two nozzles flush, the water level rises to L3, and then suction and emptying is performed. When emptying, the two nozzles flush for a period of time, and after a short time after emptying, the toilet bowl is flushed and filled with the water level to L1.

[0076] The third flushing mode is configured to open the first spray washing pipe 21 and the second spray washing pipe 22 before the emptying of the toilet bowl 10 is started, and to open the first spray washing pipe 21 or the second spray washing pipe 22 after the emptying of the toilet bowl 10 is completed, thereby achieving a higher cleaning effect.

[0077] When in the third flushing mode, the control device 24 is configured to:

control the first spray washing pipe 21 and the second spray washing pipe 22 to open for a first predetermined flushing time before the emptying of the toilet bowl 10 is started, so that the liquid level of the toilet bowl 10 reaches a third predetermined liquid level, the third predetermined liquid level being greater than the second predetermined liquid level;

continuously open the first spray washing pipe 21 and the second spray washing pipe 22 for a first predetermined duration when the toilet bowl 10 is being emptied;

close the first spray washing pipe 21 and the second spray washing pipe 22 before the emptying of the toilet bowl 10 is completed; and

control the first spray washing pipe 21 or the second spray washing pipe 22 to open after the emptying of the toilet bowl 10 is completed, and close the first spray washing pipe 21 or the second spray washing pipe 22 when the water in the toilet bowl 10 reaches a first predetermined liquid level. Water consumption analysis of the third flushing mode is as follows: about 600 ml for cleaning the bowl wall and flushing the paper, and about 200 ml for replenishing the water sealing of the toilet bowl and cleaning the front portion of the toilet bowl. The input of solid excrement and liquid excrement is approximately 350 ml. The filled water (approximately 200 ml) is left in the lower portion of the toilet bowl for next use. The total volume to be treated is approximately 950 ml of liquid (excrement contains approximately 80% liquid).

[0078] The toilet device 100 according to the embodiment of the present disclosure is also provided with a fourth flushing mode: a pressurized flush suitable for private residential or commercial or public applications.

[0079] The fourth flushing mode may be an additional function of the third flushing mode, and is mainly different from the third flushing mode in that when the fourth flushing mode is activated, the opening time of the first electric control valve 23a and the second electric control valve 23b is prolonged by about 30%, thereby increasing the flushing volume, and the opening time of the suction device 12 is also relatively prolonged.

[0080] The opening time of the first electric control valve 23a and the second electric control valve 23b is defined as a first predetermined flushing time. The opening time of the first spray washing pipe 21 and the second spray washing pipe 22 when the suction device 12 is in operation is defined as a second predetermined duration, which is greater than the first predetermined duration of the third flushing mode.

[0081] The activation time of the suction device 12 is defined as a fifth predetermined emptying time, which is greater than the fourth predetermined emptying time. The suction device 12 is activated when the liquid level reaches the third predetermined liquid level L3, and the time at which the liquid level reaches the third predetermined liquid level L3 may be estimated from the opening time of the first electric control valve 23a and the second electric control valve 23b, or may be detected by the liquid level sensor, which is not limited herein.

[0082] When in the fourth flushing mode, the control device 24 is configured to: control the first spray washing pipe 21 and the second spray washing pipe 22 to open for the first predetermined flushing time so that the liquid level in the toilet bowl 10 reaches the third predetermined liquid level before the emptying of the toilet bowl 10 is started;

continuously open the first spray washing pipe 21 and the second spray washing pipe 22 for a second predetermined duration when the toilet bowl 10 is being emptied, the second predetermined duration being greater than the first predetermined duration;

close the first spray washing pipe 21 and the second spray washing pipe 22 before the emptying of the toilet bowl 10 is completed; and

control the first spray washing pipe 21 or the second spray washing pipe 22 to open after the emptying of the toilet bowl 10 is completed, and close the first spray washing pipe 21 or the second spray washing pipe 22 when the water in the toilet bowl 10 reaches the first predetermined liquid level. In addition, a fourth flushing command corresponding to the fourth flushing mode is triggered by the user pressing the flush button with the pressurized flush (the button can be prompted by a symbol B). The remaining operation steps of the fourth flushing mode may refer to the third flushing mode, and will not be repeatedly described here.

[0083] To avoid the danger of running out of water volume due to excessive use, the flushing system is equipped with a reminder function. A first reminder mode is that: a first sensor 26 electrically connected to the control device 24 is disposed in the water tank 25 for detecting the water level, and when the water level of the water tank 25 does not match a water

consumption curve, an indicator light reminder is performed. The control device 24 stores the water consumption curve in advance, collects and calculates the water consumption data of the water tank 25 to determine whether they are matched, and performs an indicator light reminder when they are not matched. The second reminder mode is that: the water level corresponding to the flush button B in the toilet bowl, which is recommended to use pressurized flushing, can be marked and just prompted by the indicator light. The flush button B can prompt the user to operate by means of the change of the indicator light.

[0084] The toilet device 100 according to the embodiment of the present disclosure is also provided with a fifth flushing mode: a fully automatic full flush suitable for use in public or commercial applications where the user is not familiar with the flush process of the fourth flushing mode. The fifth flushing mode can be used to treat solids (feces) that are higher than the usual volume in a toilet bowl. Since a larger volume of solids is discharged, a larger volume of water (e.g., about 800 milliliters instead of about 600 milliliters) needs to be injected to clean the bowl wall and flush away the paper.

[0085] A second liquid level sensor 27 is provided on a back surface of the toilet bowl 10 for detecting the liquid level after the solid and liquid excrement are input into the toilet bowl. When the control device 24 receives that the liquid level in the toilet bowl exceeds a predetermined liquid level value, the control device 24 selects to activate the fifth flushing mode.

[0086] For example, when approximately 170 milliliters of solids are input, the water level of the toilet bowl 10 is raised to a high water level of the toilet bowl. If there are more than about 200 milliliters of urine and more than about 170 milliliters of solids volume, the second liquid level sensor 27 may detect excrement input above a predetermined level and may adjust the flushing volume accordingly, which means that the fifth flushing mode will be carried out.

[0087] The fifth flushing mode may be an automatic flushing mode, and is mainly different from the fourth flushing mode in that this mode does not require a button operation by the user, and a fifth flushing command of the control device 24 to activate the fifth flushing mode is obtained through the second liquid level sensor 27. When the second liquid level sensor 27 senses that the solid and liquid input in the toilet bowl exceeds a predetermined value (generally, the liquid level in the toilet bowl exceeds a predetermined liquid level value), the fifth flushing mode is selected to be activated.

[0088] After the fifth flushing mode is activated, the control device 24 controls the first spray washing pipe 21 and the second spray washing pipe 22 to open for a second predetermined flushing time, and the second predetermined flushing time is greater than the first predetermined flushing time.

[0089] When the liquid level in the toilet bowl 10 reaches a fourth predetermined liquid level, the control device 24 controls the suction device 12 to activate for a sixth predetermined emptying time and then stop. The first spray washing pipe 21 and the second spray washing pipe 22 are closed before the suction device 12 stops operating, and the first spray washing pipe 21 and the second spray washing pipe 22 are continuously opened for a third predetermined duration after the suction device 12 is activated. The fourth predetermined liquid level is greater than the third predetermined liquid level, the sixth predetermined emptying time is greater than the fifth predetermined emptying time, and the third predetermined duration is greater than or equal to the first predetermined duration.

[0090] When the suction device 12 stops suction, the first spray washing pipe 21 is opened again, and when the liquid level in the toilet bowl 10 reaches the first predetermined liquid level L1, the first spray washing pipe 21 is closed.

[0091] In order to distinguish between the flushing water and the rising waste liquid level in the toilet bowl 10, the second liquid level sensor 27 is turned off when the flushing operation is performed and the liquid flows in from top to bottom (urination). For example, upon receiving the flushing signal, the second liquid level sensor 27 turns on detection to determine whether to activate the fifth flushing mode. The second liquid level sensor 27 is turned off after the detection is completed. Therefore, the second liquid level sensor 27 is turned off when the toilet bowl 10 is flushed in a certain flushing mode or when the toilet bowl 10 is in use. The remaining operation steps of the fifth flushing mode may be the same as those of the fourth flushing mode, and will not be repeatedly described here.

[0092] Optionally, the fifth flushing mode may be manually triggered, and a corresponding button may be triggered by the user to trigger the fifth flushing signal, which is not limited herein.

[0093] When in the fifth flushing mode, the control device 24 is configured to: control the on-off assembly 23 to open the first spray washing pipe 21 and the second spray washing pipe 22 for a second predetermined flushing time, before the emptying of the toilet bowl 10 is started, when the second liquid level sensor 27 detects that the liquid in the toilet bowl 10 reaches a fourth predetermined liquid level (the fourth predetermined liquid level is higher than the third liquid level), the second predetermined flushing time being greater than the first predetermined flushing time;

continuously open the first spray washing pipe 21 and the second spray washing pipe 22 when the toilet bowl 10 is being emptied;

close the first spray washing pipe 21 and the second spray washing pipe 22 before the emptying of the toilet bowl 10 is completed; and

control the first spray washing pipe 21 or the second spray washing pipe 22 to open after the emptying of the toilet bowl 10 is completed, and close the first spray washing pipe 21 or the second spray washing pipe 22 when the water in the

toilet bowl 10 reaches the first predetermined liquid level.

[0094] The water consumption for flushing of the toilet device according to the embodiment of the present disclosure is < 1.0 liters per flush. The fifth flushing mode saves about 79% of water compared to the high-efficiency toilet of the US standard having 4.8 liters per flush (US HET toilets have about 1.28 gallons per flush). When pressurized flushing is used, the saved water volume is low, about 1.5 liters of water is used per flush for pressurized flushing. However, the saved water volume is still about 69% compared with 4.8 liters per flush.

[0095] When any of the above-described flushing modes according to the embodiments of the present disclosure are activated, the pressurizing device is required to pressurize so that the fluid pressure can be between 1.2 and 4.0 bar. For example, a gravity water tank 25, a booster pump 29 and the like may be used as the above-mentioned pressurizing device.

[0096] When only the gravity water tank 25 is used as the pressurizing device, the water flow pressure of the gravity water tank 25 reaches about 0.15 bar to 0.2 bar, the flushing performance will thus be reduced, but can be compensated to some extent by higher flushing volume and larger flushing tube diameter. The water of the gravity water tank 25 may be supplemented with tap water or may be water collected and filtered from the rainwater collection tank. In this case, the solenoid valves 23a, 23b can also be operated without counter pressure. When the water level of the gravity water tank 25 is low, the booster function is turned off.

[0097] The applicant has proved through research that the toilet device 100 implemented by the present disclosure has a high water-saving effect. Table 4 shows the calculation of saved water volume after two full flushes and six urinations per day for two adults (one male and one female) using the toilet device 100 according to the embodiment of the present disclosure, and the saved water volume is 82% (77% in the case of no male flushing mode).

Table 4

	Number of uses per day*	HET Water volume per flush	HET Total water consumption	Micro flush volume per flush	Total water consumption of micro flush
Fully automatic flushing	4	4.8 L	19.2 L	<1.0 L	4.0 L
Male flush	6	2.4 L	14.4 L	0.2 L	1.2 L
Female flush	6	2.4 L	14.4 L	0.6 L	3.6 L
Total			48.0 L		8.8 L
* Example: One male and one female user per day					

[0098] As shown in FIG. 1, the flushing system 2 according to the embodiment of the present disclosure further includes a tank body 28 connected to the first spray washing pipe 21 and the second spray washing pipe 22, and the tank body 28 is used for storing a gas-liquid mixture having a certain pressure. The tank body 28 can convey the gas-liquid mixture to the first spray washing pipe 21 and the second spray washing pipe 22 to flush the toilet bowl, which improves the flushing capacity on one hand and saves water consumption on the other hand.

[0099] In addition, a bubbler may be provided at the first nozzle 210 of the first spray washing pipe 21 and the second nozzle 220 of the second spray washing pipe 22 to produce a gas-liquid mixture, so as to achieve a better cleaning effect.

[0100] As shown in FIG. 6, the tank body 28 is made of a pressure-resistant steel body and has a water inlet and an air inlet (not labeled). In an exemplary embodiment, the tank body 28 adopts a flow guide rubber membrane box, an air inlet valve is provided at the air inlet, and an air pump is provided. Under the action of the air pump, compressed air (1.2 bar to 4.0 bar or more) can be input into the flow guide rubber membrane box, with the effect that the flow guide rubber membrane box will expand to a side containing water through the pressurized air and fill the volume with the pressurized air. A booster pump is provided at the water inlet. Starting the booster pump will generate water pressure higher than the pressure on the air side to resist the air pressure. Since the air is compressible, the water side can compress the air side and fill the tank body with water at the pressure set by the booster pump.

[0101] As shown in FIGS. 5 and 6, the flushing system according to an embodiment of the present disclosure can be all integrated into a box body D. When the flushing system is used for a plurality of toilets, at least the control panel cannot be integrated into the box body, and a plurality of panels needs to be provided corresponding to a plurality of toilets for user operation, which can realize an integrated, pre-mounted, unitary design, which is plug and play, can be placed on the floor, or can be mounted on the wall of the room. The design is easy to mount while allowing one flushing system to be applied to a plurality of toilets. For example, for a box body for a plurality of toilets in a public restroom, an integrated plumbing system with universal inlet connectors can be provided, which can be supplied water from the side or top. All electronic components in the box body are integrated and wired, so that the integrated flushing system only needs to be electrically

connected to a power source or can be electrically connected to an operating switch (e.g. a plug). For the operation panel, the wiring is pre-mounted and the control unit (e.g. CPU) is also integrated. In order to ensure a safe space, the tank body 28 may also be "flat-shaped" and its depth needs to be reduced compared to a spherical or cylindrical container. Depending on the performance of the booster pump, the booster pump can be mounted outside the box body. The control unit is also electrically connected to the first liquid level sensor 26, and the second liquid level sensor 27 and is used to start and stop the booster pump. The control unit can also activate a cleaning flush when it has been used for too long and the danger of bacterial growth rises, helping to improve the hygiene of standing water. The flushing system 2 may be provided with a connector with a plug, which can be electrically connected to a DC power source (such as a battery), for power supply.

[0102] The flushing time and the emptying time of each flushing mode according to the embodiment of the present disclosure can be set. Since the flushing process operates and controls the on-off assembly 23 and the suction device 12 in time sequence, the time setting can be adjusted according to the flushing system. After selecting this mode, the operator can select the start time of each valve/pump after pressing the corresponding start button. As shown in Table 5, a setting interface of solid flushing mode is displayed on the operation interface, and the user can select and operate the time and operation sequence on the operation interface.

Table 5

Solid flushing	Ascending order	Activated after startup (seconds)	Duration (seconds)	*Examples*
First solenoid valve 23a	-			
Second solenoid valve 23b	1	0	5	*Flush*
Suction device 12	2	3	8	*Pump*
First solenoid valve 23a	3	12	2	*Fill*
Second solenoid valve 23b	-			
Suction device 12	-			
The procedure can be done by a remote control or a Bluetooth program on smartphone.				

[0103] In the embodiment of the present disclosure, the first predetermined liquid level L1 is an initial basic liquid level, the second predetermined liquid level L2 and the third predetermined liquid level L3 are calculated based on the basic liquid level, and the second predetermined liquid level L2 and the third predetermined liquid level L3 can be determined by controlling parameters such as the opening time of the electric control valves 23a and 23b.

[0104] In the description of the present specification, descriptions with reference to terms "one embodiment", "certain embodiments", "schematic embodiments", "examples", "specific examples", or "some examples" and the like mean that specific features, structures, materials, or characteristics described in connection with the implementations or examples are included in at least one implementation or example of the embodiments of the present disclosure. In this specification, schematic representations of the above terms do not necessarily refer to the same implementations or examples. Further, the specific features, structures, materials, or characteristics described may be combined in a suitable manner in any one or more implementations or examples.

[0105] Although implementations disclosed herein are described above, the described contents are only implementations used for facilitating understanding of the present application, and are not intended to limit the present application. Without departing from the spirit and scope disclosed herein, any person skilled in the art to which the present application pertains may make any modifications and changes in the form and details of implementation, but the scope of patent protection of the present application shall still be defined by the appended claims.

Claims

1. A flushing system, comprising:

a first spray washing pipe and a second spray washing pipe both configured to be connected with a toilet bowl and to supply water to the toilet bowl for flushing;
an on-off assembly connected to the first spray washing pipe and the second spray washing pipe and configured to control opening and closing of the first spray washing pipe and the second spray washing pipe;
a control device electrically connected to the on-off assembly, wherein the control device is configured to control the opening and closing of the first spray washing pipe and the second spray washing pipe, and a sequence

between the opening and closing of the first spray washing pipe and the second spray washing pipe and emptying of the toilet bowl, so as to form a plurality of flushing modes;
wherein the plurality of flushing modes comprise at least one of a first flushing mode and a second flushing mode, and further comprise a third flushing mode; and
wherein the first flushing mode is configured to open the first spray washing pipe or the second spray washing pipe after the emptying of the toilet bowl is completed; the second flushing mode is configured to open the first spray washing pipe before the emptying of the toilet bowl is started, and to open the first spray washing pipe or the second spray washing pipe after the emptying of the toilet bowl is completed; the third flushing mode is configured to open the first spray washing pipe and the second spray washing pipe before the emptying of the toilet bowl is started, and to open the first spray washing pipe or the second spray washing pipe after the emptying of the toilet bowl is completed.

2. The flushing system of claim 1, wherein when in the first flushing mode, the control device is configured to control the first spray washing pipe or the second spray washing pipe to open after the emptying of the toilet bowl is completed, and to close the first spray washing pipe or the second spray washing pipe when water in the toilet bowl reaches a first predetermined liquid level.

3. The flushing system of claim 2, wherein when in the second flushing mode, the control device is configured to:

control the first spray washing pipe to open before the emptying of the toilet bowl is started, and close the first spray washing pipe when the water in the toilet bowl reaches a second predetermined liquid level, wherein the second predetermined liquid level is greater than the first predetermined liquid level; and
control the first spray washing pipe or the second spray washing pipe to open after the emptying of the toilet bowl is completed, and close the first spray washing pipe or the second spray washing pipe when the water in the toilet bowl reaches the first predetermined liquid level.

4. The flushing system of claim 3, wherein when in the third flushing mode, the control device is configured to:

control the first spray washing pipe and the second spray washing pipe to open for a first predetermined flushing time before the emptying of the toilet bowl is started, so that a liquid level of the toilet bowl reaches a third predetermined liquid level, wherein the third predetermined liquid level is greater than the second predetermined liquid level;
continuously open the first spray washing pipe and the second spray washing pipe for a first predetermined duration when the toilet bowl is being emptied;
close the first spray washing pipe and the second spray washing pipe before the emptying of the toilet bowl is completed; and
control the first spray washing pipe or the second spray washing pipe to open after the emptying of the toilet bowl is completed, and close the first spray washing pipe or the second spray washing pipe when the water in the toilet bowl reaches the first predetermined liquid level.

5. The flushing system of claim 4, wherein the plurality of flushing modes further comprises a fourth flushing mode; when in the fourth flushing mode, the control device is configured to:

control the first spray washing pipe and the second spray washing pipe to open for the first predetermined flushing time before the emptying of the toilet bowl is started, so that the liquid level in the toilet bowl reaches the third predetermined liquid level;
continuously open the first spray washing pipe and the second spray washing pipe for a second predetermined duration when the toilet bowl is being emptied, wherein the second predetermined duration is greater than the first predetermined duration;
close the first spray washing pipe and the second spray washing pipe before the emptying of the toilet bowl is completed; and
control the first spray washing pipe or the second spray washing pipe to open after the emptying of the toilet bowl is completed, and close the first spray washing pipe or the second spray washing pipe when the water in the toilet bowl reaches the first predetermined liquid level.

6. The flushing system of claim 5, further comprising a water tank, wherein water inlet ends of the first spray washing pipe and the second spray washing pipe are both connected to the water tank, the water tank is provided with a first liquid level sensor, the first liquid level sensor is electrically connected to the control device, and the control device is

configured to remind a user not to use the fourth flushing mode when the first liquid level sensor detects that a water level and a water consumption curve of the water tank do not match a water level and a water consumption curve stored in the control device in advance.

7. The flushing system of claim 5, further comprising a second liquid level sensor electrically connected to the control device, wherein the second liquid level sensor is configured to detect liquid in the toilet bowl;
the plurality of flushing modes comprises a fifth flushing mode, and when in the fifth flushing mode, the control device is configured to:

control the on-off assembly to open the first spray washing pipe and the second spray washing pipe for a second predetermined flushing time, before the emptying of the toilet bowl is started, when the second liquid level sensor detects that the liquid in the toilet bowl reaches a fourth predetermined liquid level, wherein the second predetermined flushing time is greater than the first predetermined flushing time;
continuously open the first spray washing pipe and the second spray washing pipe when the toilet bowl is being emptied;
close the first spray washing pipe and the second spray washing pipe before the emptying of the toilet bowl is completed; and
control the first spray washing pipe or the second spray washing pipe to open after the emptying of the toilet bowl is completed, and close the first spray washing pipe or the second spray washing pipe when the water in the toilet bowl reaches the first predetermined liquid level.

8. The flushing system of any one of claims 1 to 7, further comprising a pressurizing device connected to the first spray washing pipe and the second spray washing pipe, wherein the pressurizing device is configured to pressurize water to be input into the first spray washing pipe and the second spray washing pipe.

9. The flushing system of any one of claims 1 to 7, further comprising a tank body for storing a gas-liquid mixture, wherein the tank body comprises an air inlet for introducing gas, a water inlet for introducing liquid, and a mixture outlet; and the flushing system further comprises an air pump connected to the air inlet and/or a booster pump connected to the water inlet, and the mixture outlet is connected to input ends of the first spray washing pipe and the second spray washing pipe.

10. The flushing system of any one of claims 1 to 7, wherein the first spray washing pipe is configured to be arranged at a front end of the toilet bowl, and the second spray washing pipe is configured to be arranged at a rear end of the toilet bowl.

11. The flushing system of any one of claims 1 to 7, further comprising a suction device electrically connected to the control device, wherein the suction device is configured to be connected to the toilet bowl and to empty excrement within the toilet bowl.

12. The flushing system of claim 11, further comprising a backflow prevention device provided at an outlet of the suction device, wherein the backflow prevention valve is mounted at the outlet of the suction device by a magnetic attraction element;
the backflow prevention valve is configured to automatically open under a push of a sucked object when the suction device is operating, and to automatically close when the suction device stops operating.

13. The flushing system of any one of claims 1 to 7, wherein the control device further comprises a control panel provided with a plurality of buttons, wherein the plurality of buttons are configured to receive an operation of a user and to trigger a corresponding flushing command to activate a corresponding flushing mode.

14. A toilet device, comprising: a toilet body, and the flushing system of any one of claims 1 to 13, which is mounted in cooperation with the toilet body;
wherein the toilet body comprises a toilet bowl, the toilet bowl is provided with a first spray washing port and a second spray washing port; the first spray washing pipe and the second spray washing pipe of the flushing system are respectively mounted in cooperation with the first spray washing port and the second spray washing port.

15. The flushing method of claim 14, wherein the first spray washing port and the second spray washing port are both arranged at an upper portion of the toilet bowl, the first spray washing port is arranged at a front portion of the toilet bowl, and the second spray washing port is arranged at a rear of the first spray washing port.

16. A flushing method for a toilet, wherein the flushing system according to any one of claims 1 to 13 is used for flushing, the flushing method comprising:

controlling the flushing system to be in any of a plurality of flushing modes according to different flushing commands received;
wherein the plurality of flushing modes comprise at least one of a first flushing mode and a second flushing mode, and further comprise a third flushing mode;
when the flushing system is in the first flushing mode, opening the first spray washing pipe or the second spray washing pipe after the emptying of the toilet bowl is completed;
when the flushing system is in the second flushing mode, opening the first spray washing pipe before the emptying of the toilet bowl is started, and opening the first spray washing pipe or the second spray washing pipe after the emptying of the toilet bowl is completed; and
when the flushing system is in the third flushing mode, opening the first spray washing pipe and the second spray washing pipe before the emptying of the toilet bowl is started, and opening the first spray washing pipe or the second spray washing pipe after the emptying of the toilet bowl is completed.

17. The flushing method of claim 16, wherein when a first flushing command is received, the flushing system is controlled to be in the first flushing mode, wherein in the first flushing mode,

the toilet bowl is controlled to be emptied, and the first spray washing pipe or the second spray washing pipe is controlled to open after the emptying of the toilet bowl is completed; and
when water in the toilet bowl reaches a first predetermined liquid level, the first spray washing pipe or the second spray washing pipe is closed.

18. The flushing method of claim 16, wherein when a second flushing command is received, the flushing system is controlled to be in the second flushing mode, wherein in the second flushing mode,

the first spray washing pipe is controlled to open, before the emptying of the toilet bowl is started, and the first spray washing pipe is closed when water in the toilet bowl reaches a second predetermined liquid level; and
the toilet is controlled to be emptied, and the first spray washing pipe or the second spray washing pipe is controlled to open after the emptying of the toilet bowl is completed, and the first spray washing pipe or the second spray washing pipe is closed when water in the toilet bowl reaches a first predetermined liquid level.

19. The flushing method of claim 18, wherein when a third flushing command is received, the flushing system is controlled to be in the third flushing mode, wherein in the third flushing mode,

the first spray washing pipe and the second spray washing pipe are controlled to open for a first predetermined flushing time;
the toilet is controlled to be emptied, and the first spray washing pipe and the second spray washing pipe are continuously opened for a first predetermined duration when the toilet bowl is being emptied, and the first spray washing pipe and the second spray washing pipe are closed before the emptying of the toilet bowl is completed; and
the first spray washing pipe or the second spray washing pipe is controlled to open after the emptying of the toilet bowl is completed, and the first spray washing pipe or the second spray washing pipe is closed when water in the toilet bowl reaches the first predetermined liquid level.

20. The flushing method of claim 19, wherein the plurality of flushing modes comprises a fourth flushing mode;

the flushing method further comprises: controlling the flushing system to be in the fourth flushing mode when a fourth flushing command is received, wherein in the fourth flushing mode,
the first spray washing pipe and the second spray washing pipe are controlled to open and flush for a first predetermined flushing time before the emptying of the toilet bowl is started;
the toilet is controlled to be emptied, and the first spray washing pipe and the second spray washing pipe are continuously opened for a second predetermined duration when the toilet bowl is being emptied, wherein the second predetermined duration is greater than the first predetermined duration;
the first spray washing pipe and the second spray washing pipe are closed before the emptying of the toilet bowl is completed; and
the first spray washing pipe or the second spray washing pipe is controlled to open after the emptying of the toilet

bowl is completed, and the first spray washing pipe or the second spray washing pipe is closed when water in the toilet bowl reaches the first predetermined liquid level.

21. The flushing method of claim 20, wherein the plurality of flushing modes comprises a fifth flushing mode;

the flushing method further comprises: controlling the flushing system to be in the fifth flushing mode when a fifth flushing command is received, wherein in the fifth flushing mode,
when liquid in the toilet bowl reaches a fourth predetermined liquid level, the first spray washing pipe and the second spray washing pipe are opened for a second predetermined flushing time, wherein the second predetermined flushing time is greater than the first predetermined flushing time;
the toilet is controlled to be emptied, and the first spray washing pipe and the second spray washing pipe are continuously opened when the toilet bowl is being emptied, and the first spray washing pipe and the second spray washing pipe are closed before the emptying of the toilet bowl is completed; and
the first spray washing pipe or the second spray washing pipe is controlled to open after the emptying of the toilet bowl is completed, and the first spray washing pipe or the second spray washing pipe is closed when water in the toilet bowl reaches the first predetermined liquid level.

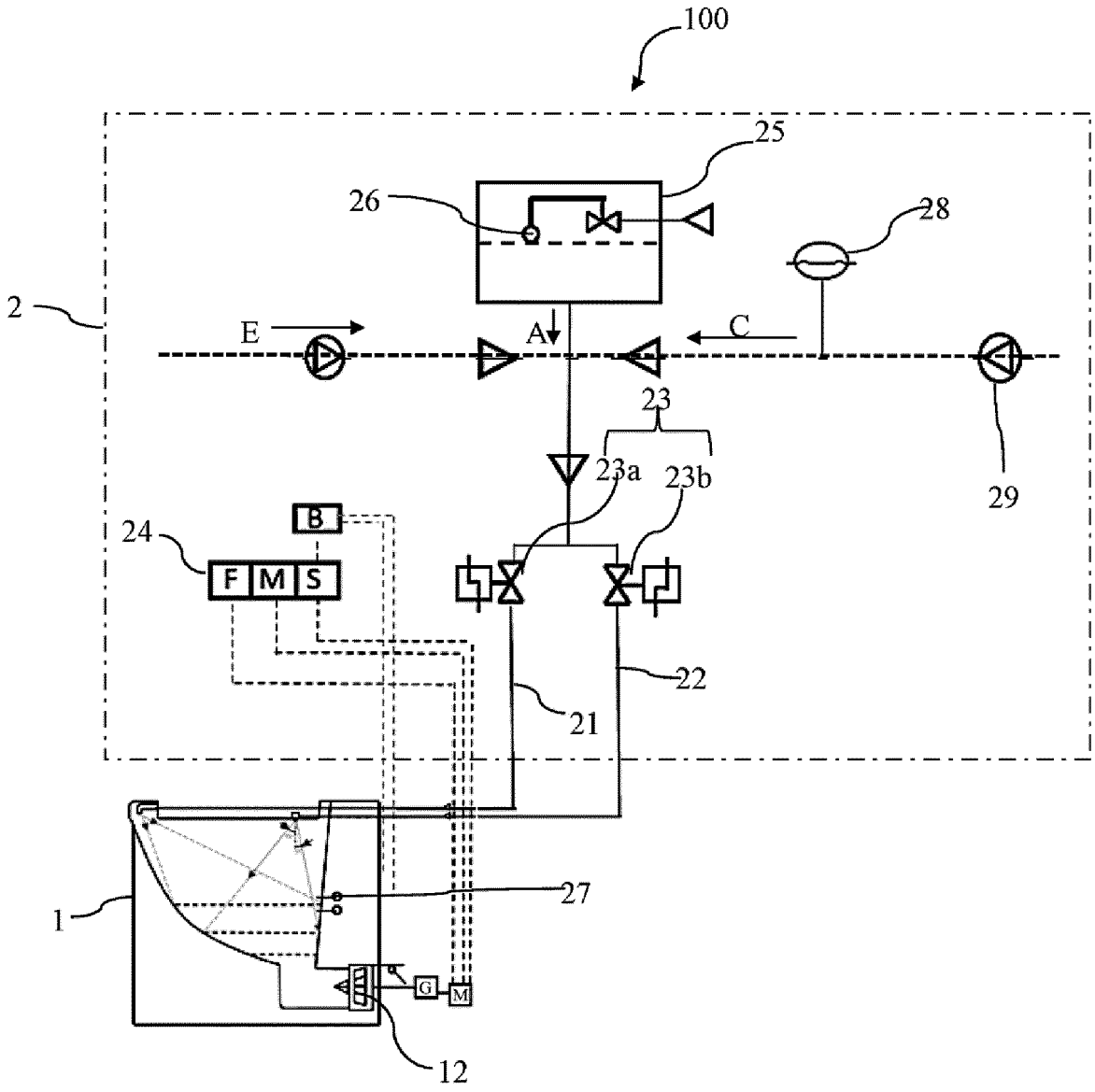

FIG. 1

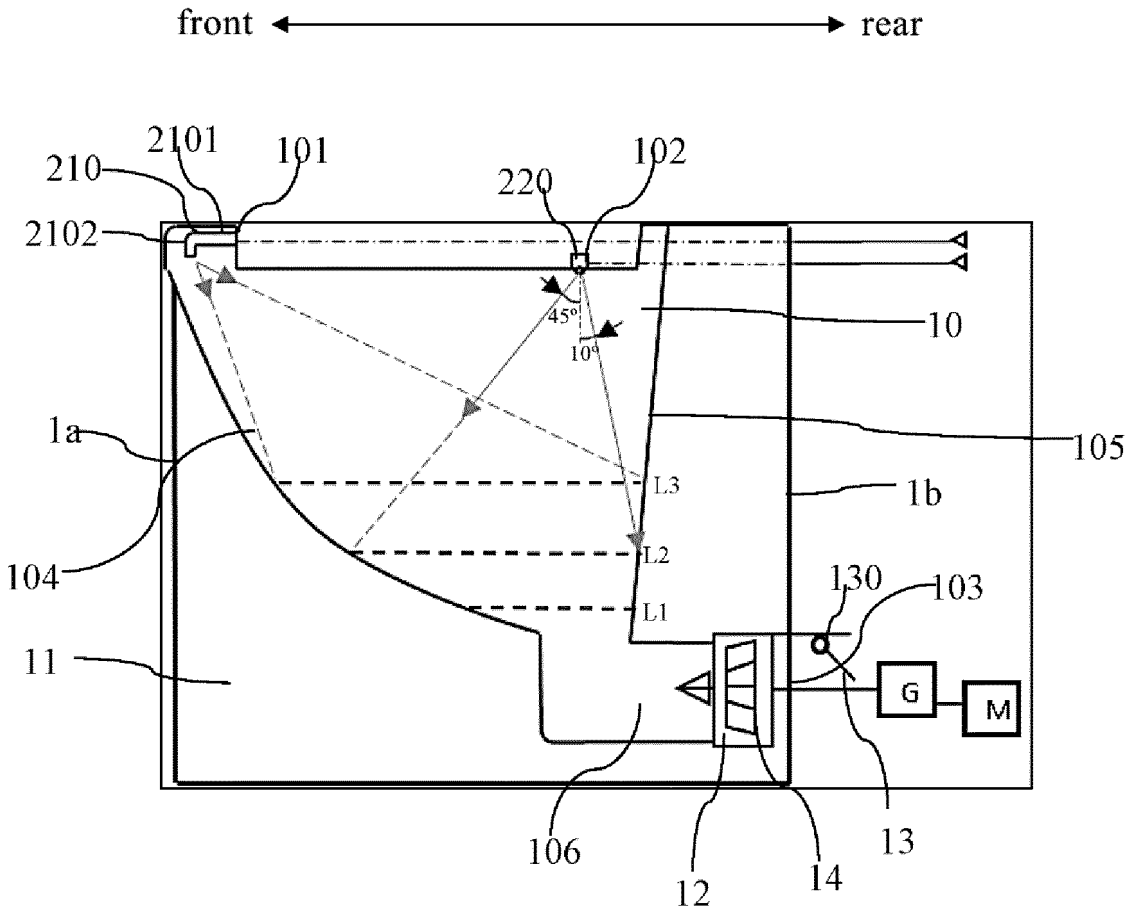
front
rear
2101
101
210
220
102
2102
45°
10°
10
105
1a
L3
1b
104
L2
130
103
L1
11
G
M
106
12
14
13

FIG. 2

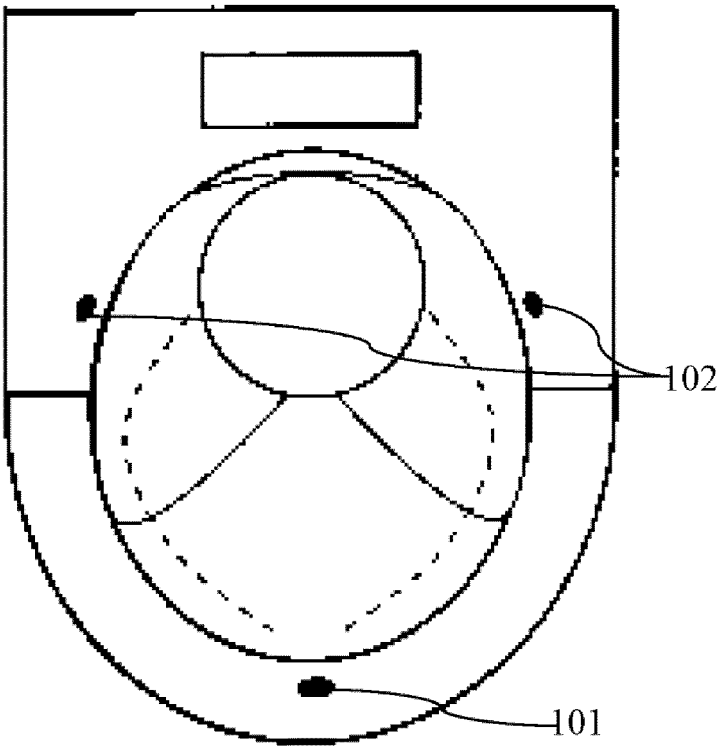

FIG. 3

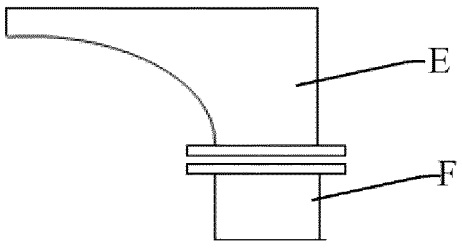

FIG. 4

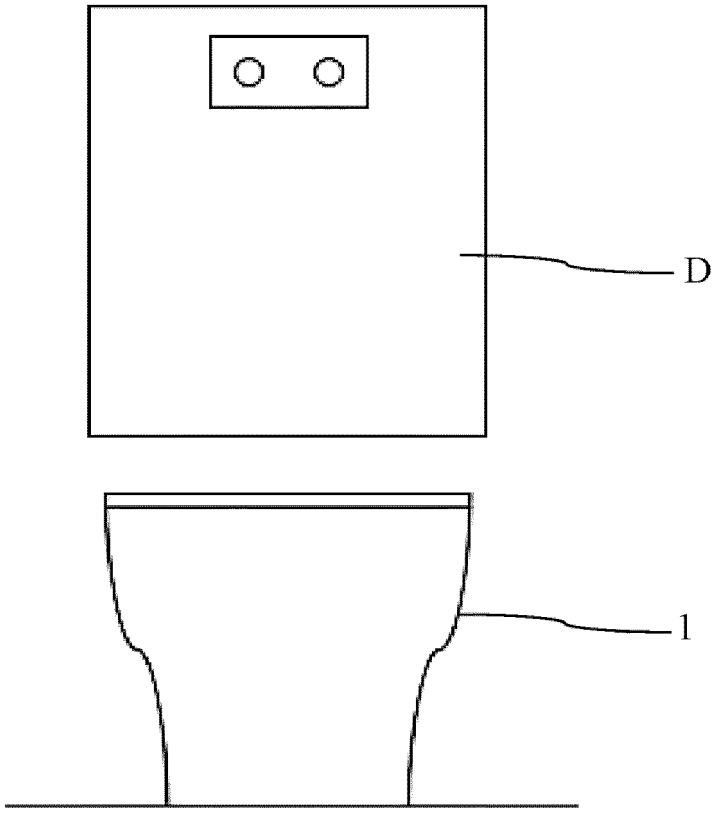

FIG. 5

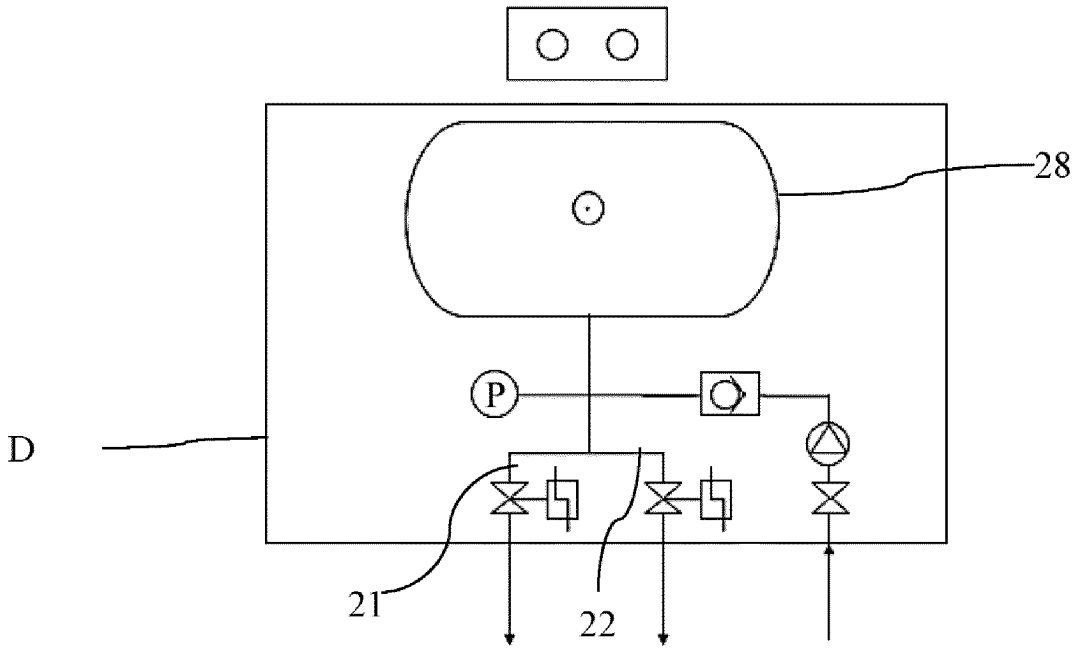

FIG. 6

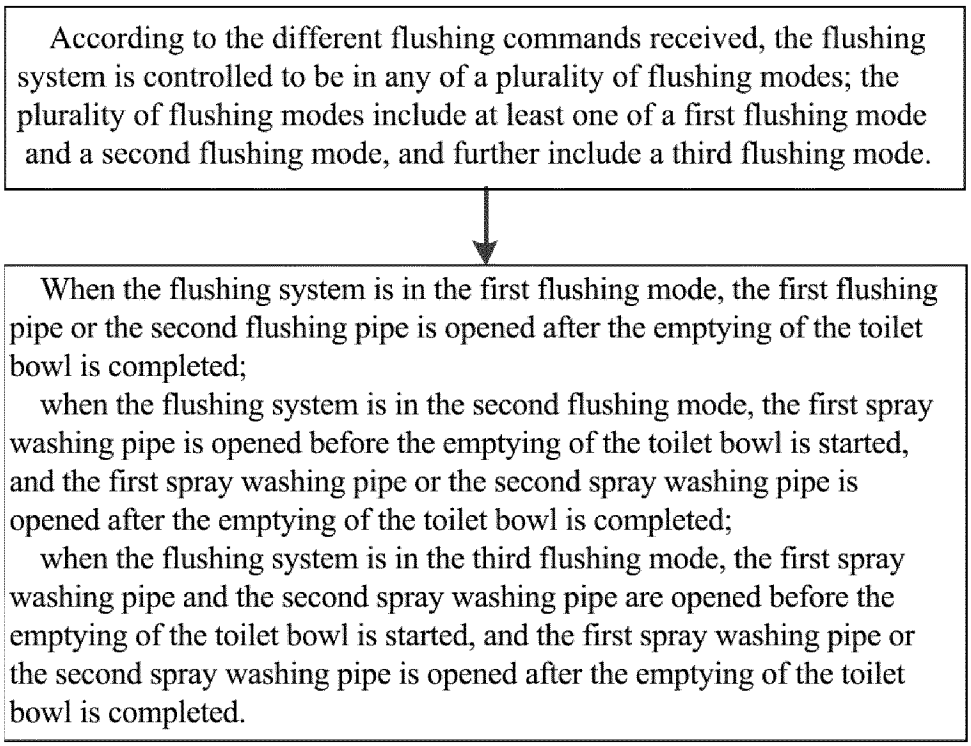
According to the different flushing commands received, the flushing system is controlled to be in any of a plurality of flushing modes; the plurality of flushing modes include at least one of a first flushing mode and a second flushing mode, and further include a third flushing mode.
When the flushing system is in the first flushing mode, the first flushing pipe or the second flushing pipe is opened after the emptying of the toilet bowl is completed;
when the flushing system is in the second flushing mode, the first spray washing pipe is opened before the emptying of the toilet bowl is started, and the first spray washing pipe or the second spray washing pipe is opened after the emptying of the toilet bowl is completed;
when the flushing system is in the third flushing mode, the first spray washing pipe and the second spray washing pipe are opened before the emptying of the toilet bowl is started, and the first spray washing pipe or the second spray washing pipe is opened after the emptying of the toilet bowl is completed.

FIG. 7

INTERNATIONAL SEARCH REPORT

International application No.
PCT/CN2023/105275

A. CLASSIFICATION OF SUBJECT MATTER

E03D1/14(2006.01)i

According to International Patent Classification (IPC) or to both national classification and IPC

B. FIELDS SEARCHED

Minimum documentation searched (classification system followed by classification symbols)

IPC:E03D1; E03F1; E03D11

Documentation searched other than minimum documentation to the extent that such documents are included in the fields searched

Electronic data base consulted during the international search (name of data base and, where practicable, search terms used)

CNTXT, CJFD, ENTXTC, ENTXT, VEN: 马桶, 坐便, 座便, 表面, 策略, 侧壁, 场景, 喷, 清, 洗, 冲, 固体, 大便, 粪, 液体, 小便, 方式, 类型, 模式, 型式, 男, 女, 内壁, 内部, 内侧, 内腔, 尿, 排, 排空, female, male, man, men, woman, women, mode, model, pattern, urinat+, fece?, urine, defecat+, flush+, wash+, jet?

C. DOCUMENTS CONSIDERED TO BE RELEVANT

Category*	Citation of document, with indication, where appropriate, of the relevant passages	Relevant to claim No.
PX	CN 115404957 A (JOMOO KITCHEN & BATH CO., LTD.) 29 November 2022 (2022-11-29) description, specific embodiments, and figures 1-6	1-21
X	JP 2007224524 A (MATSUSHITA ELECTRIC WORKS, LTD.) 06 September 2007 (2007-09-06) description, paragraphs [0015]-[0033], and figures 1-7	1-21
Y	CN 108301475 A (XI'AN UNIVERSITY OF SCIENCE AND TECHNOLOGY) 20 July 2018 (2018-07-20) description, paragraphs [0020]-[0040], and figures 1-4	1-21
Y	JP 2009084779 A (TOTO LTD.) 23 April 2009 (2009-04-23) description, specific embodiments, and figures 1-15	1-21
A	CN 108331128 A (XI'AN UNIVERSITY OF ARCHITECTURE AND TECHNOLOGY) 27 July 2018 (2018-07-27) entire document	1-21

☑ Further documents are listed in the continuation of Box C. ☑ See patent family annex.

* Special categories of cited documents:
"A" document defining the general state of the art which is not considered to be of particular relevance
"D" document cited by the applicant in the international application
"E" earlier application or patent but published on or after the international filing date
"L" document which may throw doubts on priority claim(s) or which is cited to establish the publication date of another citation or other special reason (as specified)
"O" document referring to an oral disclosure, use, exhibition or other means
"P" document published prior to the international filing date but later than the priority date claimed
"T" later document published after the international filing date or priority date and not in conflict with the application but cited to understand the principle or theory underlying the invention
"X" document of particular relevance; the claimed invention cannot be considered novel or cannot be considered to involve an inventive step when the document is taken alone
"Y" document of particular relevance; the claimed invention cannot be considered to involve an inventive step when the document is combined with one or more other such documents, such combination being obvious to a person skilled in the art
"&" document member of the same patent family

Date of the actual completion of the international search	Date of mailing of the international search report
07 November 2023	**09 November 2023**

Name and mailing address of the ISA/CN	Authorized officer
China National Intellectual Property Administration (ISA/CN) **China No. 6, Xitucheng Road, Jimenqiao, Haidian District, Beijing 100088**	Telephone No.

Form PCT/ISA/210 (second sheet) (July 2022)

INTERNATIONAL SEARCH REPORT

International application No.
PCT/CN2023/105275

C. DOCUMENTS CONSIDERED TO BE RELEVANT

Category*	Citation of document, with indication, where appropriate, of the relevant passages	Relevant to claim No.
A	CN 108360631 A (XI'AN UNIVERSITY OF SCIENCE AND TECHNOLOGY) 03 August 2018 (2018-08-03) entire document	1-21
A	CN 113653140 A (JOMOO KITCHEN & BATH CO., LTD.) 16 November 2021 (2021-11-16) entire document	1-21
A	CN 201560477 U (REN SHENGFENG) 25 August 2010 (2010-08-25) entire document	1-21
A	CN 202755423 U (HE GUOQING) 27 February 2013 (2013-02-27) entire document	1-21
A	CN 202850171 U (SHANDONG HUATENG ENVIRONMENTAL PROTECTION AUTOMATION CO., LTD.) 03 April 2013 (2013-04-03) entire document	1-21
A	JP S6452928 A (INAX CORP.) 01 March 1989 (1989-03-01) entire document	1-21
A	KR 20100071911 A (SHIN NAM SIK) 29 June 2010 (2010-06-29) entire document	1-21

Form PCT/ISA/210 (second sheet) (July 2022)

INTERNATIONAL SEARCH REPORT
Information on patent family members

International application No.
PCT/CN2023/105275

Patent document cited in search report	Publication date (day/month/year)	Patent family member(s)	Publication date (day/month/year)
CN 115404957 A	29 November 2022	None	
JP 2007224524 A	06 September 2007	JP 4882410 B2	22 February 2012
CN 108301475 A	20 July 2018	None	
JP 2009084779 A	23 April 2009	None	
CN 108331128 A	27 July 2018	None	
CN 108360631 A	03 August 2018	None	
CN 113653140 A	16 November 2021	None	
CN 201560477 U	25 August 2010	None	
CN 202755423 U	27 February 2013	None	
CN 202850171 U	03 April 2013	None	
JP S6452928 A	01 March 1989	JP 2562911 B2	11 December 1996
KR 20100071911 A	29 June 2010	None	

Form PCT/ISA/210 (patent family annex) (July 2022)