AU9469520

(12) PATENT ABRIDGMENT (11) Document No. AU-B-69520/94
(19) AUSTRALIAN PATENT OFFICE (10) Acceptance No. 688329

(54) Title
PACKAGING SYSTEMS FOR INCREASED FOOD PRODUCT SHELF LIFE

International Patent Classification(s)
(51)[5] **B65B 031/02** **B65B 025/06** **B65D 077/20** **B65D 077/30**

(21) Application No. : **69520/94** (22) Application Date : **16.05.94**

(87) PCT Publication Number : **WO94/27868**

(30) Priority Data

(31) Number	(32) Date	(33) Country
064700	20.05.93	US UNITED STATES OF AMERICA
098530	08.07.93	US UNITED STATES OF AMERICA
154756	18.11.93	US UNITED STATES OF AMERICA
221194	31.03.94	US UNITED STATES OF AMERICA

(43) Publication Date : **20.12.94**

(44) Publication Date of Accepted Application : **12.03.98**

(71) Applicant(s)
WORLD CLASS PACKAGING SYSTEMS, INC.

(72) Inventor(s)
MICHAEL P GORLICH; ROBERT F MCPHERSON

(74) Attorney or Agent
GRIFFITH HACK , GPO Box 1285K, MELBOURNE VIC 3001

(56) Prior Art Documents
US 2880859
US 4346833
US 5007231

(57) Claim

1. A package comprising:

a tray;

a pliant first membrane sealed to said tray; and

a pliant second membrane sealed to said tray over said first membrane, said membranes being secured to separate locations on said tray such that said membranes are substantially coplanar with one another, said second membrane being removable from the tray independently of said first membrane, and said first and second membranes being in substantially continuous contact with one another wherein the second membrane is substantially impermeable.

11. A method for packaging a food product comprising the steps of:

filling a tray with a food product;

covering said tray with a pliant first membrane by severing from a web of material said first membrane in

.../2

place on said tray and sealing said membrane to said tray at a first location; and

covering said tray and said pliant first membrane with a pliant second membrane by severing said second membrane over said tray and sealing said second membrane to said tray at a second location outwardly of said first location.

OPI DATE 20/12/94 APPLN. ID 69520/94
AOJP DATE 27/01/95 PCT NUMBER PCT/US94/05525

AU9469520

INT.

(51) International Patent Classification 5 :
B65B 31/02, 25/06, B65D 77/20, 77/30

A2

(11) International Publication Number: WO 94/27868

(43) International Publication Date: 8 December 1994 (08.12.94)

(21) International Application Number: PCT/US94/05525

(22) International Filing Date: 16 May 1994 (16.05.94)

(30) Priority Data:

08/064,700	20 May 1993 (20.05.93)	US
08/098,530	8 July 1993 (08.07.93)	US
08/154,756	18 November 1993 (18.11.93)	US
08/221,194	31 March 1994 (31.03.94)	US

(71) Applicant *(for all designated States except US)*: WORLD CLASS PACKAGING SYSTEMS, INC. [US/US]; 86 Beach City Road, Hilton Head Island, SC 29925-4100 (US).

(72) Inventors; and

(75) Inventors/Applicants *(for US only)*: GORLICH, Michael, P. [US/US]; 86 Beach City Road, Hilton Head Island, SC 29925-4100 (US). McPHERSON, Robert, F. [US/US]; 86 Beach City Road, Hilton Head Island, SC 29925-4100 (US).

(74) Agent: TROP, Timothy, N.; Arnold, White & Durkee, P.O. Box 4433, Houston, TX 77210 (US).

(81) Designated States: AT, AU, BB, BG, BR, BY, CA, CH, CN, CZ, DE, DK, ES, FI, GB, HU, JP, KG, KP, KR, KZ, LK, LU, LV, MD, MG, MN, MW, NL, NO, NZ, PL, PT, RO, RU, SD, SE, SI, SK, TJ, TT, UA, US, UZ, VN, European patent (AT, BE, CH, DE, DK, ES, FR, GB, GR, IE, IT, LU, MC, NL, PT, SE), OAPI patent (BF, BJ, CF, CG, CI, CM, GA, GN, ML, MR, NE, SN, TD, TG).

Published

Without international search report and to be republished upon receipt of that report.

688329

(54) Title: PACKAGING SYSTEMS FOR INCREASED FOOD PRODUCT SHELF LIFE

(57) Abstract

A tray having a peripheral flange with one or more raised ledges to secure a pair of membranes to enclose the tray. A lower membrane may be attached to a first ledge of the flange. An upper membrane may be attached to a second ledge or a recessed lip of the flange without connection to the lower membrane, except through the tray. The two attachment surfaces may be separated by a trough or by being positioned on different levels to facilitate trimming of the upper membrane in a continuous manufacturing process. A method and apparatus for modified atmosphere packaging uses a rotary conveyor to transport a plurality of trays to be packaged between a plurality of stations in a circular arrangement. The trays may be loaded onto a receiving platform by depositing them over movable beds which can reciprocate downwardly in order to permit the trays to be removably held inside slots in a removable platform. Since the platform is removable from the conveyor, it may be centered in any particular station by lifting the platform from the conveyor and guiding it into a precise alignment at a particular station. The package may then be filled, its atmosphere replaced with one lower in oxygen content, and then the desired atmosphere sealed within the package. This can be done in the continuous fashion so that the film is severed from a continuous web. A package, packaging method, and packaging apparatus for facilitating the packaging of large meat products and exchanging the ambient atmosphere to establish a desired gaseous atmosphere that extends the shelf life of the product. The package includes a pair of preformed relatively rigid plastic domed or cupped members which abut along a sealing surface. The upper (318) and lower (310) package portions include flanges (312, 336) which are adapted to facilitate not only the formation of the package but its subsequent opening. A reciprocatable filling tube (320) maintains the separation between the upper and lower package portions to permit gas exchange and then may be reciprocated downwardly to allow the upper package portion to abut atop the lower package portion for sealing connection.

PACKAGING SYSTEMS FOR INCREASED FOOD PRODUCT SHELF LIFE

This invention relates to machines for packaging food products, packages and related methods such that the packaged product may be maintained in one condition under certain circumstances and then converted to another condition. For example, during transportation the food package might maintain an inert gaseous atmosphere and then, when the package reaches a supermarket or other retail outlet, the food package will permit exposure of the food product to the ambient atmosphere. While a wide variety of food products can be packaged in accordance with the teachings of this invention, it is particularly advantageous in connection with the packaging of meat in a modified atmosphere package such that the meat may be transported in a relatively inert atmosphere and then caused to bloom when it reaches a retail outlet by exposure to oxygen.

Historically, meat products have been butchered and packaged in each supermarket or other retail outlet. It has long been recognized that this arrangement is extremely inefficient and expensive. Instead, it would be preferable to permit the meat to be butchered and packaged at an efficient facility which benefits from economies of scale and thereafter shipped to individual supermarkets or other retail outlets.

In the past, this desirable goal has not been achievable because most consumers prefer to buy meat which is red in color as a result of exposure to oxygen. However, the meat maintains its red color for only one to two days. Thereafter, it turns to a purple color which is undesirable to most consumers. Therefore, if the meat was butchered and packaged in one location and then

shipped to another location for eventual sale, by the time the package reached the retail outlet the meat would have undergone the transformation to the purple color and would be effectively unsalable.

To overcome these problems, there have been a number of efforts to maintain the food product in a first atmosphere during shipping and a second atmosphere when the meat product is ready for retail sale. It is not believed that any of these techniques have yet achieved significant commercial acceptance. Therefore, it is highly desirable to provide a package that would permit remote meat preparation, and subsequent sale several days later.

One problem is that while the need for such a package is great, consumers may not be willing to invest much money in elaborate packages. Thus, it would be highly desirable to have a package that is convertible between two very different packaging conditions, and yet is very economical. Moreover, it is also advantageous for the package to look similar to packages to which consumers are currently accustomed.

One attempted solution to these problems is to use a dual layer cover over a plastic package containing the meat product. The upper cover is gas impermeable and may be removed to expose a lower cover that is air permeable. Thus, the package may be shipped with the upper cover intact so that a inert gaseous atmosphere may be maintained within the package during shipping. Then the upper cover may be removed at the supermarket leaving the lower cover. Since the lower cover is oxygen permeable, it allows the meat to bloom in the presence of oxygen.

Conventionally, such dual layer packages have been implemented by adhesively securing the upper layer to the lower layer and thereafter heat sealing or otherwise securing both layers to the package itself. For example, when the upper layer is removed the adhesive may be retained on the lower layer,

interfering with the ability of the lower layer to pass oxygen. Also, when removing the top layer it may be difficult to avoid tearing or otherwise removing the lower layer. Moreover, it is difficult to produce such a package with controlled delamination of the two layers.

While various elaborate techniques have been conceived for avoiding the interference between the layers, these approaches generally add cost and complexity to the packaging. Moreover, the removal of the upper layer (which is sealed to the lower layer) without removing the lower layer is problematic. Although attempts have been made to overcome these problems, no commercially viable solution has been achieved.

Domed meat packages have been used in the past to contain large cuts of meats such as chickens or roasts. However, these packages have suffered from a number of drawbacks.

It is desirable to control the atmosphere within the meat package to delay the aging of the food product and to extend its shelf life in the supermarket. For example, by providing low oxygen environments, the shelf life of the food product can be extended from a few days to as long as two weeks or more perhaps.

In order to make the customer feel comfortable with the food packaging, the customer should be able to view a substantial portion of the food product. In order to maintain a desired atmosphere around the package, a package which is somewhat larger than the food product is required. However, with a large, relatively heavy meat product it is difficult to allow for spacing around the food product and yet maintain the product in an attractive fashion within the container.

Moreover, since the consumer would normally desire that he or she be able to see the food product, the spacing becomes visible to the consumer. The consumer may believe that the package is too large and wasteful. Moreover, if

the product is substantially larger than the food product, the food product may move around during transportation and handling, and the package itself may be indented or otherwise damaged.

In the past, deep draw packages may have been used for this type of packaging. However, deep draw packages become difficult to form at large sizes and may experience significant deformation of the packaging material. These packages are particularly susceptible to the formation of thin spots and to the indenting and collapsing of the corner regions.

United States Patent No. US 4909022 discloses a nest for receiving a container which is to be filled and thereafter have a lid applied thereto, with the lid being sealed to the container by a sealing head in conjunction with the nest. A series of vacuum nozzles are used to grab and lift up an upper cover of the container, in order to facilitate the filling of the container with a gas. United States Patent No. US 2423975 discloses a packaging apparatus in which a container is provided with a loose cover thereon. Once the container is placed in position, a bell is lowered over the container to provide a chamber within which the container can be subjected to a gas-filling operation.

International Patent Application No. WO91/03407 discloses a packaging for perishable goods which comprises a clear plastics material lid over a base, with the lid sealing the packaging. German Patent Application No. DT 1810958 discloses an item of packaging which has a peel-off lid attached to a base. Both the lid and base have differently-sized tabs attached thereto, so that the tab of the lid is readily accessible.

United States Patent No. US 3508373 discloses a method of evacuating air from a package and replacing it with another gas. Air is removed from the package via an opening at one side of the package and subsequently the other gas is introduced into the package at a point remote from the opening, with suction being applied to the opening. United States Patent No. US 3225889 discloses a packaging machine including a horizontal loading wheel having a series of circumferential apertures adapted to support open containers to be filled.

AUSTRALIAN PATENT OFFICE
13

European Patent Application No. 32820 discloses a method of packaging a product in which gas is removed from a container leaving a head space in the container. Subsequently, the opening through which the gas was removed is closed and the closure is deformed inwardly onto the product to reduce the head space until the head space is eliminated. United States Patent No. US 3561668 discloses a double sealed package including a container with an inner cover member spanning its open end. An outer cover is sealed to both the container flange and the inner cover member. UK Patent Application No. GB 2251540 discloses a process for preserving a food product comprising introducing the food product into a tray having side wall steps to form both a first and second support service extending round the tray. A microsporous in a lid is affixed to the first support service, the food product is heated in the tray and then allowed to cool, and the tray is then sealed by affixing an outer lid to the second support service.

The present invention addresses one or more of the above identified desiderata.

According to a first broad aspect of the present invention there is provided a package comprising:

a tray;

a pliant first membrane sealed to said tray; and

a pliant second membrane sealed to said tray over said first membrane, said membranes being secured to separate locations on said tray such that said membranes are substantially coplanar with one another, said second membrane being removable from the tray independently of said first membrane, and said first and second membranes being in substantially continuous contact with one another wherein the second membrane is substantially impermeable.

Preferably said tray includes a peripheral flange including a ledge and a recessed lip surrounding the ledge

AUSTRALIAN PATENT OFFICE 13

to secure the first and second membranes, respectively.

Preferably said tray includes a pair of substantially coplanar sealing ledges for securing said first and second membranes.

Preferably second membrane is less permeable than the first membrane to gases.

Preferably said first and second membranes comprise a substantially impermeable material.

Preferably first and second membranes comprise a resilient material.

According to a second broad aspect of the present invention there is provided a method for packaging a food product comprising the steps of:

filling a tray with a food product;

covering said tray with a pliant first membrane by severing from a web of material said first membrane in place on said tray and sealing said membrane to said tray at a first location; and

covering said tray and said pliant first membrane with a pliant second membrane by severing said second membrane over said tray and sealing said second membrane to said tray at a second location outwardly of said first location.

Preferably said first membrane is severed in place on said tray over a depression in said tray.

Preferably said first membrane is sealed to said tray and then severed from said tray.

Figure 1 is a plan view of one embodiment of a package 10 in accordance with the present invention;

Figure 2 is an enlarged side cross-sectional view of the package 10, taken along the line 2-2 of Figure 1;

Figure 3 is a plan view of another embodiment of the package 10 in accordance with the present invention;

AUSTRALIAN PATENT OFFICE 13

Figure **4** is an enlarged side cross-sectional view of the package **10**, taken along the line **3-3** of Figure **3**;

Figure **5** is a schematic view showing a method for assembling the package **10** of Figure **1**;

Figure **6** is a cross-sectional view taken generally along the line **6-6** in Figure **7**;

Figure **7** is a front elevational view of the embodiment shown in Figure **6**;

Figure **8** is an enlarged top plan view of a portion of the embodiment shown in Figure **6**, showing the loading area receiving trays to be packaged;

Figure **9** is a front elevational view of the portion shown in Figure **8**;

Figure **10** is a front elevational view corresponding to that shown in Figure **9** after a row of trays has been positioned atop a receiving platform;

Figure **11** is a top plan view of the portion shown in Figure **10**;

Figure **12** is a vertical, cross-sectional view partially broken away so as to show two rather than four stations and with vacuum and gas supplying means removed;

Figure **13** is a view corresponding to Figure **12** after the platform has been removed from the rotary arms;

Figure **14** is an enlarged, plan view of the quick disconnect tooling at the station **122c**;

Figure **15** is an enlarged, cross-sectional view taken generally along the line **15-15** in Figure **14**;

Figure **16** is a partial, side elevational view of the unloading station;

Figure **17** is a partial, side elevational view of the unloading station after a platform has been raised to an "up" position;

Figure **18** is a top plan view of the embodiment shown in Figure **17** after the trays have been pushed onto the unloading conveyor;

Figure **19** is an enlarged, partial, cross-sectional view of the bottom of the surge tank;

Figure **20** is a simplified cross-sectional view showing three stages in one embodiment of a packaging process in accordance with the present invention;

Figure **21** is a partial, enlarged, top plan view of the package shown in Figure **20a**;

Figure **22** is a partial, enlarged, top plan view of the package shown in Figure **20b**;

Figure **23** is an enlarged, cross-sectional view of one embodiment of a packaging apparatus for accomplishing the process steps shown in Figure **20b**;

Figure **24** is an enlarged, cross-sectional view of the packaging apparatus of Figure **23**, shown in position to accomplish the process steps shown in Figure **20c**; and

Figure **25** is an enlarged, top plan view of another embodiment of the package shown in the position illustrated in Figure **20b**.

Referring to the drawings, wherein like reference characters are used for like parts throughout the several views, a package **10** for containing one or more food products "A" is shown (Figures 1-2). The package **10** is especially advantageous for containing red meat. The package **10** includes a relatively rigid tray **12**, a more permeable membrane **14**, and a less permeable membrane **16**. The membranes **14** and **16** are peripherally connected to the tray **12**.

The tray **12** may be made of a relatively rigid plastic, formed by thermomolding or the like. The tray is preferably made of a material which is gas impermeable, and may be composed of a single polymeric sheet such as polyvinyl chloride, nylon, fluorohalocarbon, polyurethane or a composite of polymeric materials including: PVC; PVC and polyolefin; PVC and saran; PVC and saran and polyolefin; PVC, saran, ethylenevinylacetate copolymer; polystyrene, saran and polyolefin; polystyrene, saran and copolymer; nylon, saran, polyolefin; polyolefin, saran and polyethylene; polyester, saran, polyolefin; polycarbonate, saran and polyolefin; or many other materials which are well known in the art. Advantageously, the tray **12** is preferably formed of a material that forms a good oxygen barrier, has adequate thermoformability, is sufficiently strong, and facilitates the attachment of other materials to the tray.

Although the tray **12** is shown in the illustrated embodiment as being generally rectangular, other shapes of the tray **12**, such as a round form (not shown), are contemplated in accordance with the invention. The tray **12** includes a curved base **18** which defines a cavity for receiving the food product **A**, and a double flanged edge **20** which extends around the periphery of the base **18**.

The double flanged edge **20** defines a pair of ledges **22** and **24** separated by a trough **26**. The outermost edge **28** of the flange **20** may be turned downwardly.

In an illustrative embodiment, the base **18** and the flange **20** may be molded as a single piece. In an exemplary embodiment, upper surfaces of the ledges **22** and **24** may be positioned in a single plane, such that the ledges **22** and **24** and the membranes **14** and **16** provide a substantially flat surface on top of the package **10**. In this regard, the tray **12** may be formed from a porous, foam-like material that is heat pressed to ensure uniformity in the height of the ledges **22**, **24** and the thickness of the tray **12**. Such a flat surface facilitates a more reliable connection to the membranes **14**, **16**, and also permits multiple packages to be easily stacked on top of each other.

The more permeable layer **14** preferably comprises a flexible, resilient material such as a pliant plastic substance, to permit gaseous exchange therethrough as required by the particular application. In connection with the blooming of red meat, it is generally desirable that the more permeable membrane **14** be highly transmissive of ambient atmosphere. A wide variety of materials are capable of acting as the membrane **14**, including polyvinyl chloride, polycarbonate, cellophane, polypropylene, polyethylene, polyethylene copolymers, ionomer film or any other gas permeable materials which are well known in the art. The membrane **14** may also be constructed of microporous films which have holes formed either chemically or mechanically. The membrane **14** need only be sufficiently strong to prevent perforation in use.

The membrane **14** is secured to the tray **12** at the inner ledge **24**. In this regard, it is desirable that the membrane **14** be of a material that is heat sealable to the tray **12**. However, it is also possible to adhesively secure the peripheral edge of the membrane **14** to the inner ledge **24**. As used herein, the film is "sealed" to the tray, signifying that it is heat fused or adhesively secured to the tray as opposed to being frictionally connected thereto. Between the ledges **22** and **24**, a trough **26** is defined. The trough **26** aids in securing the membrane **14** to the inner ledge **24**. In particular, after the membrane **14** is stretched over the tray **12** and the ledges **22**, **24**, the membrane **14** is secured to the inner ledge **24**, then trimmed by moving a cutting press downwardly through the membrane **14** and into

the trough **26** as explained later. Although the trough **26** has a "U"-shape in Figure 2, it is also understood that the trough **26** may assume a "V"-shape, a semi-circular shape, a rectangular shape, or another suitable shape that may be desired for aesthetic, functional, or other reasons.

The less permeable membrane **16** also preferably comprises a flexible, resilient material such as a pliant plastic substance. However, the membrane **16** is preferably selected from a group of materials that are relatively less gas permeable, such as polyester, nylon, cellophane, polypropylene, polyvinyl acetate, saran, or combinations of these materials. Advantageously, the less permeable membrane **16** is impermeable to gases.

The less permeable membrane **16** is removably secured to the outer ledge **22**, again by heat sealing, adhesive techniques, or other techniques known in the art. After the less permeable membrane **16** is secured to the outer ledge **22**, the membrane **16** may be trimmed by moving a cutting press downward through the membrane **16**, at a position outward from the outermost edge **28** as explained later. Alternatively, if desired, the membrane **16** may be trimmed before sealing it to the outer ledge **22**. In either case, the membrane **16** is preferably trimmed to leave an overhang **19**, to facilitate later removal of the membrane **16** by lifting the overhang **19** and peeling the membrane **16** back from its connection to the outer ledge **22**. The less permeable membrane **16**, when secured to the ledge **22**, is totally free of any connection to the more permeable membrane **14**, except frictional connection or indirect connection through the tray **12**. This facilitates the convenient removal of the less permeable membrane **16** from the package while leaving the more permeable membrane **14** in place and undisturbed. Although the membranes **14**, **16** are not connected to each other, the membranes **14**, **16** are substantially coplanar to each other, in face to face abutment, each advantageously being under slight resilient tension.

After both the membranes **14** and **16** are secured to the tray **12**. a desirable atmosphere may be maintained within the package **10** for the benefit of the food product **A** contained therein. This may be done by sealing the package closed in the desired atmosphere. In the case of red meat products, the initial atmosphere in some embodiments may contain a relatively low concentration of oxygen. For example, gases including substantial concentrations of carbon dioxide or nitrogen may be maintained with the package to reduce the exposure of the food product **A** to oxygen. In the case of meat products, this forestalls the blooming of the meat product until a later time.

When the product reaches a supermarket or other retail outlet, it may be desirable to remove the less permeable membrane **16**. This is conveniently done by grasping the edge of the upper membrane **16** and pulling it upwardly. Since the membrane **16** is not connected to the membrane **14**, it may be easily removed from the remainder of the package **10**.

Thereafter, the package **10** exists without the less permeable membrane **16**, and includes only the more permeable membrane **14** and the tray **12**. In embodiments containing meat products, it may be desirable to allow oxygen transmission through the more permeable membrane **14** to cause blooming of the meat product. Thus, in the store, once the less permeable membrane **16** has been removed, the red meat product **A** can be caused to turn red or bloom in the presence of a higher concentration of oxygen.

In an alternate embodiment, both membranes **14**, **16** may be formed from substantially impermeable materials, for use in certain applications. This arrangement may be useful, for example, to provide alternative labeling schemes. With such an embodiment, the lower membrane may contain a label of a supermarket or other retail store, such as an advertising label; the upper membrane, on the other hand, may display a label from an initial meat packer, providing instructions to the retail butcher rather than the ultimate buyer of the

meat. Then the outer membrane **16** may be easily removed relative to the inner membrane **14**.

Referring to Figures 3-4, an alternate embodiment of the package **10** will be described. In particular, this embodiment contemplates a ledge **52**, surrounded by a recessed lip **54** having an outermost edge **56**. In this embodiment, the more permeable membrane **14** is first secured to the ledge **52**, and then trimmed by moving a cutting press downwardly through the membrane **14** at a position radially outward from the ledge **52**, as permitted by the recessed lip **54**. Subsequently, the less permeable membrane **16** is stretched over the tray **12** and adhered to the lip **54**. The less permeable membrane **16** is trimmed by moving a cutting press (not shown) downward through the membrane **16** at a position outward from the outermost edge **56**. Thus, the less permeable membrane **16** is provided with a larger surface area than the more permeable membrane **14**, such that the membrane **16** overlaps the membrane **14**. The membrane **16** may be cut to provide an overhang **58**, such that the less permeable membrane **16** may be easily removed by lifting the overhang **58** and peeling the membrane **16** back from its connection with the edge **56**. Moreover, the membranes **14**, **16** are substantially coplanar with each other, in face to face abutment, each being under slight resilient tension.

In this embodiment, the desired atmosphere may be maintained within the package **10**, in the same manner as described above in conjunction with the previous embodiment. When the product reaches a supermarket or other retail market, the less permeable membrane **16** may be removed by conveniently grasping the overhang **58** of the membrane **16** in pulling it upward. Thereafter, the package **10** exists without the less permeable membrane **16** and includes only the more permeable membrane **14** and the tray **12**, as with the embodiment described previously.

Referring to Figure 5, an exemplary process for forming the package **10** will be explained. Starting at the right side of Figure 5, a tray **12**, held from below in a rigid conforming carrier **60**, is filled in a conventional fashion with a food product **A**. Next, the package **10** is evacuated of oxygen and gas back-filled with a transportation gas which is lower in oxygen content. A web **70** of the more permeable membrane **14** is unwound from a pair of rolls **62** and **64** and positioned over the tray **12**. The more permeable web **70** is secured to the inner ledge **24**, for example by a heat sealing machine **66**. Thereafter, a conventional cutting press **68** is used to cut the web **70**. In the embodiment of Figures 1-2, the web **70** is cut at a position adjacent to the trough **26**. With the product of Figures 3-4, the web **70** is cut at a position over the recessed lip **54**, the lip itself acting as a trough or depression. In either case, it should be clear that the trough **26** or lip **54** facilitates the removal or cutting of the membrane **14** from the web **70** in place on the package **10**. The web **70** may also be severed by using heat or ultrasonic energy or the like.

At the next station, a web **76** of the less permeable material **16** is unrolled from a pair of rolls **72, 74** so that the less permeable web **76** may be positioned on the package **10**. In the embodiment of Figures 1-2, the less permeable web **76** is secured to the ledge **22**. In contrast, in the embodiment of Figures 3-4, the less permeable web **76** is secured to the outermost edge **56**. In either case, this securing is performed using conventional techniques, such as using a heat sealing machine **42**. At this point, the transportation gas is sealed inside the package **10**. Finally, the web **76** is cut by conventional cutting equipment **78**. In the embodiment of Figures 1-2, the cutting occurs slightly outward from the edge **28**. In the embodiment of Figures 3-4, the cutting occurs slightly outward from the outer edge **56**. This leaves an overhanging piece **19** or **58** of the less permeable material **16** which may be grasped by the user to remove the membrane **16** when desired.

When the package **10** has been assembled, the package may be shipped to locations for retail sale. At the retail establishment, the package is held until the package is ready to be displayed. At that point, the less permeable membrane **16** is peeled away and discarded. After a short holding period, the package may be displayed for retail sale. The holding period is necessary to allow the package to absorb oxygen through the more permeable membrane **14**. After the meat product has bloomed, it can be displayed for retail sale.

It can be understood that through the provision of the trough **26** or lip **50**, both membranes **14, 16** may be attached to the same tray **12** in a fashion that permits high speed manufacture. While the simplified process depicted in Figure 5 suggests that the material may be packaged in a serial fashion, this approach would likewise apply to conventional packaging equipment.

Advantageously, the more permeable membrane is sufficient to maintain the desired gaseous environment in the package until the less permeable membrane is in place. This is especially true with high speed systems. However, in some circumstances it may be useful to provide a particular gaseous atmosphere between the stations where the more permeable and less permeable membranes are applied.

The same process can be used to make a package wherein both membranes are substantially impermeable.

A packaging machine **120**, as shown in Figure **6**, includes four stations **122**. While the machine is illustrated in a four-station embodiment, it should be understood that one or more of the indicated stations may be unused and that in any particular embodiment it may be possible or desirable to have more or less than four stations. The four stations **122** operate on packages which are moved circularly from one station to the next.

The packages to be produced are held on a platform **124** which in the illustrated embodiment includes slots **126** to receive four package trays. A variety of package types may be utilized including those described herein.

The platforms **124** are carried on mounting arms **128** which in turn connect to rotatable ring **130**. The ring **130** is driven by the mechanism **132** which may be of any conventional type but is illustrated as being a drive chain and motor arrangement.

The entire machine **120** is supported atop a base **134** on feet **136**, as shown in Figure 7. Base **134** also supports a surge tank **138**, which in turn supports a hanger assembly **140**. The surge tank **138** provides a central support for mounting the ring **130** and drive mechanism **132**. The base **134** and hanger assembly **140** may be utilized to support various equipment positioned at the stations **122** for operating on the food trays contained within the platform **124**. For example, as shown in Figure 7, a tray load mechanism **142** is associated with the station **122a** and supported on the base **134**. Similarly, a tooling assembly **144** includes an upper portion **146** mounted on the hanger **140** and a lower portion **148** mounted on the base **134**. The upper portion **146** includes a housing or chamber **147** and the lower portion **148** includes a housing or chamber **149**.

The tray load mechanism **142**, shown in Figure **10**, includes a tray conveyor **150** and a tray loader **152**. The conveyor **150** may be a conventional belt conveyor wherein the trays **155** are motioned onto the tray conveyor **150**. They are aligned by a stop bar **154** powered by a cylinder **156**. At the appropriate interval, the trays **155** may be advanced to a second stop bar **158** so that the position previously occupied by the trays **155** may be filled by additional trays. The stop bar **158** is controlled by a second cylinder **160**. The trays **155** may be pre-loaded with the food product to be packaged.

Below the platform **124a**, there is a cylinder **162** that powers a bed **164** upwardly and downwardly. The bed **164** includes a stop **166** on its inward end. Each bed **164** is designed to receive a tray **155** from the tray conveyor **150** and to lower it into a platform slot **126**. Thus, there would be a plurality of mechanisms **160** and **164**, one for each of the slots **126** in a platform **124a**.

In the illustrated embodiment, the station **122b** is an inactive station which is not used. However, in the other applications, it may be desirable or necessary to perform all or part of the operation which is done at another station at the station **122b**. The station **122b** could be used, for example, to load the food product into the trays **155**.

The station **122c** includes a tooling assembly **144** made up of an upper portion **146** and a lower portion **148**. As shown in Figure **7**, the upper chamber **147** is mounted on a mechanism **168** which allows it to be raised and lowered towards and away from the platform **124**. Likewise, the lower chamber **149** is mounted on a mechanism **170** which raises and lowers the lower portion **148** towards the underside of the platform **124**. If desired, either the upper chamber **147** or lower chamber **149** may be stationary.

The mounting of a platform **124** on the arms **128** is shown in Figures **12** and **13**. As shown in Figure **12**, the platform **124** is mounted on the arms **128** by a plurality of upstanding pins **172**. Each pin **172** includes a tapered upper portion **174** which fits in a mating tapered portion **176** in the underside of the platform **124**. Thus, the platform **124** is removably located on the arms **128** by way of the pins **172**.

The lower chamber **149** includes a pair of upstanding pins **178** with tapered portions **180** which mate in holes **182** in the platform **124**. Thus, when the lower chamber **149** moves upwardly to engage the platform **124**, the tapered portions **180** of the pins **178** mate with the holes **182** in the platform **124**. In this way, the

platform **124** is very precisely centered and positioned within the station **122c**. As shown in Figure **13**, the lower chamber **149** actually lifts the platform **124** off of its pins **172** to achieve the precise alignment. The upper chamber **147** and lower chamber **149** contain seals **184** which provide an air tight seal with the upper and lower surfaces of the platform **124**, again as shown in Figure **13**.

The configuration of the upper and lower portions **146** and **148** of the tooling assembly **144**, shown in Figure **15**, includes a sealer **186**, a cutter **188**, and a web winding system **190**. The web **192** may be unrolled from a roll **194**, processed inside the tooling assembly **144** and transferred to a waste roll **196**. The film **192** may be made of any plastic film used for food packaging including composite films of plastic, aluminum foil, paper, or cardboard.

With the film **192** positioned over the tray **155**, it may be sealed by the sealer **186** which is mounted on a shaft **208**. The seal bar may be telescopically reciprocated up and down at the appropriate times in order to seal the film **192** to the tray **155**. A wide variety of sealers **186** may be utilized, however one conventional sealer uses electrical resistance heaters **200** in order to heat seal the film to the tray **155**. The extent of upward and downward movement of the shaft **208** is controlled by the medial stops **202** under the influence of a conventional fluid energy source. The medial stops **202** are part of a tube **198** which is sealing secured to the shaft **208**.

The sealer **186** may be removed from the mechanism for repair or cleaning when desired simply by unthreading the nut **206**. When this is done, the shaft **208** and sealer **186** may be removed downwardly from the mechanism.

The cutter **188** includes a pair of blades **210** positioned to enter the recess **212** in the platform **124**. These blades cut the film **192** completely around the upper circumference of the tray so that it conforms to the configuration of the tray **155**. Of course, any conventional severing technique may be utilized including

cutting or heat severing. Also, more than one web or film may be severed for attachment to the tray **155**. Like the sealer **186**, the cutter **188** reciprocates upwardly and downwardly around the sealer **186**. It is controlled by stops **214** on arms **216** under the influence of a conventional fluid energy source.

The cutter **188** also includes an internal coolant circulation passage **218**. Connected to a source of external cooling liquid, the passage **218** provides a medium for cooling the cutter **188**. The cutter **188**, in close proximity to the sealer **186**, is subject to possible heat related malfunctions. By cooling the cutter **188**, the precision of the cutting operation may be maintained even in a relatively hot environment.

The lower chamber **149** contains a gas exchange passage **230** in its lower surface, while the upper chamber **147** includes a gas exchange passage **232** in its side wall. The lower portion **148** may include filler **234**. Each platform **124** includes a plurality of gas exchange passages **236**. The gas exchange passage **232** communicates with a vacuum source by way of the quick disconnect device **238**, shown in Figure **14**. That device is secured to the upper chamber **146** by threaded knobs **240**. Similarly, device **242** is connected by threaded knobs **244** to lower chamber **149** to provide gas exchange via opening **230**.

Referring to Figure **14**, it is evident that the connections to the upper and lower portions **146** and **148** are all of the quick disconnect variety so that the machinery associated with any particular station **122** may be readily removed from the remainder of the machine **120**. Moreover, the connections for power and fluid may likewise be of the quick disconnect variety. Thus, the connections such as those shown at **220** may be disconnected by simply pulling them apart or unscrewing them and then the mechanisms **246** holding the upper and lower chambers **147** and **149** may be disconnected in the same fashion so that the upper and lower chambers **147** and **149** may be quickly removed.

The unloading station **122d**, shown in Figure **16**, includes an unloading conveyor **226** and a tray pusher **228**. At the appropriate time, the trays **155** in a platform **124** are pushed upwardly by the cylinder **230** of the pusher **228**. Then the trays are pushed laterally by the slider **232** powered by cylinder **234**. The trays are pushed onto the conveyor **226** as indicated in Figure **13**.

The machine is operated generally as follows. Initially, a plurality of trays **155** are organized on the conveyor **150** of the tray load assembly **142**. As indicated in Figures **8** and **9**, the trays are formed into two rows of four trays through the operation of the stop bars **154** and **158**. Trays are originally allowed to ride up against stop bar **158** so that they slide relative to the rotating conveyor **150**. A second row of trays then back up to the first row of trays.

As shown in Figures **10** and **11**, at the appropriate time, the second stop bar **158** is lowered allowing the first row of trays to pass on to the bed **164**. Each bed **164** is thereafter lowered so that each tray **155** is held in a slot **126** in the platform **124**.

After a passage of time, the platform **124** is rotated 90 degrees to the station **122b**. Thereafter, the stop bar **158** is operated to allow the second row of trays **155** to be loaded into a subsequent platform **124** rotated into station **122a** from station **122d**. From station **122b**, the platform **124** rotates into the station **122c** as shown in Figure **6**.

As shown in Figures **12** and **13**, at the tooling assembly **144**, the platform **124** is lifted from its supports **172** and held between the upper chamber **147** and lower chamber **149** of assembly **144**. Precise alignment is achieved through the operation of the pins **178** which engage mating holes **182** in the platform **124**. The tapered portions on the pins **178** and holes **182** interact to guide the platform into the desired portion within the station. In this way, the trays **155** are precisely positioned with respect to the tooling assembly.

After the platform **124** is in position, a vacuum is drawn in the upper chamber **147** through the gas exchange passage **232**. This is possible since the upper chamber **147** sealingly engages the film **192** through o-ring seals **184**. After the drawing of a vacuum is begun in upper chamber **147**, a vacuum is begun to be drawn in the lower chamber **149** via a vacuum tube **239**. This is possible because the lower chamber **149** sealingly engages the platform **124**, against the upper chamber **147**, through an o-ring seal **184**.

As a result, good fluid communication is achieved with the exterior of the tray **155**, under the film **192**. This is because the vacuum in the upper chamber **147** lifts the film **192**, allowing air to be exhausted from the tray **155** through a series of holes on slots **250** in the bottom of recess **212** of the platform and out the opening **230**. The provision of the filler **234** makes this process proceed more quickly.

After the vacuum is drawn, a desired atmosphere is then pumped into the tray via the openings **257** and **236** from the gas tube **237**. This atmosphere is preferably one which is reduced in oxygen content to extend the life of the packaged food product.

As shown in Figure **15**, the film **192** may be heat sealed to the tray **155** using the sealer **186**. This operation may be a conventional heat sealing operation. The sealer **186** reciprocates downwardly under the control of the stops **202** in response to changing fluid pressure in the chamber **203**.

After the film **192** is sealed to the tray **155**, the film is cut by cutter **188**. The cutter **188** reciprocates downwardly to cut the film **192**, eventually entering the recess **212**. The movement of the cutter **188** is controlled by the fluid pressure in the chamber **217**. In this way the desired atmosphere may be sealed into the package. Of course, other gas exchange techniques may be utilized as well.

Advantageously, the atmosphere inside the assembly **144** is reduced in oxygen content so that the food product will have a longer useful life.

The operation of the cutter **188** may be adversely affected by the ambient heat within the assembly **144** which is greatly augmented by the heat created by the heat sealing operation. This heat may distort the cutting blades and cause inaccuracies therein. For this reason, a source of cooling fluid, for example water, may be circulated through the passage **218** so as to cool the cutter **188**.

After this operation is complete, the upper chamber **147** and lower portion **149** may be moved apart and the rolls **196** and **194** advanced so as to bring a new section of film into position between the chambers **147** and **149**. Trays **155** are then advanced to the next station **126d**.

As shown in Figure **16**, in station **122d** the trays **155** are positioned over the tray pushers **228** and cylinders **230**. At the appropriate time, one or more trays **155** are pushed upwardly through the action of the cylinders **230** and pushers **228** as shown in Figure **17**. Thereafter, the trays may be pushed laterally by the slider **232** and its cylinder **234** as shown in Figure **18**. Then the trays may be taken away from the rotary conveyor by the unloading conveyor **226**.

The entire operation is facilitated by the rotary arrangement of the stations **122**. The operation of the conveyor is continuous since it is laid out in the rotary arrangement. In this way, problems arising from the need to return the platforms **124** to the initial position at the end of a linear conveyor are eliminated.

Moreover, with the rotary arrangement the central area may be occupied by the conveniently located surge tank **138**. This tank supplies a source of fluid pressure for the various operations in the surrounding rotary conveying apparatus. The tank **138** is normally closed by caps **254** on both ends. As shown in Figure **19**, a drain **252** is provided at the bottom of the surge tank **138** for releasing a

sanitizing solution. The drain may be closed by a removable cover **256**. The interior of the tank **138** may be washed with the bacteriostatic solution to minimize bacteria transfer to the packaging. The tank **138** also provides the support for the drive mechanism **132** and rotatable ring **130**.

In addition, because of the rotary arrangement of the conveyor, any particular station may be easily accessed for removal from the rest of the machine. Any particular station may be easily replaced with a more appropriate station for any particular operation. Also, a malfunctioning apparatus may be replaced with a working apparatus. Because of the rotary arrangement, access to the individual stations for repair is facilitated.

Repair and replacement is also facilitated by making the various connections to the stations for electrical and fluid power of the quick disconnect variety. Moreover, by making the means of attachment of the particular apparatus to each station of a quick disconnect variety it is possible to change stations quickly to convert the machine for other uses or to replace a broken piece of equipment.

A packaging process for packaging a large meat product "**A**" is shown in Figure **20** and includes the steps **a**, **b**, and **c**. In step **a**, the food product "**A**" is shown contained within a dish-shaped plastic package portion **310** which is supported by a peripheral flange **312** on a member **314**.

The package portion **310** may be formed of a variety of conventional materials including any known plastic packaging material. In many instances, it may be desirable to form the lower package portion **310** of molded foamed plastic so that the package portion will be relatively rigid.

Referring to Figure **20**, step **b**, an upper package portion **318** is shown in spaced relation to the lower package portion **310** over the food product "**A**". The

package portion **318** is domed and includes a peripheral flange **320**. Like the package portion **310**, the upper package portion **318** may be formed of a variety of conventional plastic materials. However, in many instances, it may be desirable to form the upper package portion **318** out of relatively rigid, molded transparent plastic material. This allows the food product "**A**" to be viewed within the food package. Advantageously, both the portions **310** and **318** are preformed of relatively rigid, molded plastic material.

As shown in Figure **20**, step **c**, the upper and lower package portions **318** and **310** may be joined along their peripheral flanges **320** and **312** by an apparatus **322** which presses the flanges **320** of the portion **318** downwardly onto the flanges **312** of the package portion **310**. If desired, the apparatus **322** may be a heat seal machine which causes heat sealing of the juxtaposed flange portions thereby connecting the materials.

The advantage of holding the upper domed portions **318** in spaced juxtaposition with the lower portion **310** is that the gaseous environment within the package may be transformed prior to the sealing step **c** shown in Figure **20**. For example, the air inside the package may be exhausted, and a desired gas may be supplied in its place. The desired gas may be one which is relatively low in oxygen content so that the shelf life of the food product may be extended. For example, the gas may be relatively higher in either carbon dioxide and/or nitrogen than normal atmospheric air in order to prevent or diminish the oxidation processes that shorten the life of the meat product "**A**".

As shown in Figure **21**, the lower package portion **310** may be maintained in a desired arrangement by a set of two pairs of opposed guides **324**. Each of the guides **324** is arranged in a substantially tangential arrangement to the curved sides of the lower package portion **310** so as to abut with the sealing region **326**. The sealing region **326** provides the point of attachment to the upper package portion **318**. It can also be seen in Figure **21** that the lower package portion **310** may

include an outwardly extending flange portion **328** on either of two opposed ends of the package **310**. While the package **310** shown in Figure **21** has an oblong configuration, the cross-sectional configuration of the package may assume one of a variety of different shapes.

Figure **22** shows the positioning of the upper package portion **318** over the lower package portion **310**. The upper package portion **318** includes a pair of opposed bluntly pointed end flanges **334** which interact with and are constrained between each set of guides **324**. The outwardly extending flange portions **334** extend over the tubes **330** such that the tubes **330** do not generally guide the positioning of the upper package portion **318** in the horizontal plane. This accomplished substantially by the guides **324**. In the regions **336**, the flanges **334** extend past the edges **332** of the flanges **328** so that there is a region of overhang of the flange **334** over the lower package portion **310**.

Figure **23** shows a packaging machine for achieving the package operation shown in Figure **20**. In order to illustrate that a variety of package shapes may be utilized, the package **338** shown in Figure **23** is of a slightly different shape than the package shown in Figure **20**. In particular, the lower package portion **310** is deeper than the package portion **310** shown in Figure **20**, and the abruptness of both the lower and the upper package portions **318** and **310** is greater in the embodiment shown in Figure **23**.

The lower package portion **310** rests in a conforming tray **340** which conforms to its outside configuration and supports the flange **312**. The upper package portion **318** has its flange portion **336** resting atop the filling tube **330**.

The filling tube **330** is reciprocal up and down within a slot **342**. However, the extent of its upward extension is controlled by the overhanging edge **344** of the adjacent guide **324**. Each tube **330** includes an outer cylinder **330a** and an inner cylinder **330b**.

The outer cylinder **330a** includes a set of "O" rings **346** which prevent leakage around the tube **330**. A pin **348** is provided to control the extent of downward movement of the tube **330** and to prevent its rotation about its lengthwise axis. Within the center of the tube **330** is a bore **350** which is capable of conveying gas to or from the interior of the package to or from the passageway **352**. Thus, gas may pass via the passageway **352** to or from the interior of the package shown in the configuration of Figure **23**.

A pressurized gas supply passageway **372** is connected to a source (not shown) of pressurized gas. When desired, pressurized gas may be communicated via the passageway **372** to act on the lower end of the outer cylinder **330a**. This causes the tube **330** to move to its upper position shown in Figure **23**.

Juxtaposed over the upper package portion **318** is a pusher bar **354** and a sealing bar **356**. The sealing bar **356** may be a conventional heat sealing bar which heat seals the flanges of the upper package portion **318** to those of the lower package portion **310**.

The vacuum chamber cover **390** seals to the lower chamber **392** through inner and outer peripheral seals **394** and **396** and the abutment of gasket **398** on the lower chamber **392**. A valved passage **400** is provided for pulling a vacuum inside the chamber defined by the cover **390**.

Figure **25** shows an alternate embodiment in which a gas exchange system is provided on the upper package portion **318**. The gas exchange portion **358** is constructed generally as described previously. The portion **358** includes one or more holes **360** formed in the package portion **318**. These holes are covered by a first circular plastic film layer **362** which may be permeable to atmospheric air. The layer **362** is sealed to the package portion **318** at **364**. Attached over the portion **362** is an upper fluid impermeable plastic film **366** which is sealed at **368**

to the upper package portion **318**. When desired, the layer **366** may be peeled away to allow gas exchange through the lower layer **362** via the holes **360**.

The method and apparatus of the present invention may be implemented in the following fashion. The lower package portion **310**, loaded into the conforming tray **340**, is supported by its flanges **312**. Then a meat product "**A**", if not already loaded, may be loaded inside the package portion **310**. Next, the relatively rigid top or upper portion **318** is aligned over the lower package portion **310** but resting on the top of the filling tubes **330** as shown in Figure **23**.

Initially, the air within the package is exhausted through both the passage **400** and the bore **350** to the passageway **352**. Then, with the passage **400** closed, a desired gaseous environment is passed through the passageway **352** and the bore **350** into the package. This gaseous environment may be one which is relatively poor in its concentration of oxygen and relatively higher (with respect to normal ambient atmosphere) with respect to its carbon dioxide and/or nitrogen content. The result of such an environment is to extend the shelf life of a meat product. This is because the presence of oxygen causes the meat product to age and discolor.

After the desired environment has been established, the gas filling tubes **330** are pushed downwardly by the pusher bar **354** into their passageways **342** until the pins **348** engage the top of the slots **380**. In this position, shown in Figure **24**, the upper package portion **318** is in abutment with the lower package portion **310**. At this point, the sealing regions **326** are likewise in abutment. The package is thereafter sealed along the regions **326** of the upper and lower package portions **310** and **318** to provide an air tight seal between the two package portions. This is accomplished through the sealing bar **356** which may, in one advantageous embodiment, cause heat sealing of the components together. The sealing bar **356** reciprocates with the pusher bar **354**. However, the pusher bar

354 pushes the tubes 330 below the flanges to insure that, regardless of the package thickness, the tubes 330 do not interfere with the sealing process.

The completed package 338 may be removed by raising the cover 390 with the sealing bar 356 and pusher bar 354. The package 338 may be removed from the conforming carrier 340. This may be accomplished in batch or continuous fashion as desired.

The cycle may be repeated after the gas tubes 330 are reciprocated to their upper position. This is achieved by supplying air pressure to the upper cylinders 330a. The air pressure is released through a relief valve (not shown) when the tubes 330 are pushed downwardly by the pusher bar 354.

The positioning of the upper and lower packaging portions 310 and 318 with respect to one another is assured by the provision of the guides 324 and the filling tubes 330 which interact with the special package shape to ensure exact juxtaposed position of the parts relative to one another. Moreover, the flange portions 336 of the upper package portion 318 maintain the separation of the package when they abut with the filling tubes 330.

Firstly, the lower package portion 310 is inserted into the conforming carrier 340, guided by tubes 330 and guides 324. Then, the upper package portion 318 is located on the tubes 330, positioned by the guides 324. Thereafter, the cover 390 is closed and the process may be repeated.

In many applications, particularly those involving red meat, it may be desirable to withdraw the low oxygen atmosphere from the container at the point of sale. Otherwise, the package with its low oxygen environment will cause the meat to have a purplish color. Thus, in the supermarket, the upper fluid impermeable film 366 may be peeled back. This allows ambient atmosphere to enter the package so that the meat will take on a reddish color.

The provision of the overhang **336** of the upper package portion **318** over the lower package portion **310** facilitates the removal of the domed upper package portion **318** in use. Moreover, the concealed location of the overhang **336** diminishes the possibility of accidental opening.

Thus, it is apparent that there has been provided, in accordance with the invention, a package, a method, and a packaging apparatus that satisfies the aims, objects, and advantages set forth above. While the invention has been described in conjunction with specific embodiments thereof, it is evident that many alternatives, modifications, and variations will be apparent to those skilled in the art in light of the foregoing description. Accordingly, it is intended to embrace all such embodiments, alternatives, modifications, and variations that fall within the spirit and broad scope of the appended claims.

THE CLAIMS DEFINING THE INVENTION ARE AS FOLLOWS:

1. A package comprising:

a tray;

a pliant first membrane sealed to said tray; and

a pliant second membrane sealed to said tray over said first membrane, said membranes being secured to separate locations on said tray such that said membranes are substantially coplanar with one another, said second membrane being removable from the tray independently of said first membrane, and said first and second membranes being in substantially continuous contact with one another wherein the second membrane is substantially impermeable.

2. A package as claimed in claim 1, wherein said tray includes a peripheral flange including a ledge and a recessed lip surrounding the ledge to secure the first and second membranes, respectively.

3. A package as claimed in claim 1, wherein said tray includes a pair of substantially coplanar sealing ledges for securing said first and second membranes.

4. A package as claimed in any one of claims 1 to 3, wherein the second membrane is less permeable than the first membrane to gases.

5. A package as claimed in any one of claims 1 to 3, wherein said first and second membranes comprise a substantially impermeable material.

6. A package as claimed in any one of claims 1 to 5, wherein the first and second membranes comprise a resilient material.

7. A package as claimed in claim 3, wherein the

AUSTRALIAN PATENT OFFICE

tray comprises a foam, said ledges being pressed to a substantially uniform thickness.

8. A package as claimed in any one of claims 1 to 7, wherein the first and second membranes are only connected by way of said tray.

9. A package as claimed in any one of claims 1 to 8, including a pair of sealing surfaces for receiving said first and second membranes, there being provided a recess between said surfaces designed to facilitate the severing of the first membrane from a web in place on the tray during manufacture of the package.

10. A package as claimed in any one of claims 1 to 9, wherein said second membrane is peelable from said tray.

11. A method for packaging a food product comprising the steps of:

filling a tray with a food product;

covering said tray with a pliant first membrane by severing from a web of material said first membrane in place on said tray and sealing said membrane to said tray at a first location; and

covering said tray and said pliant first membrane with a pliant second membrane by severing said second membrane over said tray and sealing said second membrane to said tray at a second location outwardly of said first location.

12. A method as claimed in claim 11 wherein said first membrane is severed in place on said tray over a depression in said tray.

13. A method as claimed in either claims 11 or 12 wherein said first membrane is sealed to said tray and then severed from said tray.

AUSTRALIAN PATENT OFFICE

14. A package substantially as hereinbefore described with reference to figures 1, 2 and 5 or to figures 3 and 4 or to figures 20a, 20b, 20c and 21 to 25.

15. A method for packaging a food product substantially as hereinbefore described with reference to figures 1, 2 and 5 or to figures 3 and 4 or to figures 20a, 20b, 20c and 21 to 25.

Dated this 1st day of October 1997
WORLD CLASS PACKAGING SYSTEMS, INC.
By their Patent Attorneys
GRIFFITH HACK
Fellows Institute of Patent Attorneys
of Australia

AUSTRALIAN PATENT OFFICE 3

FIGURE 1

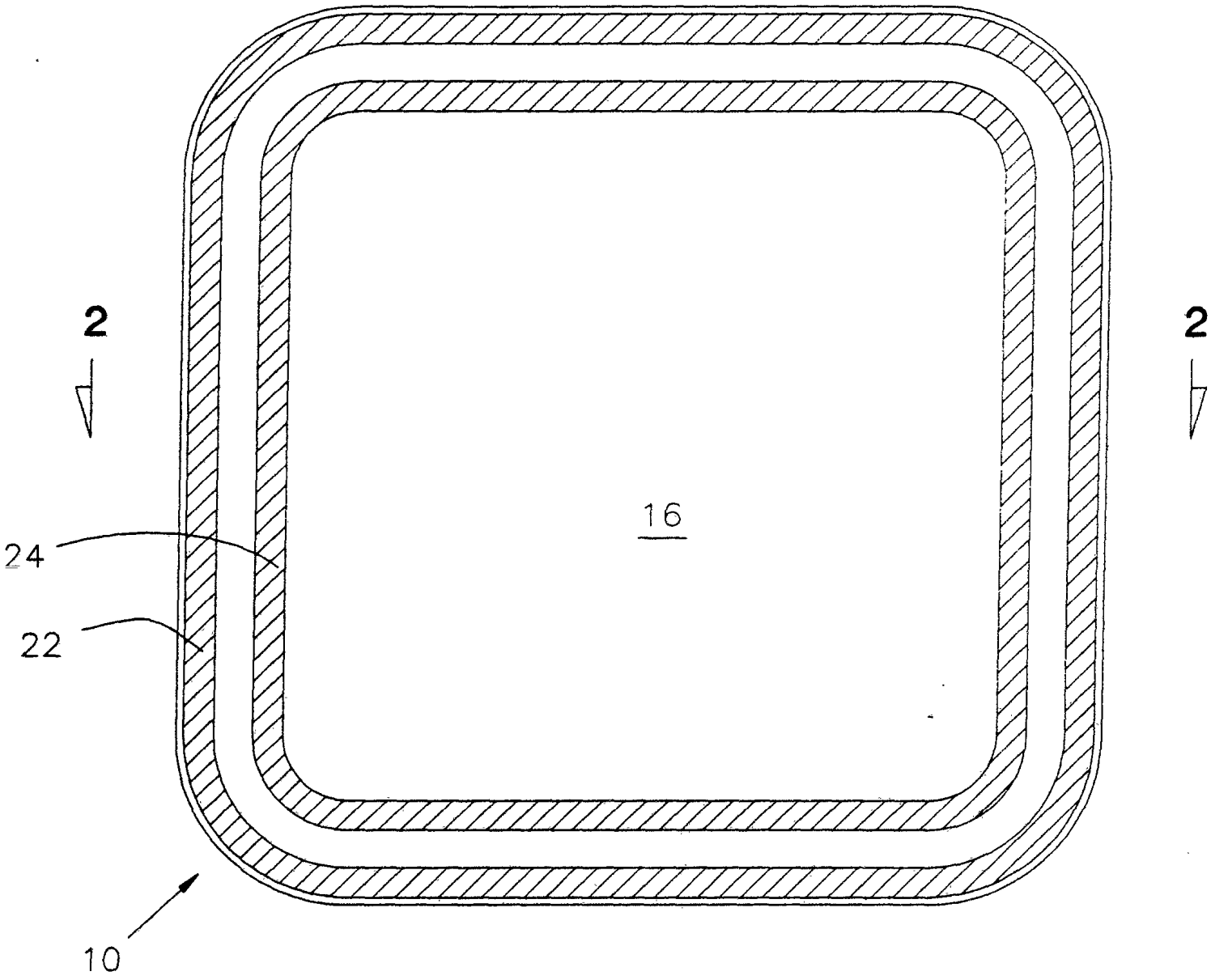

FIGURE 2

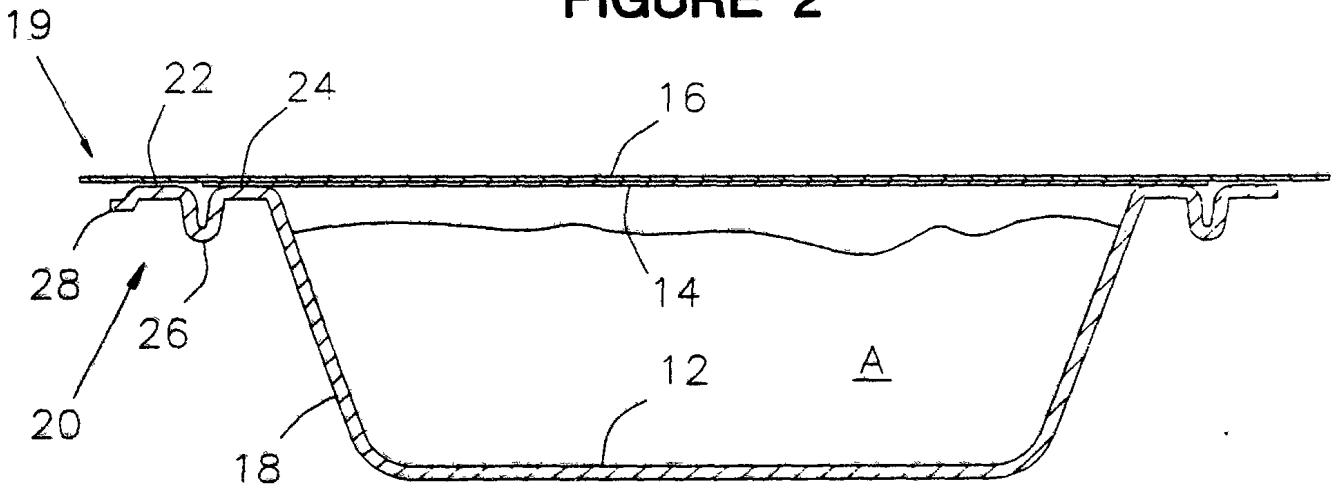

FIGURE 3

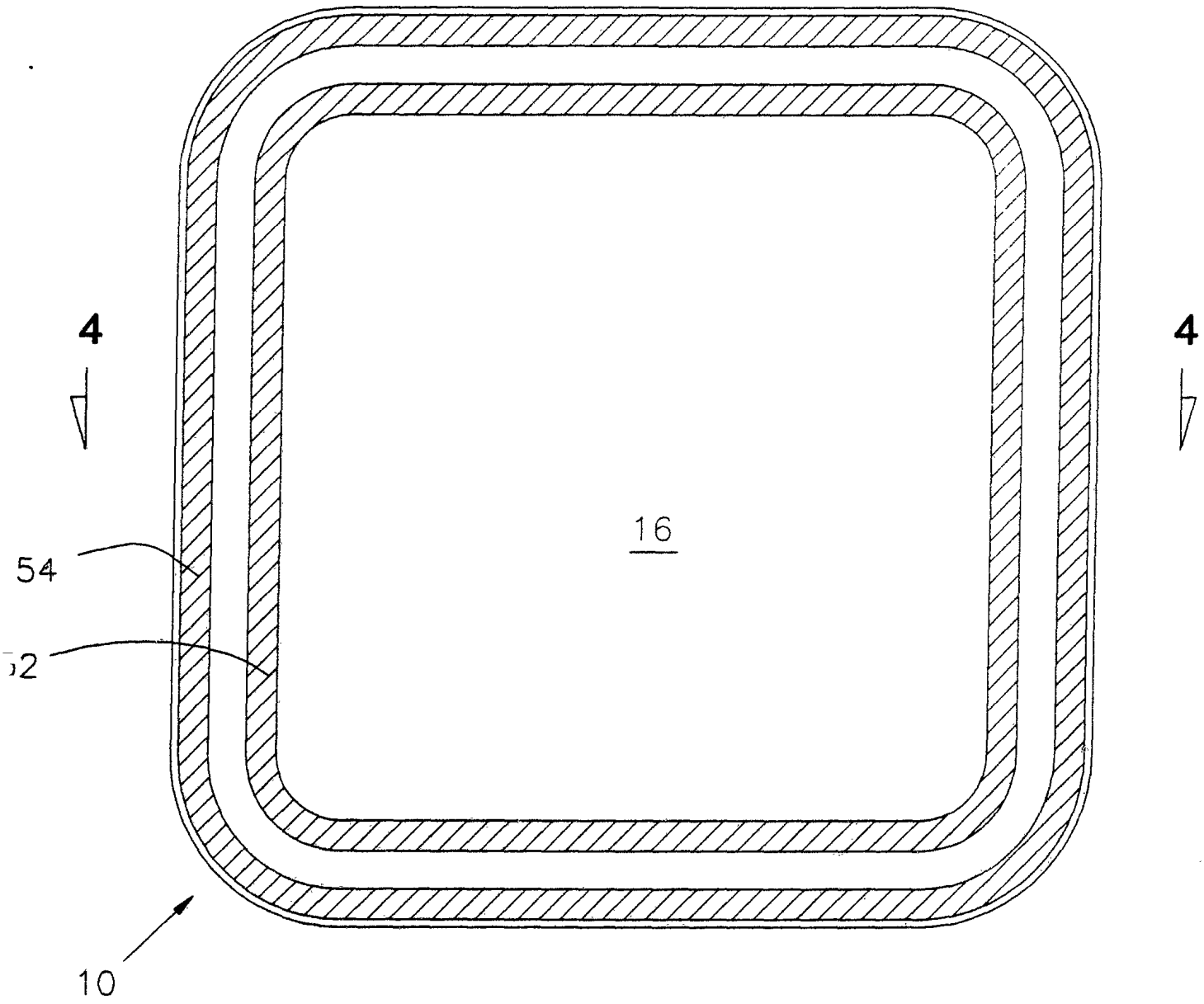

FIGURE 4

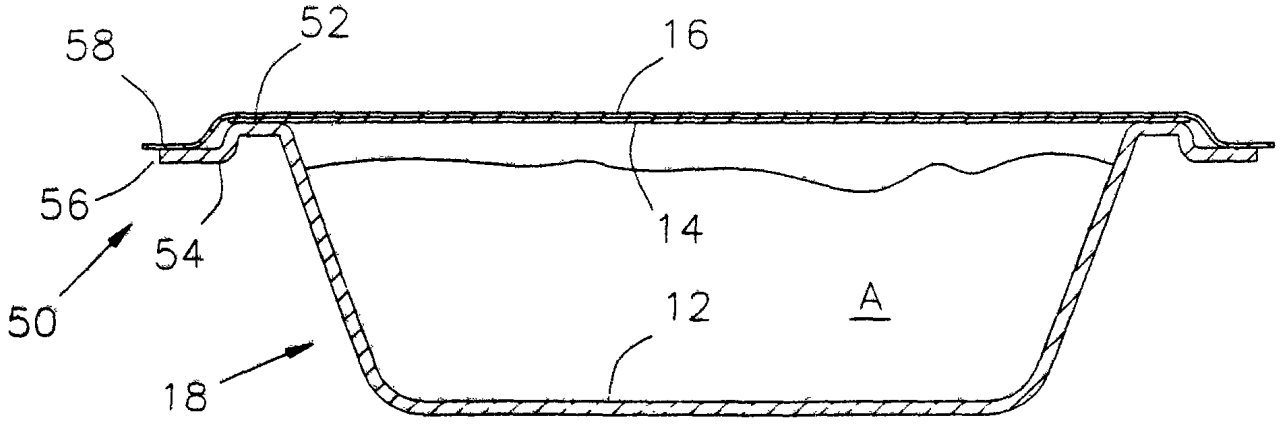

FIGURE 5

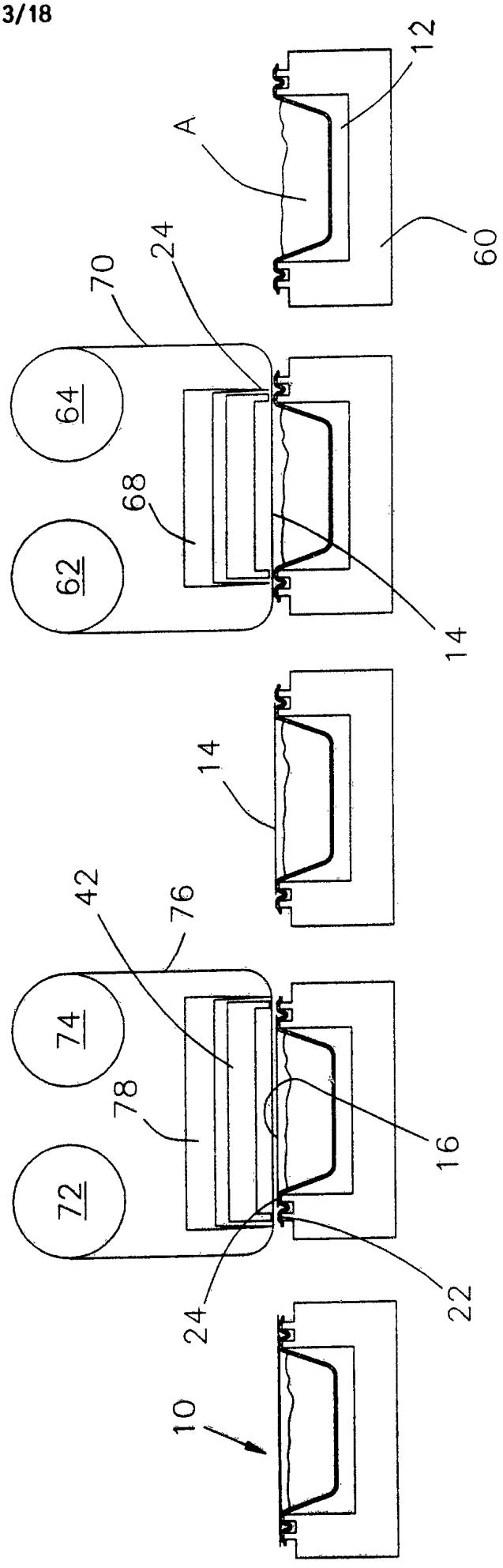

FIG 6

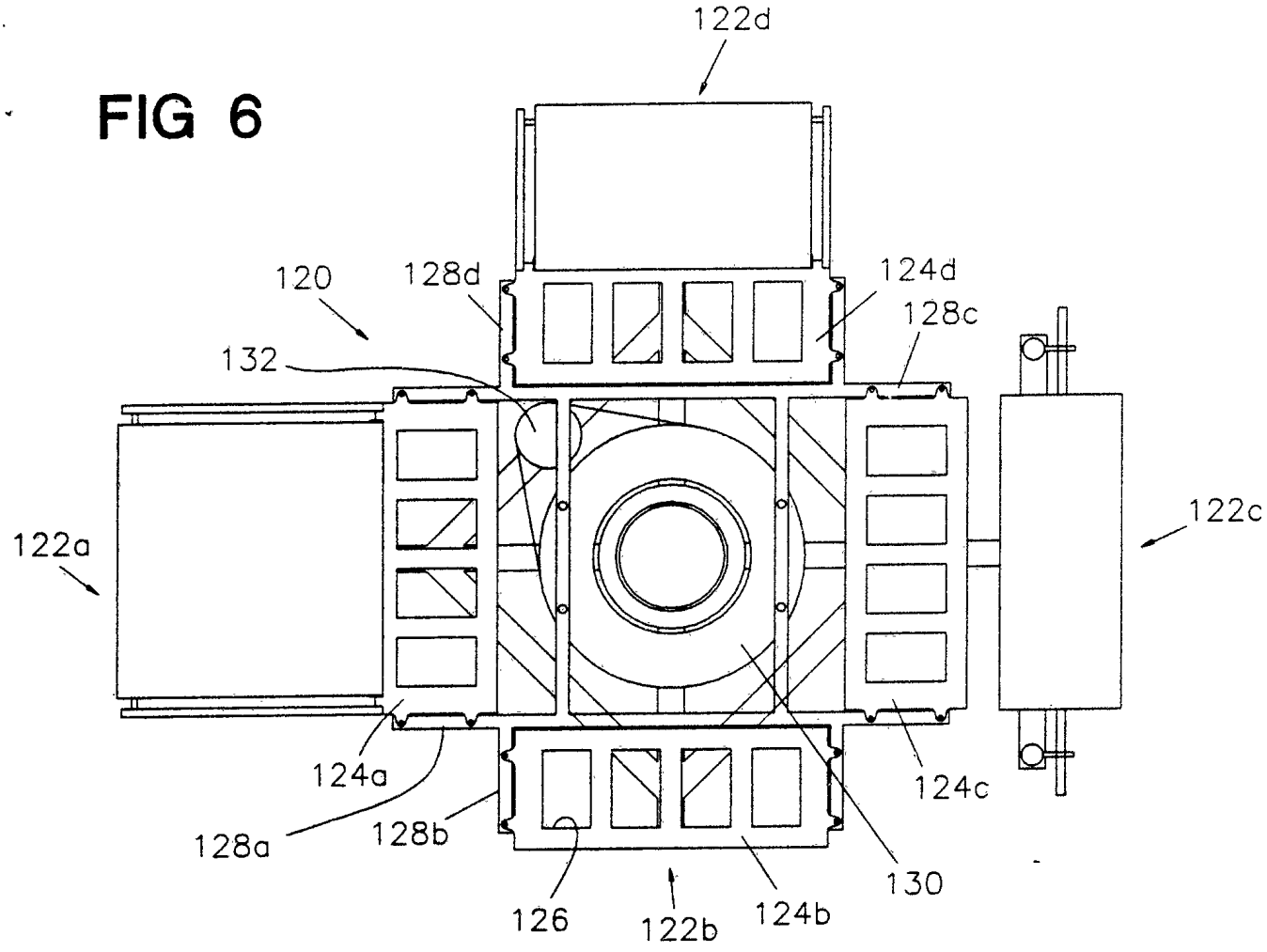
122d
120
128d
124d
128c
132
122a
122c
124a
124c
128a
128b
130
126
122b
124b

FIG 7

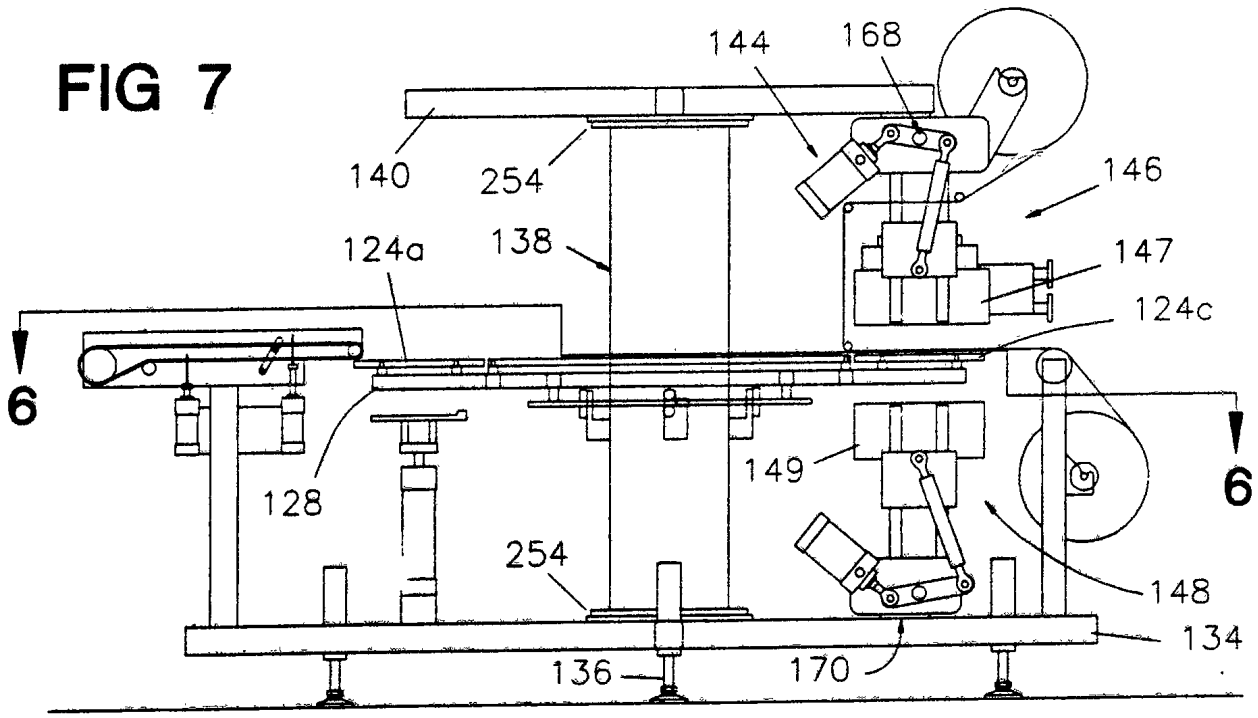
144
168
140
254
146
124a
138
147
124c
6
6
128
149
254
148
134
136
170

FIG 8

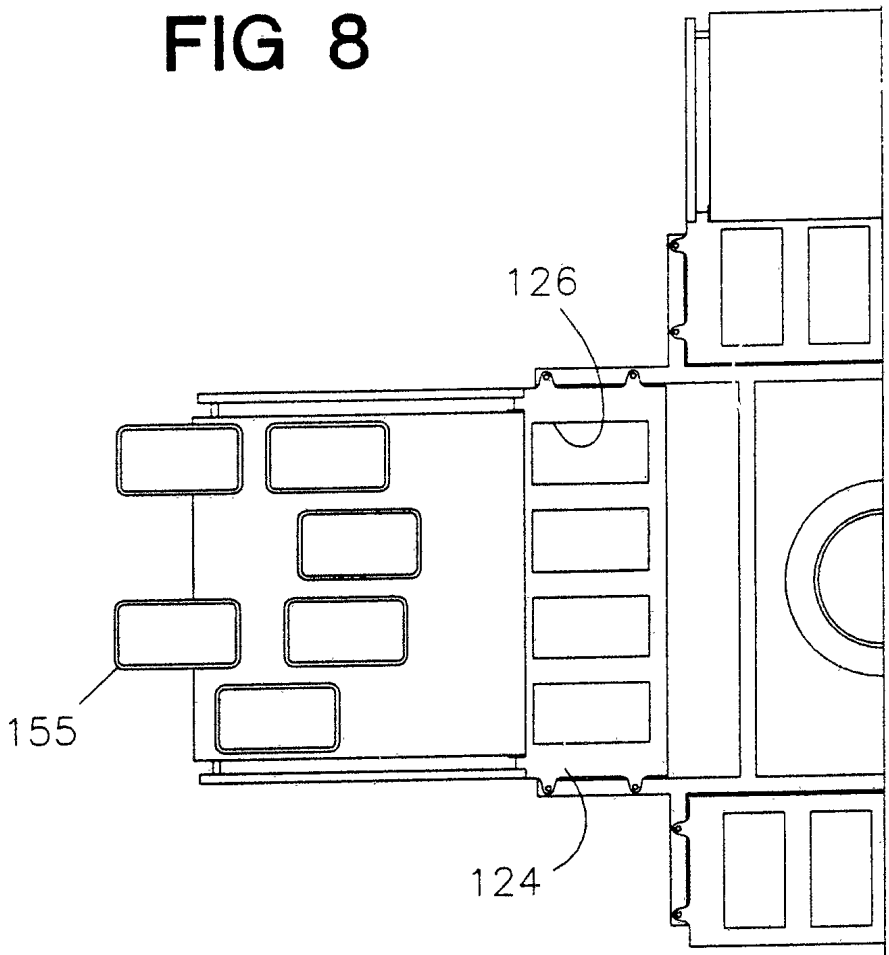

FIG 9

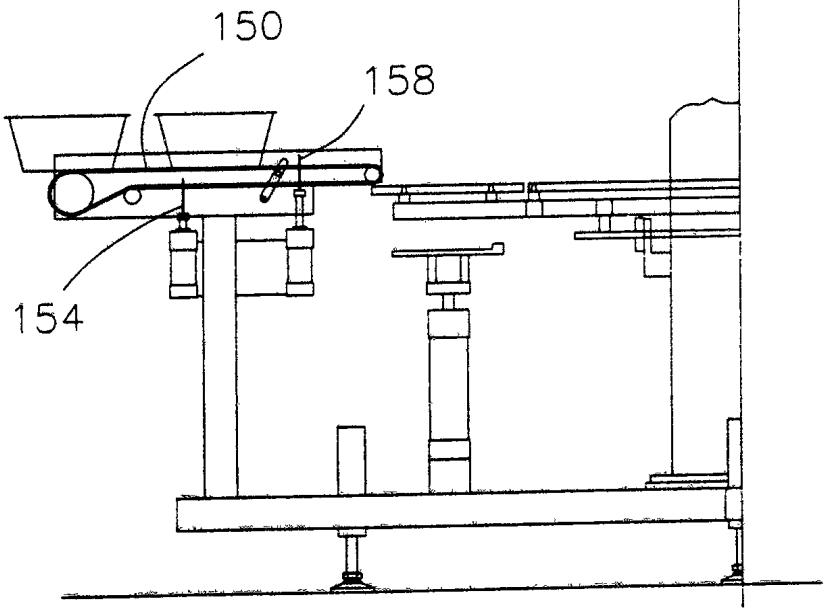

FIG 10

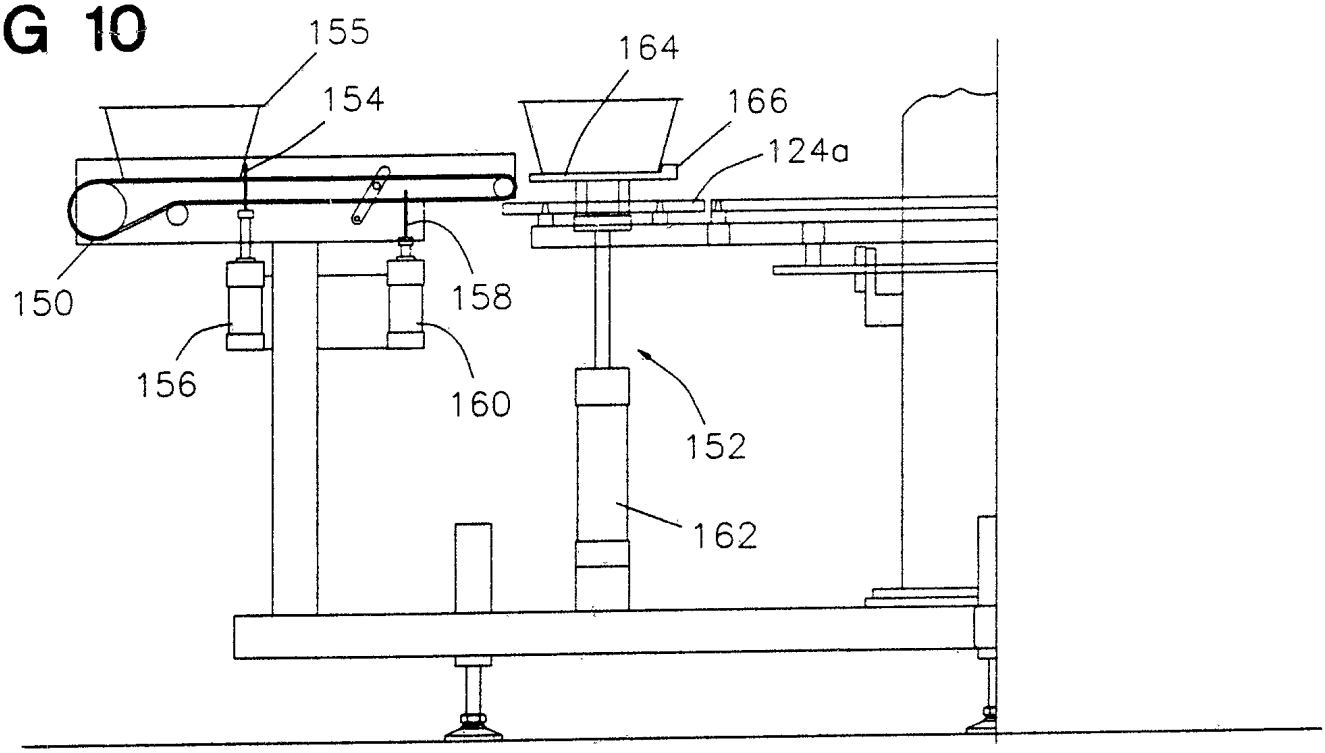

FIG 11

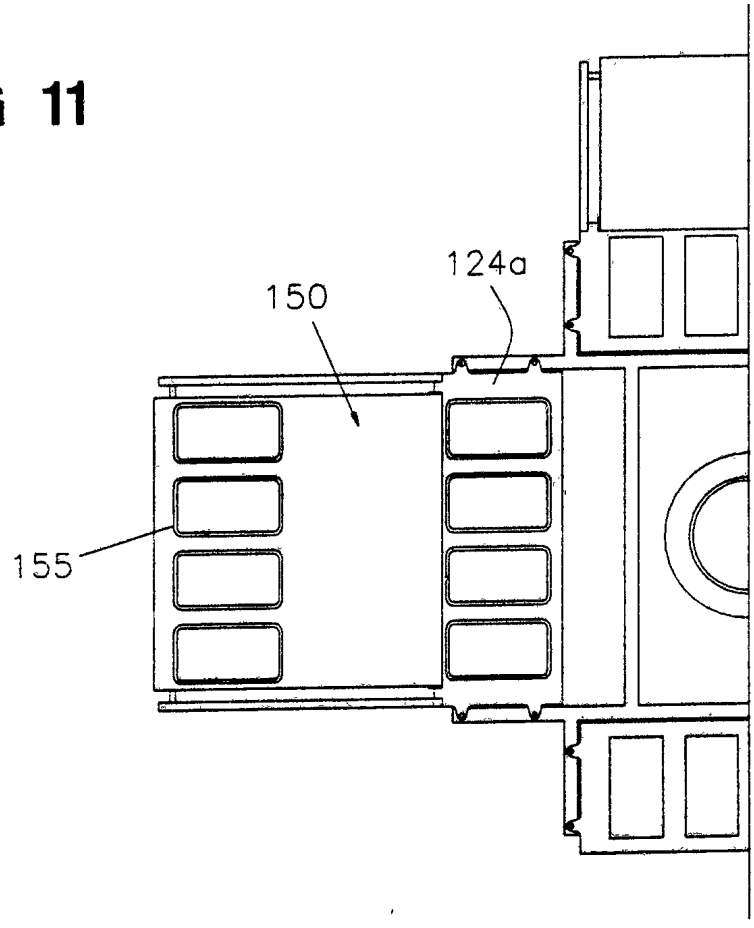

FIG 12

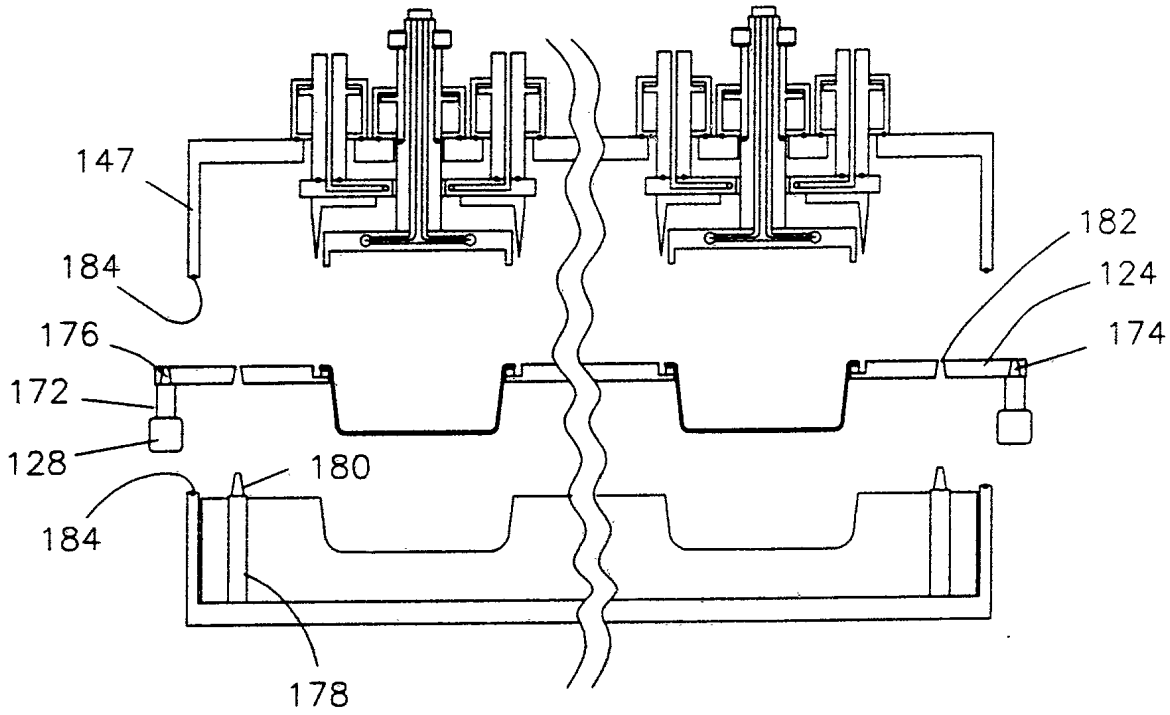
147
184
176
172
128
184
180
178
182
124
174

FIG 13

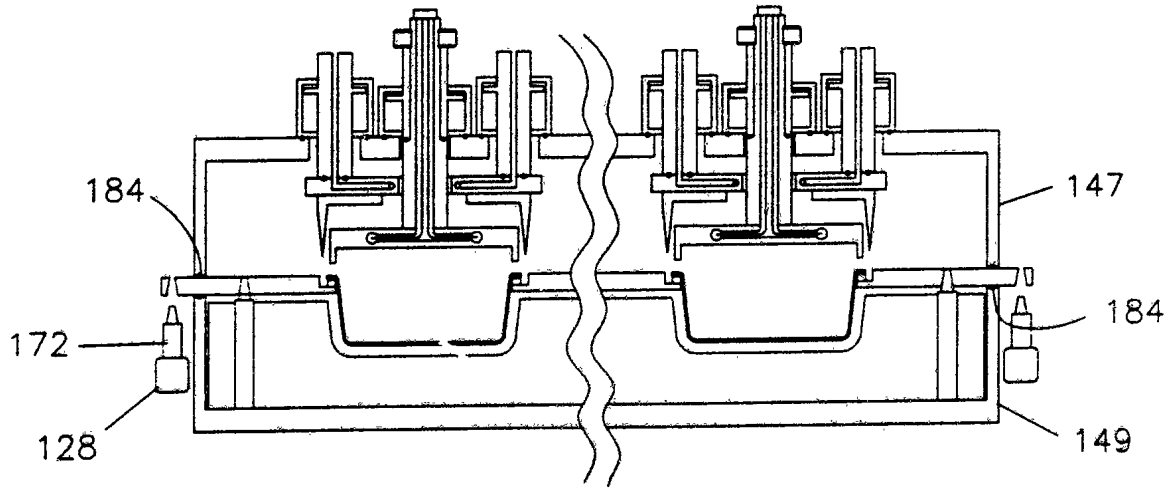
184
172
128
147
184
149

FIG 14

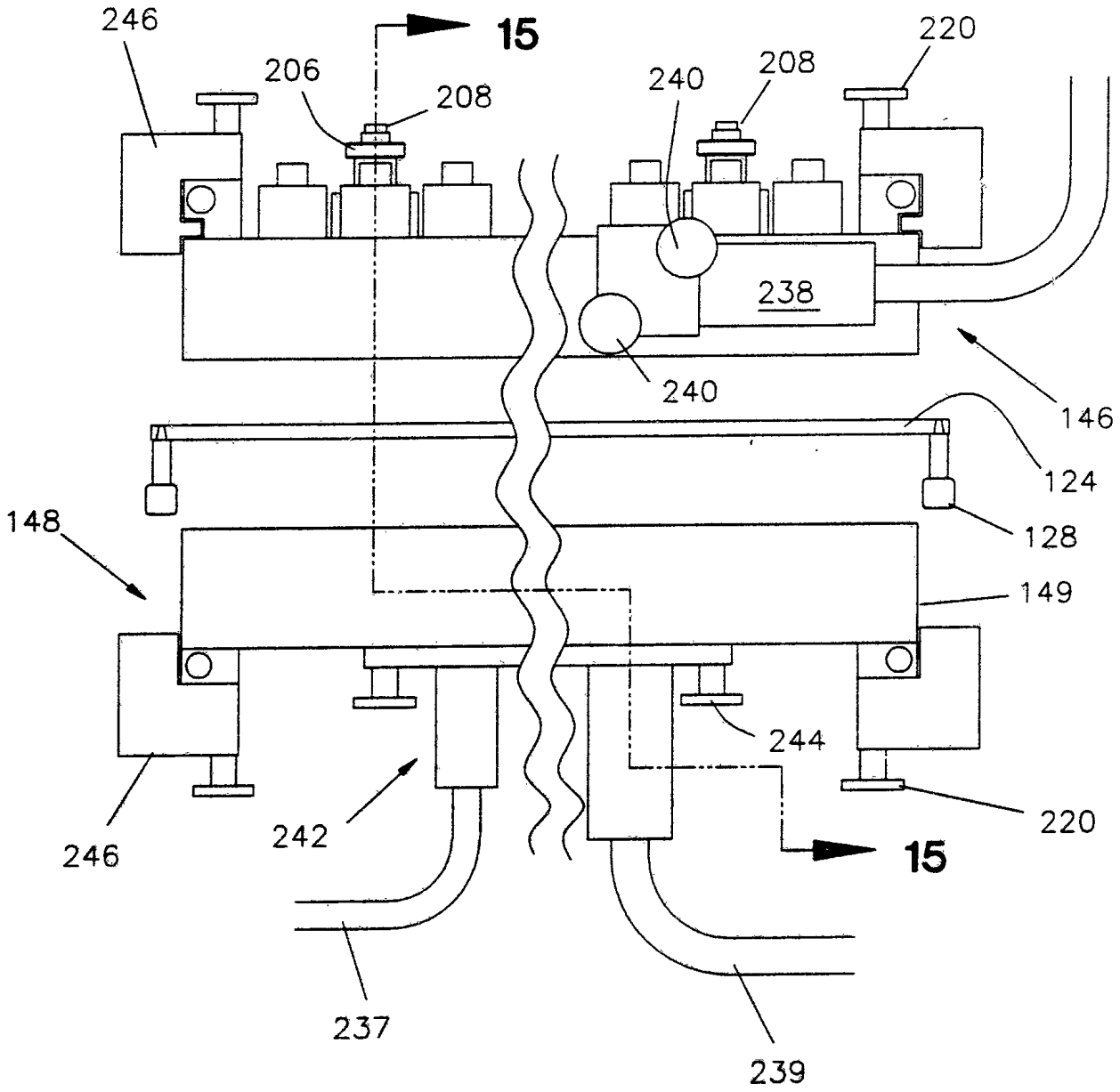
246
206
208
15
240
208
220
238
240
146
124
148
128
149
244
246
242
220
15
237
239

FIG 15

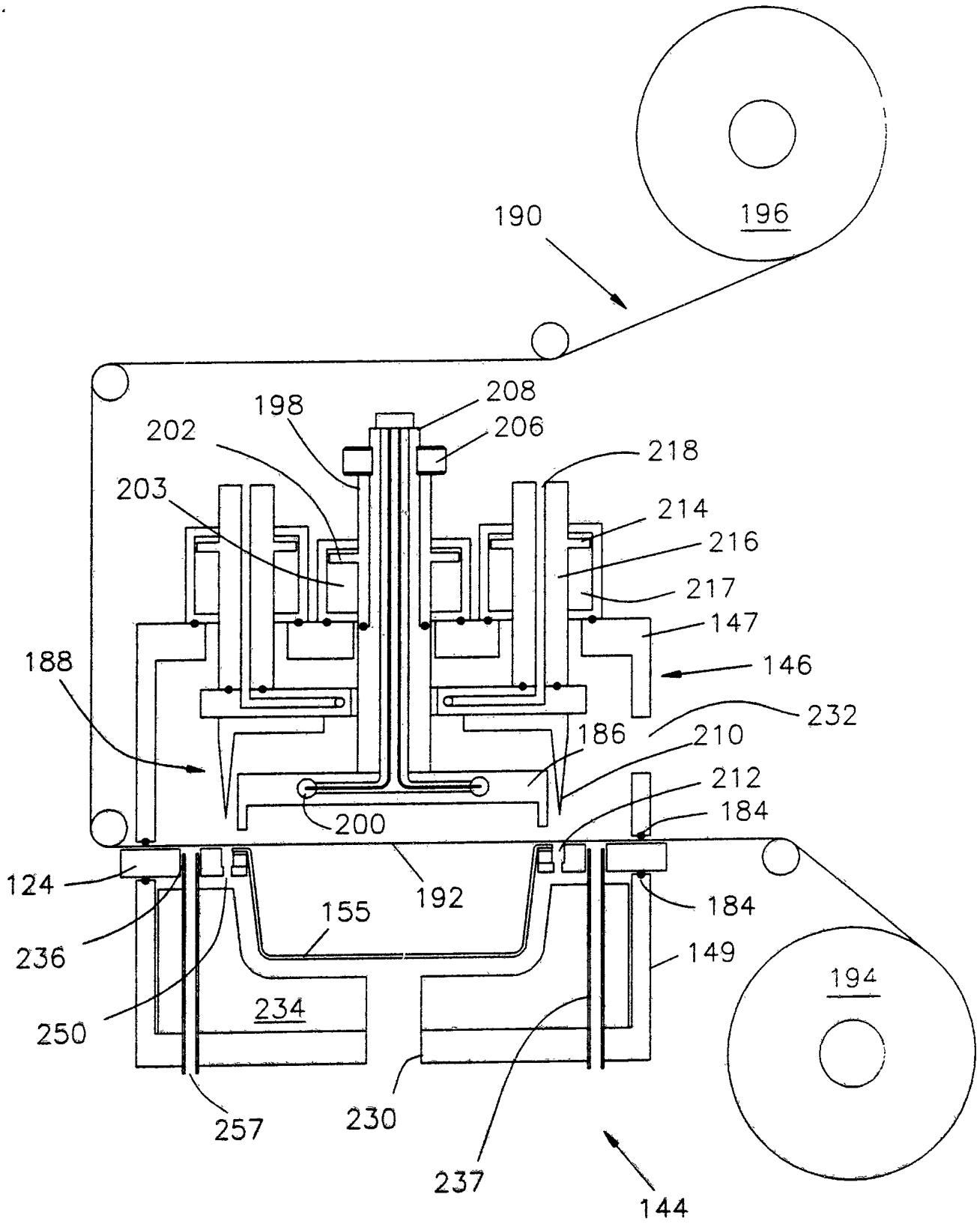
190
196
198
208
206
202
218
203
214
216
217
147
146
188
232
186
210
212
184
200
192
124
155
184
236
149
194
234
250
257
230
237
144

FIG 16

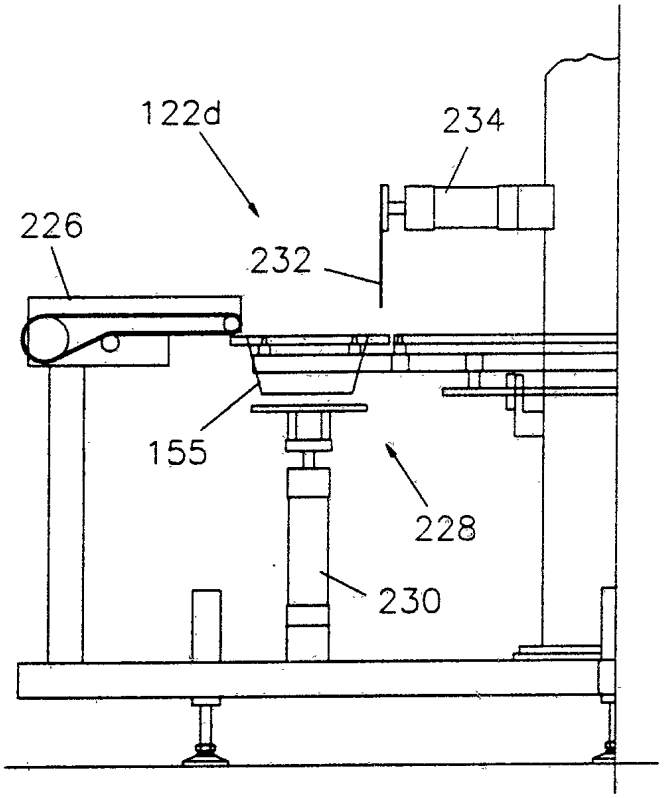

FIG 17

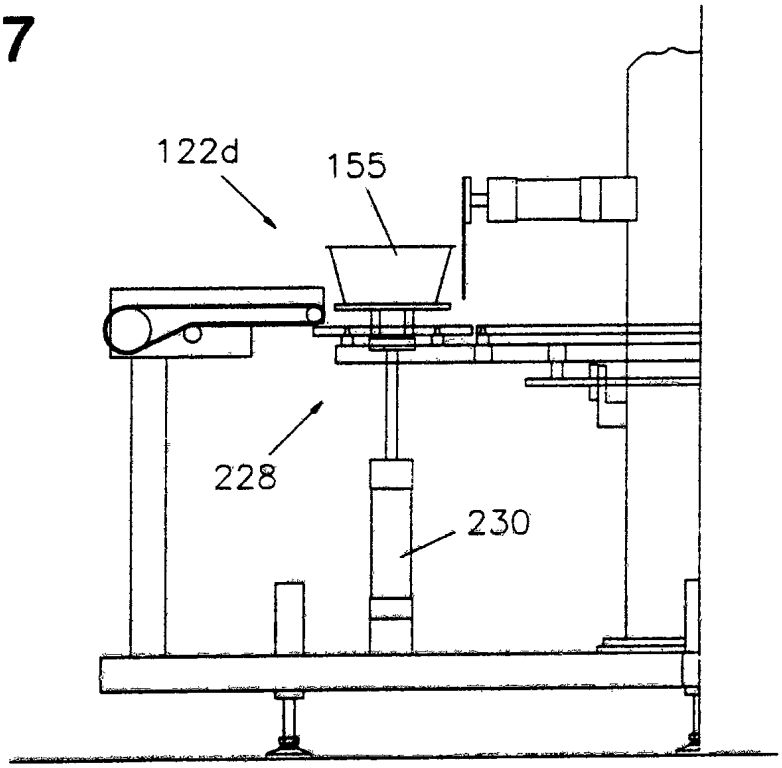

FIG 18

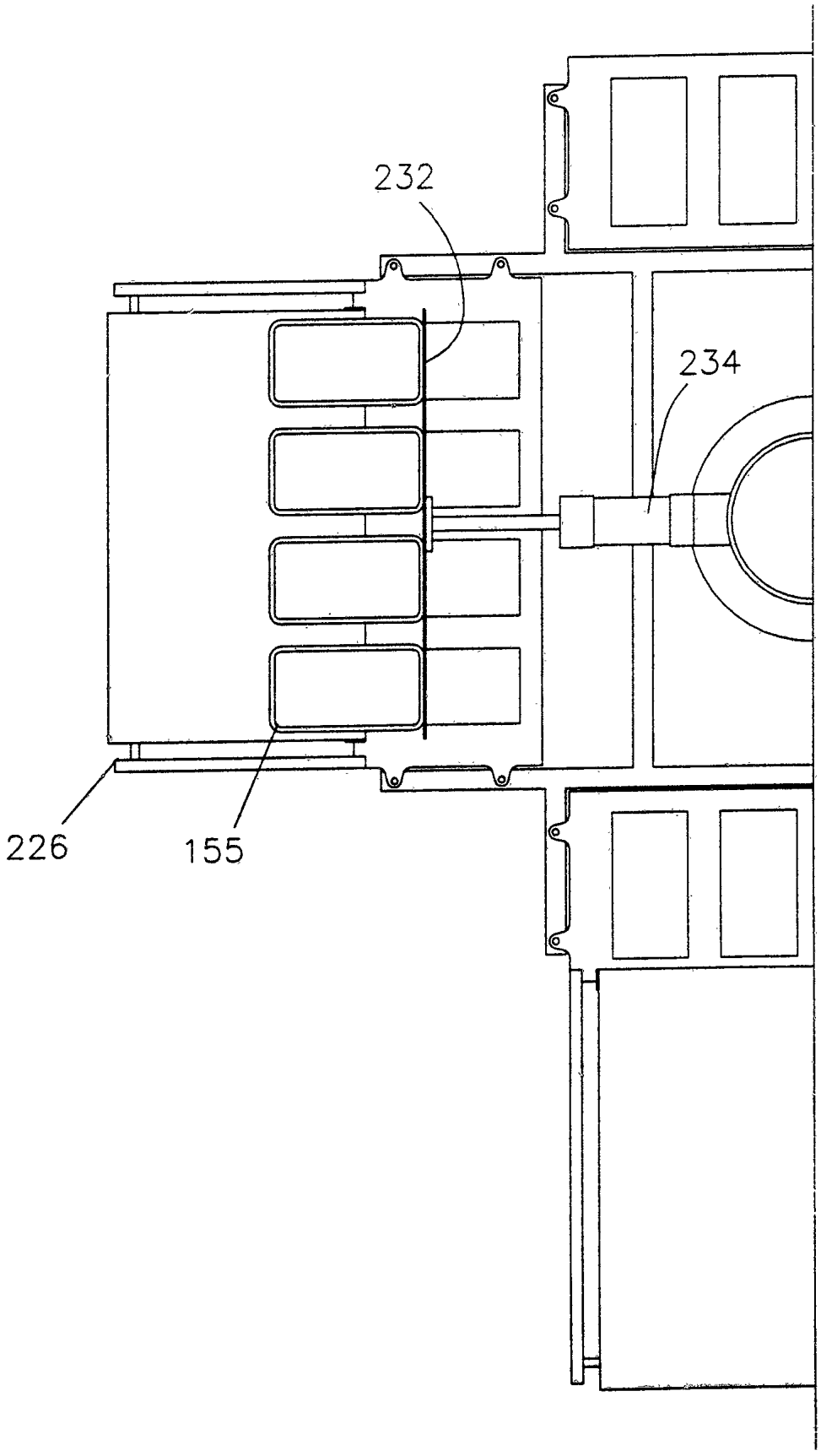

FIG 19

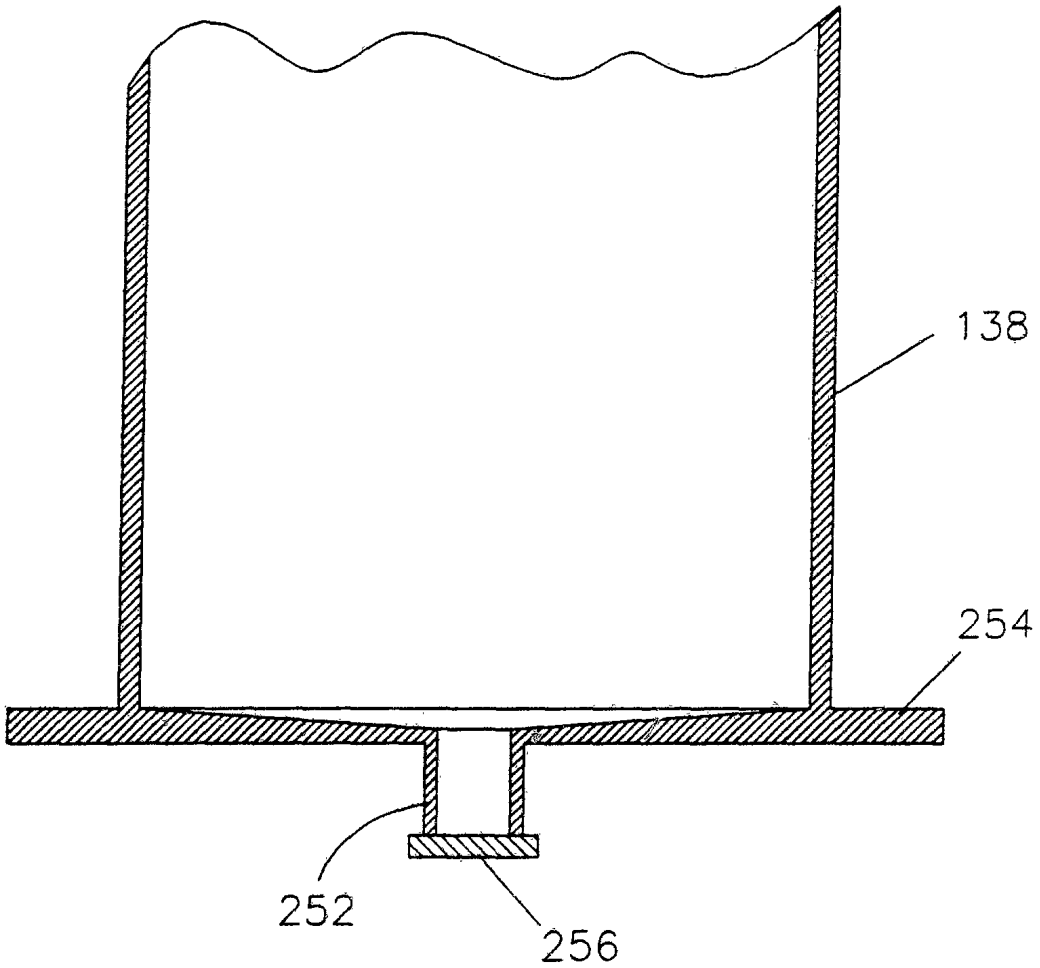

FIG 20

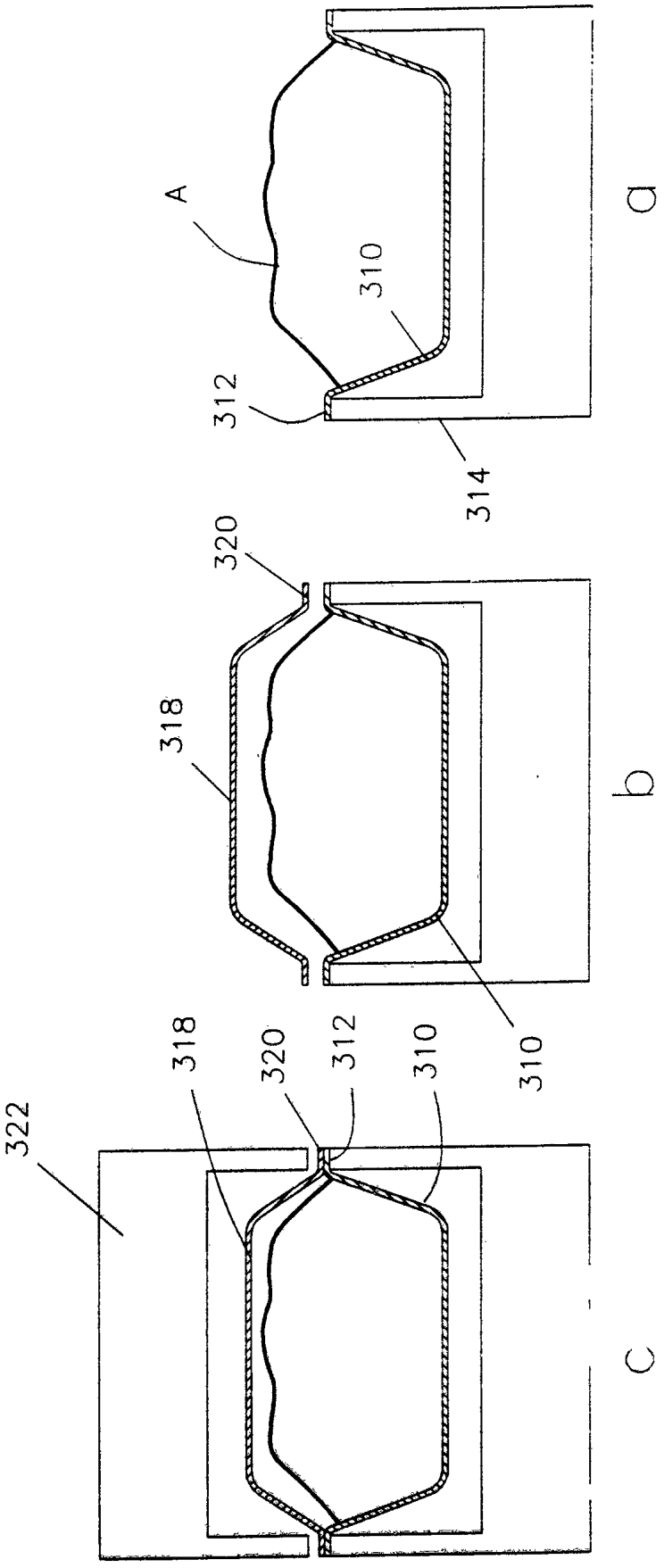

FIG 21

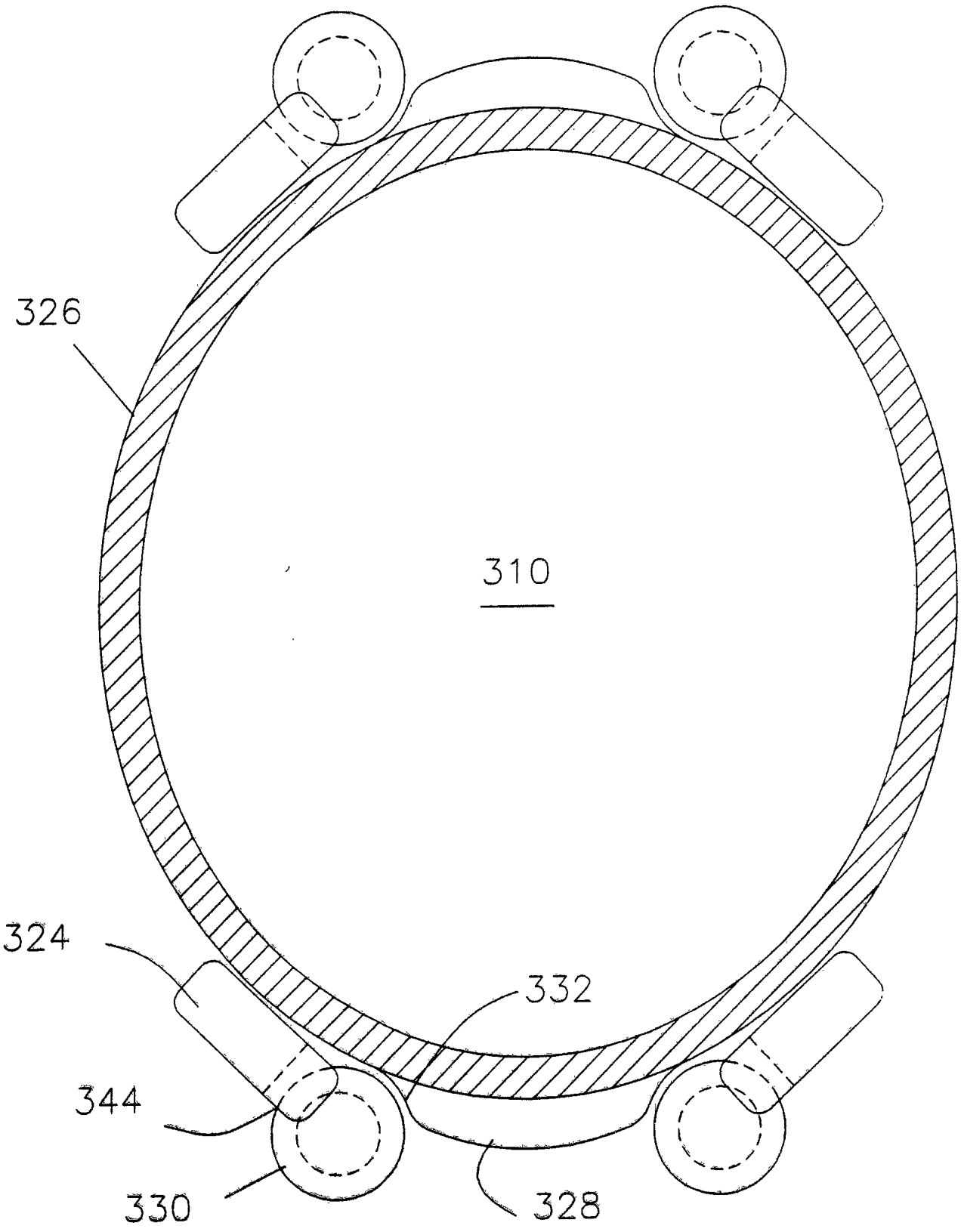

FIG 22

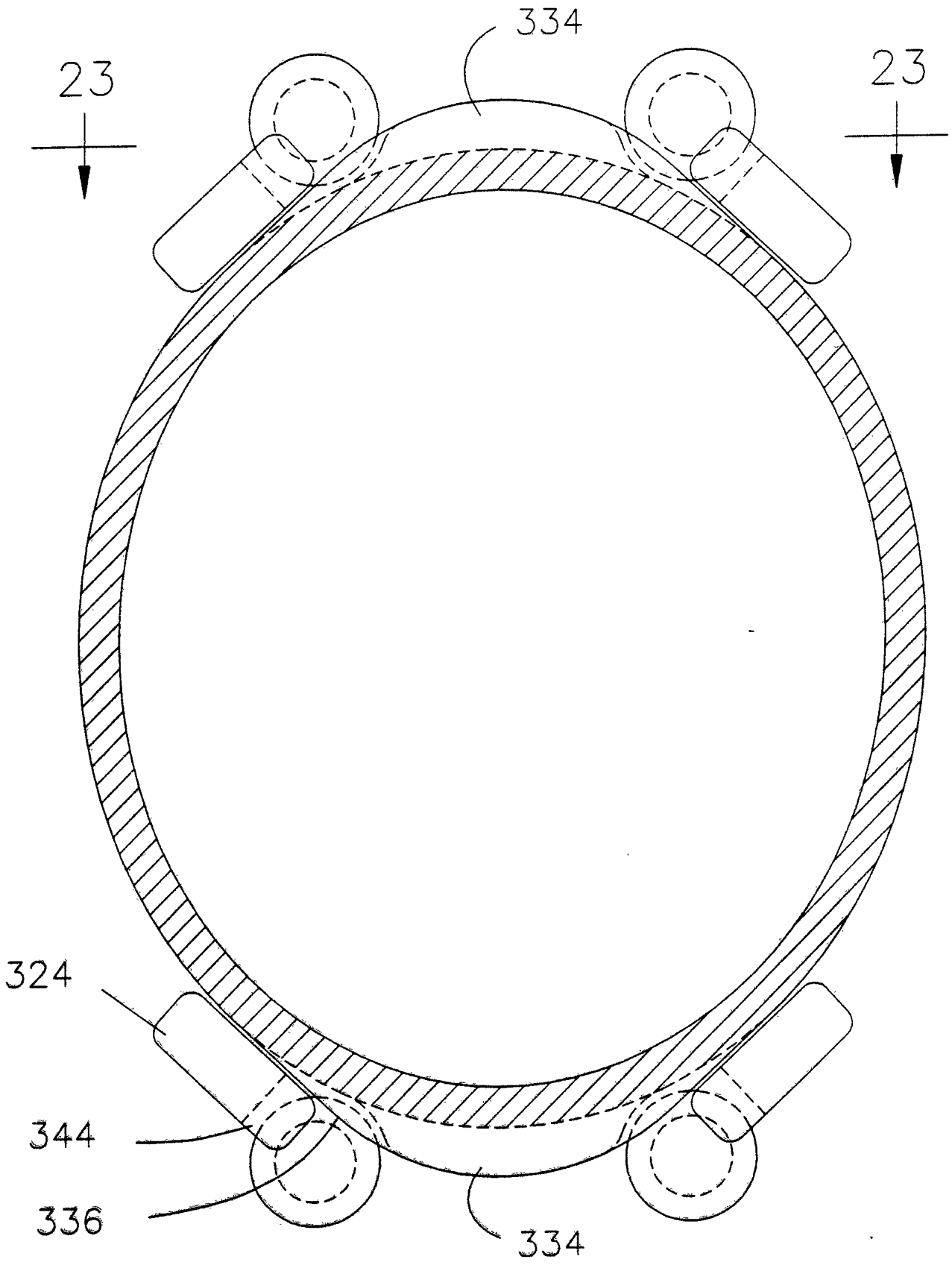

FIG 23

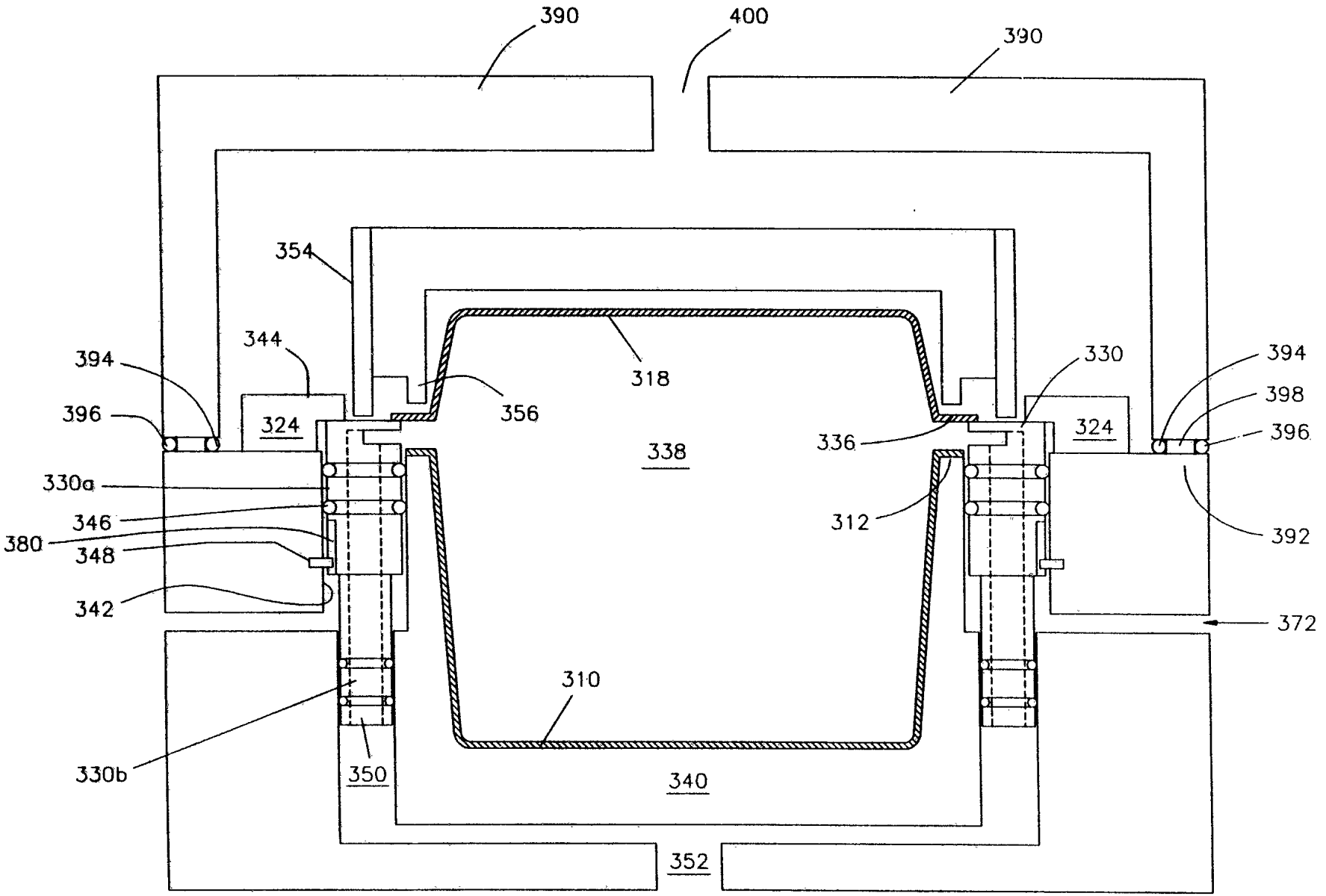
390
400
390
354
344
394
396
324
356
318
330
394
398
396
324
336
338
330a
346
380
348
342
312
392
372
310
330b
350
340
352

FIG 24

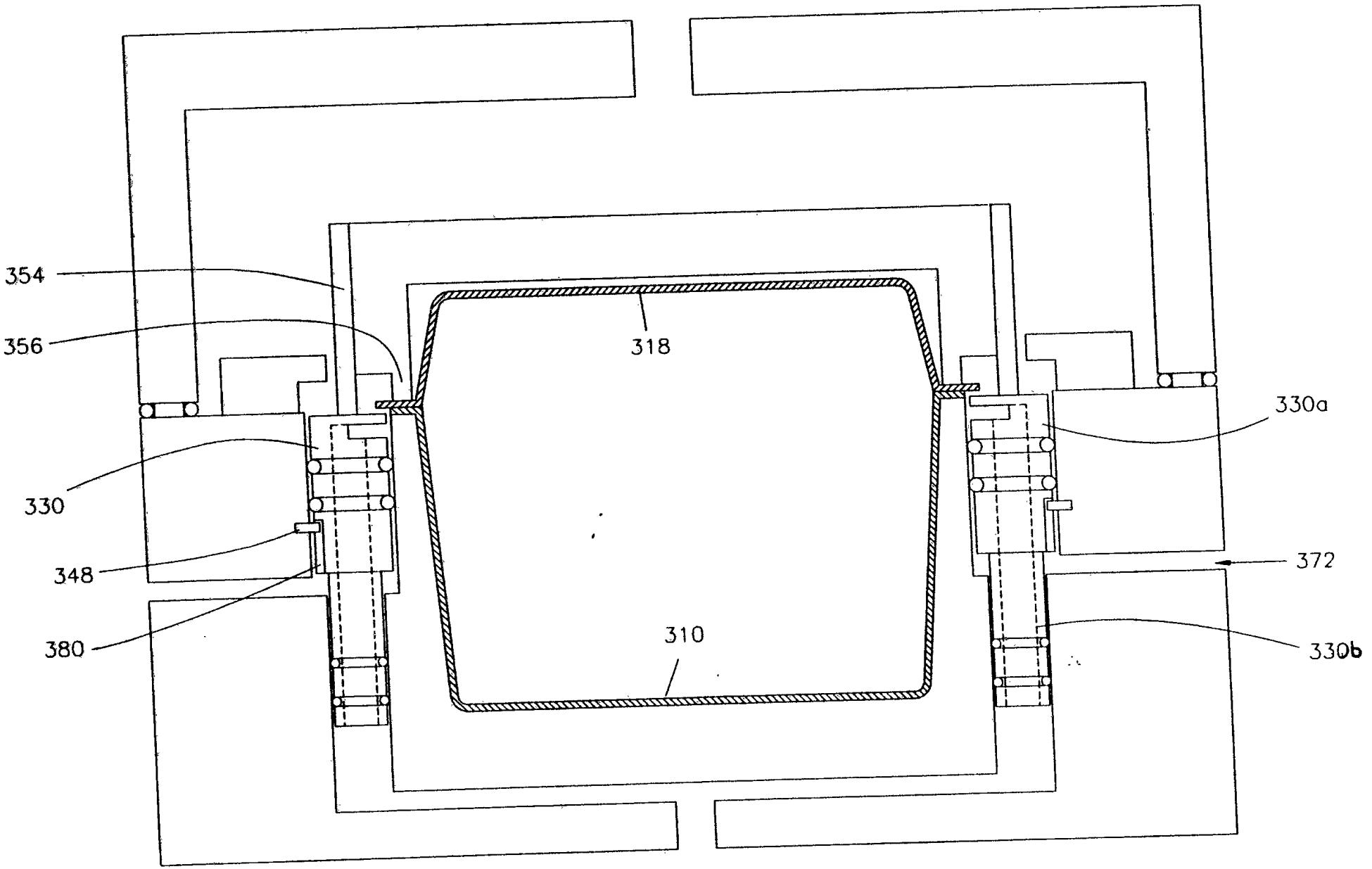

FIG 25

