March 13, 1934. H. B. TOWNSLEY 1,951,262

FUEL MIXING DEVICE

Filed July 22, 1932 4 Sheets-Sheet 1

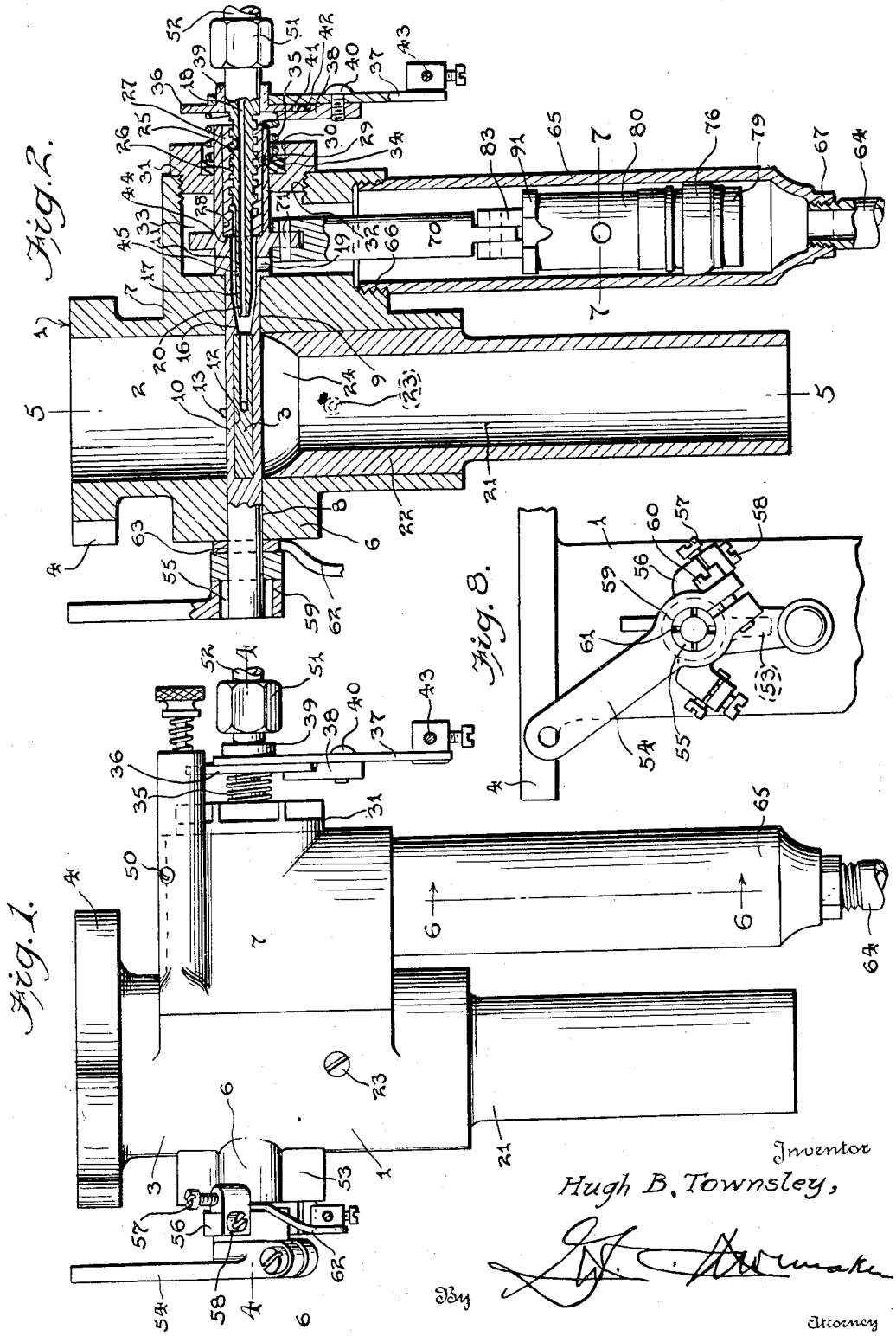

Fig. 2.

Fig. 3.

Fig. 1.

Inventor
Hugh B. Townsley,
By
Attorney

March 13, 1934. H. B. TOWNSLEY 1,951,262

FUEL MIXING DEVICE

Filed July 22, 1932 4 Sheets-Sheet 2

Fig. 3.

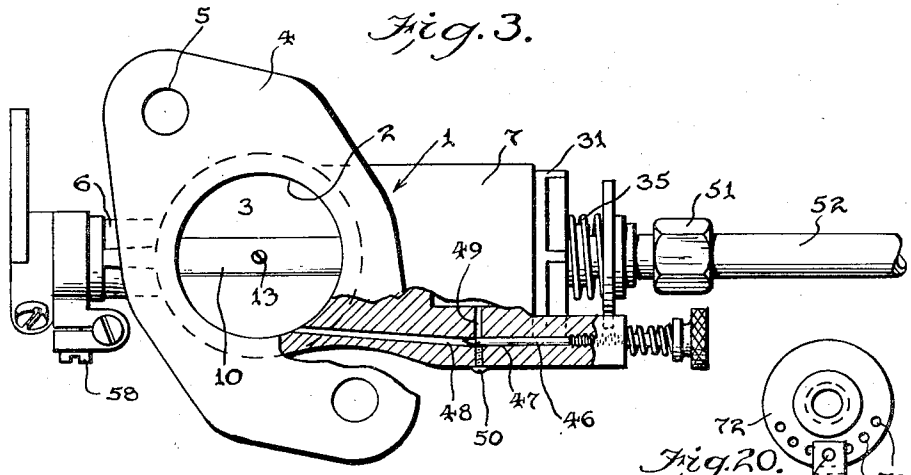

Fig. 20.

Fig. 4.

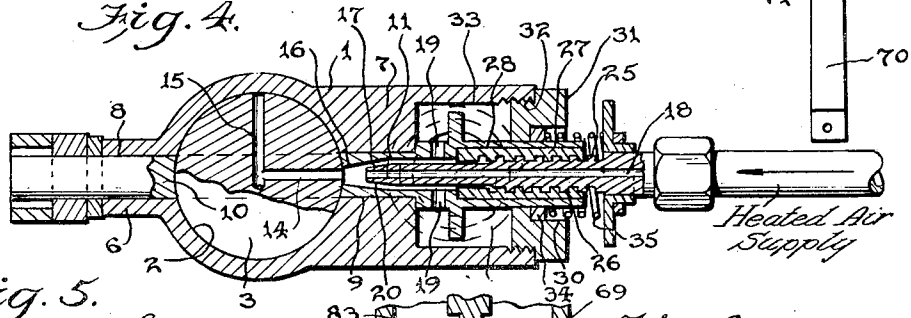

Fig. 5.

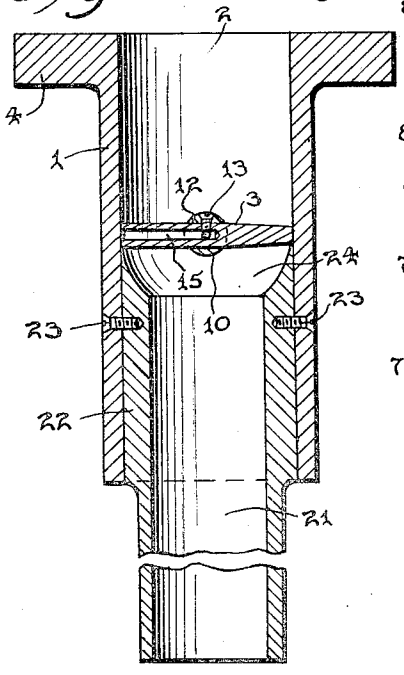

Fig. 6.

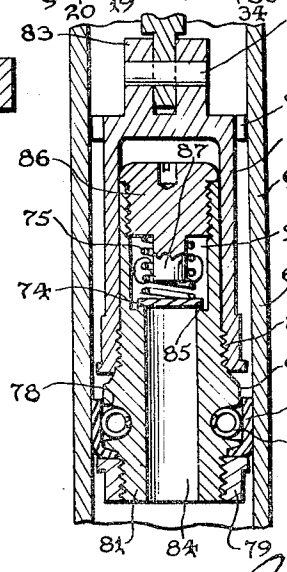

Fig. 7.

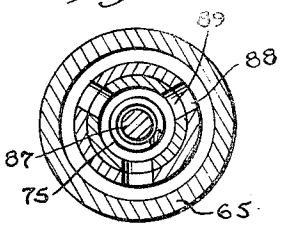

Inventor
Hugh B. Townsley,

By

Attorney

March 13, 1934. H. B. TOWNSLEY 1,951,262

FUEL MIXING DEVICE

Filed July 22, 1932 4 Sheets-Sheet 3

Fig. 10.

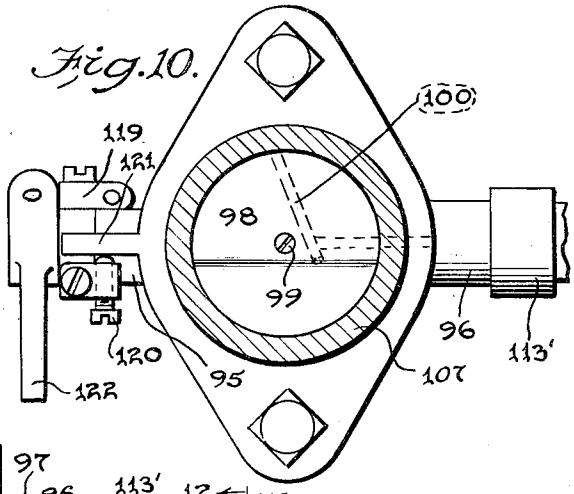

Fig. 9.

Fig. 11.

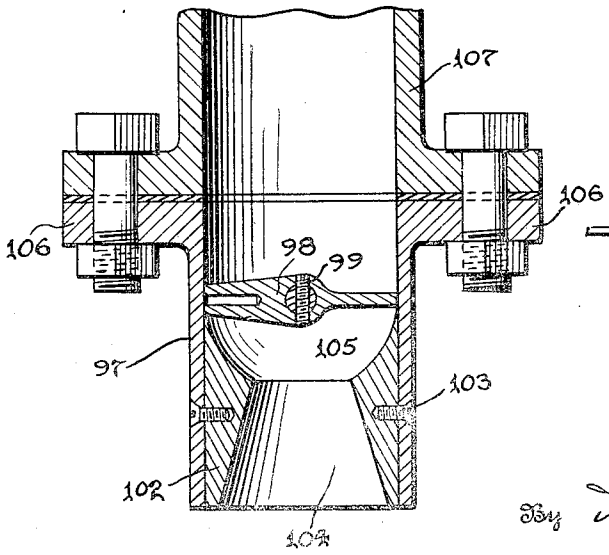

Fig. 12.

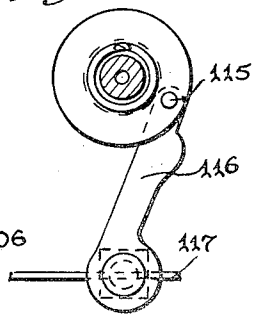

Fig. 13.

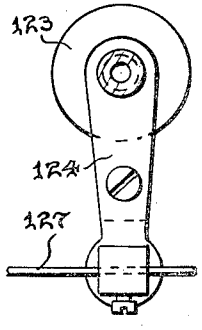

Inventor

Hugh B. Townsley,

By

Attorney

March 13, 1934. H. B. TOWNSLEY 1,951,262

FUEL MIXING DEVICE

Filed July 22, 1932 4 Sheets-Sheet 4

Fig. 14.

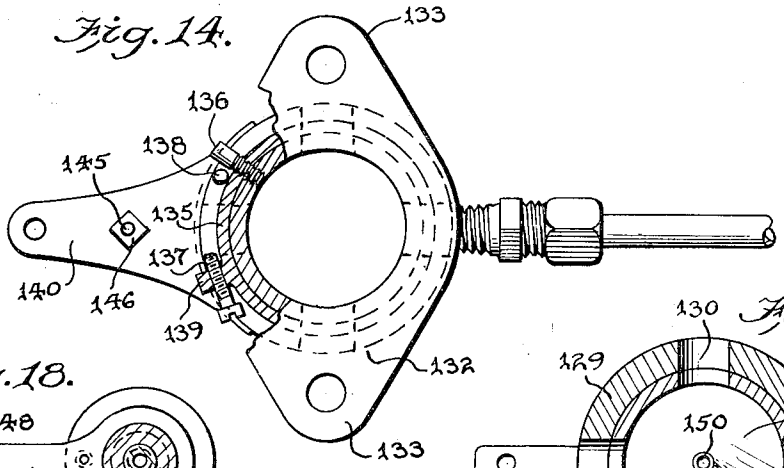

Fig. 16.

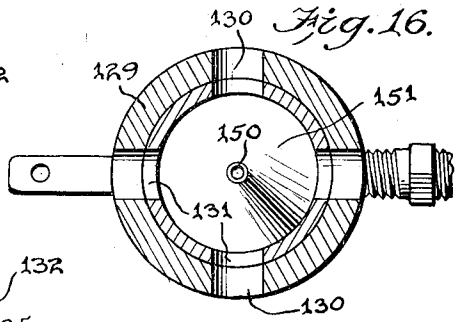

Fig. 18.

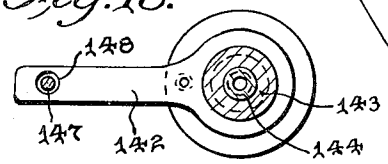

Fig. 15.

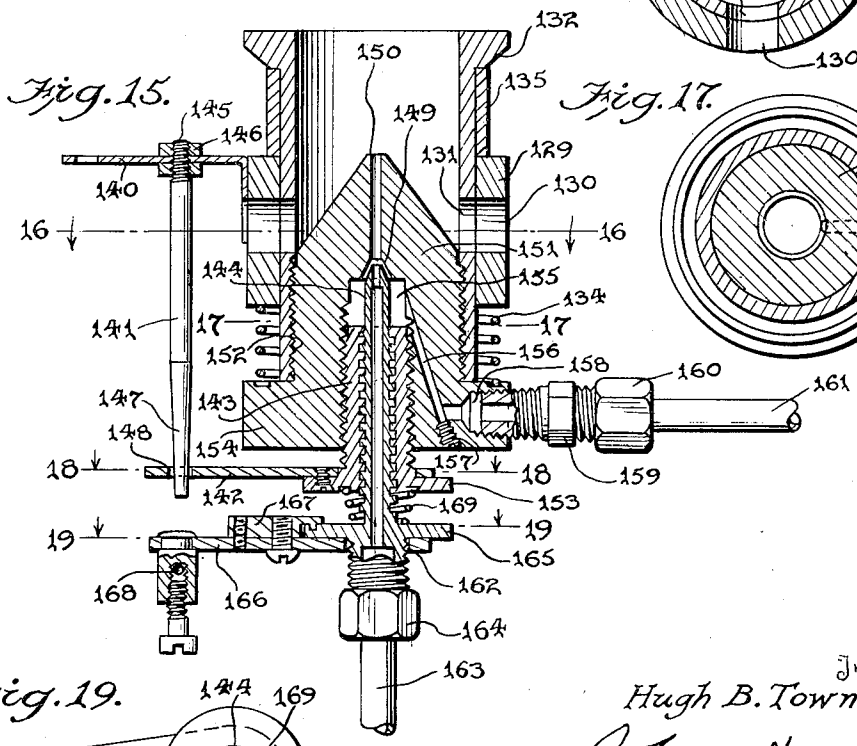

Fig. 17.

Fig. 19.

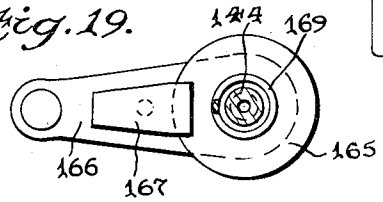

Inventor

Hugh B. Townsley,

By

Attorney

Patented Mar. 13, 1934 1,951,262

UNITED STATES PATENT OFFICE

1,951,262

FUEL-MIXING DEVICE

Hugh E. Townsley, Minneapolis, Minn.

Application July 22, 1932, Serial No. 624,100

17 Claims. (Cl. 261—34)

The invention relates to a fuel mixing device.

The object of the present invention is to provide a fuel mixing device designed to take the place of the ordinary carburetor for internal combustion engines and operable by suction of the engine and adapted to draw fuel directly from the supply tank without the use of a float and chamber or the aid of a pump or vacuum tank thereby greatly simplifying and lessening the cost of construction of the means for mixing air and gas for the fuel charges of an internal combustion engine.

A further object of the invention is to provide a fuel mixing device of this character equipped with means for contacting the fuel drawn from the supply tank with a small flow of hot air so that only a small proportion of the air is heated and the rest of the air mixing with the fuel is not heated and has greater expanding power in the cylinders of the engine than is the case where the main volume of the air is heated in a carburetor.

A further object of the invention is to provide a fuel mixing device adapted to feed liquid fuel through a hollow throttle shaft and capable of enabling a suction jet to mix air and gas and also to draw fuel from a lower level directly from a supply tank without the aid of auxiliary devices.

Another object of the invention is to provide a fuel mixing device equipped with a needle valve for controlling the flow of fuel through the hollow throttle shaft and automatically operated by the opening and closing of the butterfly valve so that the flow of fuel will automatically increase with the opening of the butterfly valve and will be automatically diminished in the closing movement of the said valve.

It is also an object of the invention to provide a fuel mixing device adapted to operate in any position from an upright position to an upside down position so as to be adapted particularly for use on aeroplane motors.

Another object of the invention is to provide a fuel mixing device having a fuel outlet located at the periphery of the butterfly valve whereby the different positions of the butterfly valve in the various adjustments thereof will render the mixture more uniform as a fuel outlet and will always be at the point of the highest efficiency due to the butterfly valve deflecting the air in the different adjustments of the said valve.

Another object of the invention is to provide a fuel mixing device adapted to permit small dirt, lint and even drops of water to pass through its valve without trouble so that there will be no liability of the feed of the fuel through the mixing device being stopped by small dirt, lint and drops of water as is the case with the ordinary carburetor.

It is also an object of the invention to provide a fuel mixing device adapted to permit idling of an engine without excessive waste of gas and equipped with means for breaking the vacuum or suction and for applying fuel under pressure to the mixing device to enable the throttle to be thrown wide open or at any intermediate position from the idling position and the engine to respond accordingly.

With these and other objects in view, the invention consists in the construction and novel combination and arrangement of parts hereinafter fully described, illustrated in the accompanying drawings and pointed out in the claims hereto appended, it being understood that various changes in the form, proportion and minor details of construction, within the scope of the claims, may be resorted to without departing from the spirit or sacrificing any of the advantages of the invention.

In the drawings:—

Figure 1 is an elevation of a fuel mixing device constructed in accordance with this invention and illustrating the preferred form of the same, the mixing device being equipped with a booster.

Fig. 2 is a central longitudinal sectional view of the same.

Fig. 3 is a plan view partly in section to show the manually adjustable needle valve.

Fig. 4 is a horizontal sectional view on the line 4—4 of Fig. 1.

Fig. 5 is a longitudinal sectional view on the line 5—5 of Fig. 2.

Fig. 6 is a detail longitudinal sectional view on the line 6—6 of Fig. 1 illustrating the construction of the booster.

Fig. 7 is a transverse sectional view of the booster on the line 7—7 of Fig. 2.

Fig. 8 is a detail end elevation illustrating the manner of mounting the throttle valve.

Fig. 9 is a longitudinal sectional view of a fuel mixing device illustrating a simpler form of the invention, the booster being omitted and the fuel line being directly connected with the hollow throttle shaft.

Fig. 10 is a plan view of the same.

Fig. 11 is a longitudinal sectional view taken substantially on the line 11—11 of Fig. 9.

Fig. 12 is a detail sectional view taken substantially on the line 12—12 of Fig. 9.

Fig. 13 is a similar view taken substantially on the line 13—13 of Fig. 9.

Fig. 14 is a plan view partly in section illustrating another form of fuel mixing device.

Fig. 15 is a central longitudinal sectional view of the same.

Fig. 16 is a transverse sectional view on the line 16—16 of Fig. 15.

Fig. 17 is a transverse sectional view on the line 17—17 of Fig. 15.

Fig. 18 is a detail transverse sectional view on the line 18—18 of Fig. 15.

Fig. 19 is a similar view on the line 19—19 of Fig. 15.

Fig. 20 is a detail view of an eccentric flange and connecting rod for operating the booster.

Referring particularly to Figs. 1 to 8 inclusive of the drawings in which is illustrated the preferred embodiment of the invention 1 designates a main casting or body consisting of a shell provided with a cylindrical longitudinal opening 2 constituting the main passage to the intake manifold of an internal combustion engine and controlled by a throttle valve 3 of the butterfly type and which it will be noted has angular movement about the axis thereof in passing from open position to closed position and in passing from closed position to open position for the valve. The longitudinal opening 2 provides a main passageway of the fuel mixing device which may be and often is referred to as a mixing chamber passage or even as a main mixing chamber passage or passageway. The body 1 which is of approximately cylindrical form is provided at one end with laterally extending lugs 4 having openings 5 for the reception of bolts or other suitable fastening devices for securing the body to the intake manifold of an internal combustion engine. The fuel mixing device which is adapted for use in any position and which is applicable to aeroplane engines, automobile engines and the like, is provided at opposite sides with enlargements 6 and 7 having aligned bearing openings 8 and 9 in which is mounted a hollow throttle shaft 10 provided with a longitudinal or axial bore or opening 11 extending inwardly from one end of the throttle shaft to a slot or opening 12 extending entirely through the throttle shaft and receiving the throttle valve which is detachably secured in the said opening 12 by means of a set screw 13 or other suitable fastening device.

The butterfly valve is provided with diametrically arranged passages 14 and 15 disposed at right angles to each other and communicating at their inner ends at the center of the butterfly valve, as clearly illustrated in Fig. 4 of the drawings. In short, it will be noted that the passages 14 and 15 provide or constitute a fuel delivery section of a fuel supply passage or passageway with which the mixing device is provided and that this fuel delivery section or at least a part thereof is coaxial with, viz., extends along the axis of the throttle valve, whereby fuel is delivered through the valve into the air, the control of the flow of which air is under the direct influence of the throttle valve and is dependent upon the position of the throttle valve.

The passage 14 which is arranged co-axially with the throttle shaft communicates at its outer end at the periphery of the butterfly valve with the inner end of the longitudinal bore or passage 11 which is provided at its inner end with a tapered valve seat 16 with which cooperates an automatically adjustable needle valve 17 having a longitudinal bore or passage 18 for introducing a small volume of hot air into the fuel which enters the longitudinal opening 11 of the throttle valve through laterally extending ports or openings 19. This needle valve 17 may be referred to as an automatically operated needle valve or as an automatically positioned needle valve since it is operatively associated with the butterfly valve so that it is automatically operated or positioned relative to the seat as the butterfly valve is operated or positioned and it will also be noted that this positioning of the needle valve effects a longitudinal or axial movement of the needle valve in respect to the throttle valve with which it is operatively associated. The fuel which is drawn by the suction of the engine through the ports 19 directly from the fuel line without the aid of a vacuum tank or fuel pump is controlled by the automatically operated needle valve 17 which has a tapered terminal portion 20 to cooperate with the tapered valve seat 16 of the rotatable shaft. The fuel entering the ports 19 passes around the needle valve through the valve seat 16 when the latter is open and the small volume of heated air contacts with the fuel at or passing through and from the valve seat 16 and thoroughly breaks up and commingles with the fuel forming a rich mixture which passes through the passages 14 and 15 of the butterfly valve and into the cylindrical opening or the body 1. By this construction and arrangement only a small portion of the air is heated and the major portion of the air passing through the longitudinal opening 2 of the body 1 by not being heated has greater expansive force in the cylinders of an internal combustion engine than is the case where all of the air is heated, as for instance, the air used in connection with the ordinary carburetor. The body 1 is provided with a tubular extension 21 consisting of a sleeve or cylinder having an externally enlarged portion 22 which is secured in the longitudinal opening 2 at the anterior side of the butterfly valve by means of set screws 23 or other suitable fastening devices.

The enlarged portion 22 of the extension sleeve or cylinder 21 is flared interiorly at the inner end at 24 on the arc of movement of the periphery of the butterfly valve so as to provide a clearance for the same in the opening and closing movements thereof.

The automatically adjustable needle valve may be in the form of a screw and be provided with external screw threads 25 which engage internal screw threads 26 carried by and arranged interiorly of the throttle shaft. In the form of the invention illustrated in Figs. 1 to 8 inclusive, the internal screw threads of the throttle shaft are formed in a sleeve 27 fitted in an enlargement or counterbore 28 of the longitudinal opening of the throttle shaft and secured in the counterbore or enlargement by a set screw 29 located within a recess 30 of a threaded closure member 31 surrounding the throttle shaft and engaging interior screw threads 32 of an opening 33 in the enlargement 7 of the body 1. The closure member 31 which is in the form of a head or screw has a reduced inner portion which forms a shoulder for engaging the outer face of the enlargement 7 and it has a central opening for the reception of the throttle shaft.

The recess 30 in the outer face of the closure member 31 receives a packing 34 which fits around the throttle shaft and a coiled spring 35 is interposed between the packing and a circular flange 36 rigid with the needle valve and engaged by adjustable means consisting of a lever 37 and a

clamping plate 38. The flange 36 which may be connected with the throttle shaft in any suitable manner is shown in the present form of the invention provided with a sleeve 39 which is suitably secured to the outer end of the needle valve shaft. It will be noted that the needle valve 17 and the shaft or spindle thereof are coaxial with, viz., extend longitudinally along the axis about which the butterfly valve has angular movement and also that as the butterfly valve moves angularly to either closed or open position, the needle valve moves longitudinally or axially in respect to the butterfly valve and also respectively toward or from the valve seat 16 with which the needle valve functionally cooperates.

The clamping plate 38 which is fitted against one side of the lever 37 is recessed at its inner face to receive the flange 36 and it is secured to the lever 37 by means of a screw 40 and a lug 41. The lug 41 fits in an opening 42 in the lever 37 and the screw 40 which pierces the lever engages a threaded opening in the clamping plate. The lug prevents rotary movement of the clamping plate on the screw 40 which is adapted to be tightened to firmly clamp the flange 36 between the lever 37 and the clamping plate. When the screw 40 is loosened the needle valve is adapted to be adjusted by rotating it in either direction to obtain the desired result and after such manual adjustment it is clamped to the lever 37 and remains stationary in such adjustment with respect to rotary adjustment unless manually operated by the lever 37. The threaded connection between the relatively stationary or ordinarily non-rotating needle valve on the one hand and the throttle shaft on the other hand provides for an automatic longitudinal adjustment of the needle valve and the revolution of the throttle shaft incident to the full opening and closing movement of the butterfly valve will through the said threaded connection automatically move the needle valve inwardly and outwardly to open and close the same so that when an opening movement is imparted to the throttle valve the needle valve will be simultaneously moved outwardly to increase the feed of fuel as the feed or supply of air is increased and a closing movement of the throttle valve will move the needle valve inwardly and diminish the feed of the fuels as the amount of air is reduced.

The lever 37 is connected with a choke wire 43 which is designed to extend through the dash of an automobile or other suitable point for enabling the needle valve to be manually operated to increase the supply of fuel for starting when an engine is cold. After the engine starts running the choke wire will hold the lever and the automatically adjustable needle valve against rotary movement and the said needle valve will then be automatically operated through the operation of the throttle valve.

The threads of the sleeve 27 terminate short of the inner end thereof and leave a shoulder 44 or projection which is adapted to limit the inward movement of the needle valve, but any other suitable means may, of course, be provided for this purpose.

The automatically positionable needle valve is provided with a relatively fine port 45 which when the needle valve is closed, communicates with the passage of the throttle shaft beyond the valve seat and permits a small amount of gas to pass through the wall of the needle valve and through the longitudinal passage thereof to the passages of the butterfly valve for supplying a small amount of fuel for idling. In practice the amount of fuel supplied by the port 45 will be insufficient for this purpose and a manually adjustable needle valve 46 is mounted in a bore 47 of the body 1 for controlling a relatively small fuel passage 48 extending from the opening 2 at the inner side of the butterfly valve to and communicating with the opening or chamber 33.

The manually operable needle valve 47 is located beyond the passage for the heated air and its adjustment is not affected by the heat so that when the manually adjustable needle valve 47 is set at a proper adjustment for idling it does not have to be changed as is the case with a needle valve which, after an engine starts running, becomes heated and requires further adjustment. The manually adjustable or manually positionable needle valve 47 is of the ordinary construction and the bore or passage 48 and the branch passage 49, which extend to the chamber or opening 33, may be readily drilled in the body, the outer portion of the opening formed by drilling the branch passage 49 being closed by a screw 50, as clearly illustrated in Fig. 3 of the drawings.

The outer end of the automatically adjustable or automatically positionable needle valve is provided with a coupling 51 for connecting the longitudinal passage of the needle valve 17 with a copper tube 52 for supplying the heated air to the mixing device. The coupling 51 which may be of any desired construction permits a limited longitudinal movement of the needle valve independently of the copper tube 52 so that the latter does not interfere with the automatic operation of the needle valve. In practice, the copper tube will extend along or contiguous with the exhaust manifold and it may have its outer terminal portion arranged in the upper portion of the radiator of an automobile in order that moist vapor may be supplied to the mixing device.

The hot air tube is designed to extend from the top chamber of the radiator and to extend down to and through the exhaust pipe (not shown) and then to the hollow automatically adjustable needle valve. The pipe 52 gets very hot and pulls some of the moist vapor from the top of the radiator. The vapor entering the pipe 52 is converted into steam after passing through the exhaust manifold and this steam or moist vapor assists in breaking down the fuel and the moisture helps to hold down the amount of carbon making a smoother and better pulling motor, but the fuel mixing device would work successfully without the pipe 52 extending to the radiator and very satisfactory results are obtained even without extending the pipe 52 through the exhaust manifold. The device will operate without the aid of heat but it has been found by practice that better mileage is obtained with the use of heat and that the percentage of air that is heated is so small that it leaves the greatest volume of air with its full expansion left for the explosion.

The lower portion 53 of the enlargement 6 forms a stop for a throttle lever 54 mounted on and clamped to a sleeve 55 which is arranged on one end of the throttle shaft. The sleeve is provided with downwardly diverging arms 56 located at opposite sides of the stop 53 and adapted to engage the same to limit the opening and closing movements of the butterfly valve. In order to provide an accurate adjustment of the movement of the throttle lever the arms 56 are provided with screws 57 mounted in threaded openings of the arm 56.

The screws 57 are adapted to be adjusted to engage the stop 53 and said arms 56 are split at the threaded openings of the screws 57 and the split portions are connected by clamping screws 58 which clamp the split portions against the screws 57 whereby the latter are securely held at any adjustment. The throttle lever 54 which is provided adjacent one end with an opening 59 to receive the sleeve 55 is split beyond the opening 59 and the split portions are connected by clamping screw 60 which clamps the throttle lever 54 securely on the sleeve 59. The sleeve is also split at a plurality of points at 61 and the clamping of the split portion of the throttle lever 54 against the sleeve also clamps the split portion of the sleeve firmly in engagement with the throttle shaft so that the single clamping screw 60 secures both the lever and the sleeve to the throttle shaft. The throttle lever 54 is designed to be connected with the foot accelerator of an automobile or other motor vehicle and in order to provide for a manual adjustment of the throttle shaft an auxiliary throttle lever 62 is fulcrumed on the throttle shaft and is arranged between the arms 56 and is adapted to be shifted to engage either one of the arms for operating the throttle shaft. The auxiliary throttle lever 62 is provided at one end with an opening 63 to receive the throttle shaft and the said lever is arranged between the sleeve 55 and the enlargement 6 of the body 1. The auxiliary throttle lever is bent intermediate of its ends to extend it between the arms 56 and its outer or free end may be connected with any suitable operating means.

The main fuel line 64 which is designed to extend directly to a supply tank may, as hereinafter fully described, be connected directly to the body 1, but in the preferred form of the invention, the fuel line 64 is connected with a booster which is normally inoperative but which is adapted to function when the accelerator is operated suddenly to increase the speed of the engine either from an idling position or any other position. The booster comprises in its construction a cylinder 65 exteriorly threaded at one end 66 and screwed into a threaded opening in the body communicating with the gas receiving chamber 33. The other end 67 of the cylinder 65 is interiorly threaded to receive the adjacent threaded end of the fuel line. Within the cylinder 65 operates a piston or plunger 68 connected at its inner end by a pivot pin 69 to the outer end of a connecting rod 70 which is connected at its inner end by a pin 71 with an annular flange 72 preferably formed integral with the throttle shaft and provided with an arcuate series of perforations 73 adapted to receive the pivot pin 71 to permit the inner end of the connecting rod to be arranged on a dead center or to be connected with the plunger either in advance or in rear of the dead center. The plunger 72 forms an eccentric and when the throttle shaft is rotated by the throttle lever the plunger 68 will be reciprocated. The plunger which is hollow to provide a passage for the fuel is provided with a check valve 74 which is normally open to allow the fuel to pass through the plunger without the passage of the fuel being affected by the operation of the plunger, but when there is a sudden application of the accelerator the throttle shaft is partially rotated to move the plunger quickly upwardly or inwardly, which operation when the engine is idling, is adapted to break the suction and force fuel under pressure into the engine to enable the latter to respond to the operation of the accelerator.

The suction when the engine is idling and in the normal operation of the throttle shaft lifts the valve 74 against the action of the spring 75 which is relatively light. This will enable the fuel mixing device to function without operating the booster so that there will be no excessive waste of gas in idling, but a sudden operation of the accelerator will result in a closing of the check valve 74 and the breaking of the suction which holds the check valve normally open and inoperative.

The plunger which may be of any desired construction is provided at the lower or outer portion with a packing 76 consisting of a leather cup but any other suitable material may, of course, be employed in the construction of the packing which is maintained in engagement with the walls of the cylinder by a circular coiled spring 77 arranged in an annular groove 78 in the plunger and interposed between the walls of the groove and the packing, as clearly illustrated in Fig. 6 of the drawings. The lower or outer end of the plunger is exteriorly threaded to receive a nut 79 which is adapted to adjust the packing and which is also removable to enable the packing 76 when worn out to be renewed.

The plunger is composed of upper and lower sections 80 and 81, the upper section consisting of a cylindrical shell receiving the upper portion of the lower section and having a threaded connection with the same at 82. The upper end of the upper section is provided with perforated ears 83 to receive the lower end of the connecting rod 70 and the pivot 69.

The lower section is provided with a central bore or opening 84 which forms a passage for the fuel and the upper portion of the said lower section 80 is counterbored to provide a seat 85 for the check valve 74 and to form a valve chamber for the check valve and the coiled spring 75 which engages the check valve. The spring is interposed between the check valve and a threaded plug 86. The plug 86 is screwed into the counterbore of the lower section of the plunger and is provided with a depending stem 87 which extends into the coiled spring 75 and maintains the latter in proper position with relation to the check valve 74. The upper and lower sections are provided with a plurality of registering openings 88 and 89 which form passageways for connecting the valve chamber 90 with the exterior of the plunger which above the packing is spaced from the walls of the cylinder 65 of the booster. The upper section 80 of the plunger is provided at the top with guiding portions 91 which are spaced apart to permit the fuel to pass freely upward from the booster to the fuel chamber 33 of the body. The threaded plug 86 is adapted to be adjusted to regulate the tension of the spring 75 and to enable the check valve to properly function automatically through sudden operations of the accelerator. The booster is entirely automatic in its operation and functions only when required. In practice the fuel line 64 will be provided with a suitable check valve to prevent the fuel from draining back into the storage tank or into the fuel line from the device. While the fuel mixing device is shown in an upright position in the accompanying drawings in the preferred form of the invention and also in the other forms of the invention it may be arranged in any other position and will properly function in any position.

Also while the fuel mixing device is designed to dispense with float valves, float chambers and

a fuel pump or vacuum tank of gravity feed or pressure systems, it may, of course, be used in connection with such auxiliary devices and can be applied to either side of a motor, but when applied to the left hand side of a motor the threads of the automatic needle valve will be left hand threads and when applied to the right hand side of the motor the threads will be right hand threads.

In Figs. 9 to 13 inclusive of the drawings is illustrated a simpler form of the invention in which a flexible fuel line pipe 92 is connected by an elbow coupling 93 with a hollow throttle shaft 94 mounted in transverse aligned bearing openings of enlargements 95 and 96 of a shell or body 97 and having a butterfly valve 98 secured to it by a screw 99 or other suitable fastening device which pierces the butterfly valve and the throttle shaft. The butterfly valve is provided with a fuel passage 100 forming a peripheral outlet for the fuel and extending from the periphery of the butterfly valve to and communicating with the fuel passage 101 of the throttle shaft. The butterfly valve 98 operates substantially the same as the butterfly valve heretofore described and the body 97 consists substantially of a cylinder forming a passage for the air from the outside atmosphere. Mounted within the outer or lower portion of the cylindrical body is a sleeve 102 detachably secured within the body by screws 103 or other suitable fastening devices and oppositely flared interiorly at 104 and 105.

The lower or outward flare 104 is substantially trunco-conical and the inner flare 105 has curved walls corresponding to the arc of movement of the butterfly valve and forming a clearance for the same. The body 97 is provided at its upper end with lugs 106 for connecting it with the intake manifold 107 of an internal combustion engine, as clearly illustrated in Fig. 11 of the drawings.

The throttle shaft which is angularly movable about its longitudinally extending axis is provided intermediate of the ends of its coaxial or longitudinal bore or opening with a valve seat 108 located at the inner end section of the fuel passage 101 and which inner end section is formed or provided by the inner portion of the longitudinal opening of the throttle shaft. The outer portion of the longitudinal opening of the throttle shaft is interiorly threaded at 109 to receive an exteriorly threaded automatically adjustable needle valve 110 which cooperates with the valve seat 108 and which is moved coaxially or longitudinally toward and from the valve seat by the angular rotary movement of the throttle shaft in the same manner as the automatically operable needle valve 17 heretofore described. The automatically operable needle valve 101 which has the tapered inner end to cooperate with the tapered valve seat 108 is provided with a central longitudinal passage 111 which communicates with a hot air tube 112 connected by a coupling 113 with the outer end of the said needle valve 110 and which is designed to supply hot air to the needle valve for causing a jet or stream of the same to impinge against the fuel at the valve 108 for breaking up the fuel and forming a rich gas in the same manner as that heretofore described in connection with the form of the invention illustrated in Figs. 1 to 8 inclusive.

The hot air tube 112 which is designted to be constructed of copper or any other suitable material, in practice will be heated by the exhaust pipe or manifold and it may extend to the upper chamber of a radiator for supplying moisture to the hot air stream of the automatically operable needle valve.

The hollow throttle shaft is provided contiguous to the enlargement 96 of the body with an enlargement 113 in which the elbow coupling or nipple 93 is mounted and which also contains the valve seat 108. The throttle valve is provided with an annular flange 114 at the outer end of its bore or longitudinal opening, to which is pivoted at 115 one end of a link 116 which is connected at its other end with a throttle rod 117 extending to a suitable operating device for manually rotating the throttle shaft for operating the butterfly valve. The throttle shaft has mounted on its other end a sleeve 118 provided with diverging arms 119 carrying adjustable screws 120 arranged to engage a stop 121 formed by a portion of the enlargement 95. The sleeve also has mounted on it a throttle lever 122 which is designed to be connected with the accelerator of an automobile or other motor vehicle. As the sleeve 118 and the throttle lever 122 are constructed and operated the same as the sleeve and throttle lever heretofore described, further description thereof is deemed unnecessary.

The threaded needle valve 110 is provided at its outer portion with an annular flange 123 integrally or otherwise connected with the valve and adjustably connected with a throttle lever 124 by a clamping plate 125 constructed similar to the clamping plate 38 heretofore described. The throttle lever 124 which is provided with an opening 126 to receive the needle valve is pivotally mounted thereon and when the clamping plate is loosened the flange and the valve are adapted to be turned in either direction to adjust the valve with relation to the valve seat 108 and a choke rod 127 extending to the dash of an automobile and adapted to be operated for supplying gas to the mixing device in starting an engine when the latter is cold. Also the adjustment of the needle valve by means of the clamping plate 25 will enable the needle valve to be properly set for idling and a coiled spring 128 is disposed on the needle valve and is interposed between the flange 123 and the flange 114 of the throttle shaft to form a friction device and prevent any accidental relative movement between the needle valve and the throttle shaft. The choke rod 127 holds the needle valve stationary in its rotary adjustment and when the throttle shaft is rotated the threaded needle valve will be moved toward and from the valve seat to open the valve and allow more gas to pass to the engine when the throttle valve is open and to reduce the passage at the valve seat as the throttle valve closes to diminish the fuel supplied to the engine as the air is reduced.

Various forms of throttle valves may, of course, be employed and in Figs. 14 to 19 inclusive of the drawings an angularly movable throttle valve 129 is employed.

The throttle valve 129 which has angular movement about a longitudinally extending axis thereof is in the form of a sleeve and is provided with a plurality of air inlet openings 130 adapted to register with a plurality of openings 131 in a cylindrical body 132 which is provided at the top with lugs 133 for bolting or otherwise securing the body of the device to the intake manifold of an engine. The throttle valve sleeve is capable of angular or rotary movement on the cylindrical body 132 and it is arranged between a lower sup-

porting spring 134 and a shoulder formed by a sleeve 135 provided with fixed and adjustable stops 136 and 137 which are arranged to be engaged by a projection 138 consisting of a pin mounted in the throttle valve and extending upwardly from the upper edge thereof. The projection 138 which may be of any other desired construction is located between the fixed and adjustable stops 136 and 137. The fixed stop consists of a threaded pin or screw mounted in the sleeve 135 and the body 132 as clearly illustrated in Fig. 14 of the drawings, and the adjustable stop 137 preferably consists of a screw mounted in a projecting lug 139 integrally or otherwise formed on the sleeve 135. By adjusting the screw or stop 137 the amount of movement of the throttle valve may be regulated and controlled.

The throttle valve is provided with a rigid projecting arm 140 designed to be connected with and operated by the accelerator of a motor vehicle and extending radially from the sleeve and secured intermediate of its ends to one end of a longitudinally connecting rod 141. The other end of the longitudinally operating rod is connected to an operating arm 142 extending radially from a threaded sleeve 143 in which is mounted an automatically adjustable or automatically positionable needle valve 144 that is movable longitudinally along or coaxially in respect to the axis about which the throttle valve 129 has angular movement.

The upper end 145 of the connecting rod 141 is threaded to receive clamping nuts 146 which engage the opposite faces of the throttle arm 140. The lower end 147 of the connecting rod 141 is tapered and extends through an opening 148 of the operating arm 142 of the threaded sleeve 143. By this construction the needle valve is automatically moved longitudinally or coaxially in respect to the throttle valve 129 and toward and from a valve seat 149 of a fuel passage 150 when the throttle valve is rotated to increase the supply of fuel when the supply of air is increased and to diminish the supply of fuel when the supply of air is reduced. It will thus be seen that the automatic operation of the needle valve with the throttle valve is substantially the same as the automatic operation of the needle valves with the butterfly valves of the forms of the invention heretofore described.

The fuel passage 150 is formed in a removable section 151 of the body 132, the removable section being in the form of a plug threaded into the body 132 at 152 and having a bore extending entirely through it to form the fuel passage 150. The upper portion of the section 151 is tapered and substantially conical, the conical portion being located opposite the openings 130 and 131 of the throttle valve 129 and the body 132. The longitudinal bore of the section 151 is enlarged or counterbored at the lower portion and interiorly threaded to receive the threaded sleeve 143 which is interiorly threaded for the reception of the threaded needle valve 144.

The sleeve 143 is provided at its outer end with an annular flange 153 to which the operating arm is secured and when the sleeve is partially rotated it moves the needle valve inwardly and outwardly. The section 152 is also enlarged at the lower end to form a head 154 which abuts against the lower end of the body 132 and which also forms a shoulder or seat for the coiled spring 134. The inner portion of the counterbore of the section 151 forms a chamber 155 located beyond the inner end of the sleeve 143 and communicating with the inner end of a longitudinal fuel passage 156 formed by a relatively small bore and disposed at an angle to the central longitudinal opening or bore of the said section 151. The fuel passage 156 is inclined as clearly illustrated in Fig. 15 of the drawings, and its outer end is closed by a screw plug 157 and it communicates adjacent its outer end with a transverse opening 158 which is threaded for the reception of a nipple 159 and the latter is connected by a suitable coupling 160 with the fuel line 161 designed to extend directly to a fuel tank similar to the fuel line of the arms of the mixing device heretofore described.

The needle valve which has a tapered upper end is provided with a longitudinal passage 162 for a stream of hot air which is supplied by a hot air pipe 163 connected by a coupling 164 to the outer end of a needle valve. The upper end of the needle valve is tapered to cooperate with the tapering valve seat 149 and the hot air either with or without vapor is discharged into and breaks up and commingles with the fuel from the fuel passage 156 as the same passes around the tapered end of the needle valve and a rich mixture is formed which passes through the bore or passage 150 and is discharged into the upper portion of the body 132 where it commingles with the air which enters through the openings 130 and 131.

The needle valve is provided adjacent its outer end with an annular flange 165 which is adjustably connected with a choke lever 166. The choke lever 166 is mounted on the outer end of the needle valve and is adjustably clamped to the annular flange 165 by a clamping plate 167 constructed similar to the clamping plates 38 and 125 heretofore described. The choke lever 166 is connected with a choke rod 168 which is designed to extend to the dash of an automobile and which is operated to open the needle valve independently of the operation of the throttle valve. The choke rod normally holds the needle valve in its rotary adjustment and a coiled spring 169 is interposed between the annular flange 153 of the sleeve 143 and the annular flange 165 of the needle valve to form a friction device for preventing accidental relative rotary movement of the said parts.

Reference has heretofore been made to the fuel passages which are controlled by the automatically operated or automatically positioned needle valve for example to a fuel passage or passageway such as that controlled by the needle valve 17 of Figures 1 and 2, 110 of Figure 9, or 144 of Figure 15. Each fuel passage controlled by a needle valve such as that just mentioned may be referred to as the normal or main fuel supply passage. The fuel passage controlled as by the manually adjustable or manually positionable needle valve 46 of Figure 3 may be referred to as an auxiliary fuel passage or hand controlled fuel passage.

In all of the forms of the fuel mixing device the operating means for the adjustment and operation of the automatically operated needle valve are arranged exteriorly of the mixing device so that ready access may be had to the adjusting means and after the mixing device is properly adjusted for idling the operation of the fuel or needle valve will be automatic and the said valve will open and close with the throttle valve.

What is claimed is:

1. A fuel mixing device for internal combustion engines including a body having a main passage, said fuel mixing device being provided with

a fuel passage communicating with the main passage and having a valve seat, a throttle valve controlling the flow of air through the main passage, an automatically operable threaded needle valve cooperating with the valve seat and controlling the flow of fuel through the fuel passage and having a longitudinal opening for discharging a stream of air into the fuel to break up the same and form a rich mixture before the fuel is discharged into the main passage, mechanism connecting the throttle valve with the needle valve having means rotatably engaging the threads of the needle valve to move the latter toward and from the valve seat when the throttle valve is closed and opened, and means for effecting a manual rotary adjustment of the needle valve to set the same and for also holding the needle valve in its rotary adjustment without interfering with the automatic operation of the needle valve by the said mechanism, the last mentioned means including a choke rod for opening and closing the needle valve independently of the automatic operation of the needle valve.

2. A fuel mixing device for internal combustion engines including a body having a main passage, an angularly movable throttle shaft mounted in the body and provided with a longitudinal opening forming a fuel passage communicating with the main passage of the body, said throttle shaft being provided at the longitudinal opening with internal screw threads, an exteriorly threaded automatically operating needle valve engaging with said internal threads, a butterfly valve connected with and operated by the angular movement of the throttle shaft, means for angularly moving the throttle shaft to open and close the butterfly valve, and means for holding the needle valve normally against rotary movement whereby the needle valve will be moved longitudinally by the angular movement of the throttle shaft to open and close the needle valve as the butterfly valve opens and closes.

3. A fuel mixing device for an internal combustion engine including a body having a main passage and provided also with a fuel chamber, an angularly movable throttle shaft mounted in the body and provided with a a longitudinal opening forming a fuel passage communicating with the main passage and with the said chamber of the body, needle valve mounted in the longitudinal opening of the throttle shaft for controlling the flow of fuel through the passage of the said shaft, a butterfly valve connected with the throttle shaft and operated by the same, means for connecting the needle valve with the throttle shaft for moving the needle valve longitudinally to open and close the same when the butterfly valve is opened and closed due to angular movement thereof, a cylinder communicating with the said chamber of the body, a plunger operating within the cylinder and operatively connected with the throttle shaft whereby the plunger is reciprocated by the rotary movement of the said shaft, said plunger being provided with a passage for permitting fuel to pass through the same to the said chamber, and a check valve in the passage of the plunger adapted to be maintained in an open position by suction of the engine and capable of being closed by a sudden movement of the plunger to break the suction and compress and force fuel from the cylinder and chamber into the engine.

4. A fuel mixing device for an internal combustion engine including a body having a main passage leading to the engine, said mixing device being constructed so as to provide a fuel passage communicating with the main passage, a throttle shaft mounted in the body, a butterfly valve connected with and operated by the throttle shaft, a cylinder communicating at one end with the fuel passage and designed to be connected at the other end with a fuel supply, a plunger operating in the cylinder and composed of upper and lower sections, the lower section being provided with a longitudinal bore and counterbored at its upper portion to provide a valve seat, said sections being provided above the valve seat with registering openings, a check valve cooperating with the valve seat and adapted to be normally maintained in an open position by the suction of the engine and capable of being closed by a sudden upward movement of the plunger to break the suction and cause the plunger to compress fuel and force the same into the engine, and means for operatively connecting the plunger with the throttle shaft whereby the plunger is reciprocated by the opening and closing movements of the butterfly valve.

5. A fuel mixing device for an internal combustion engine including a body having a main passage leading to the engine, said fuel mixing device being constructed so that it is provided with a fuel passage communicating with the main passage, a throttle shaft mounted in the body, a butterfly valve connected with an operated by the throttle shaft, a cylinder communicating at one end with the fuel passage and designed to be connected at the other end with a fuel supply, a plunger operating in the cylinder and composed of upper and lower sections, the lower section being provided with a longitudinal bore and counterbored at its upper portion to provide a valve seat, said sections being provided above the valve seat with registering openings, and adjustable plug threaded into the upper end of the lower section of the plunger and having a depending stem, a check valve cooperating with the said valve seat of the plunger, a coiled spring disposed on the said stem and interposed between the plug and the check valve, the latter being adapted to be opened against the action of the spring by the suction of the engine and capable of being closed by a sudden upward movement of the plunger to cause the plunger to break the suction and compress and force fuel into the engine, and means for operatively connecting the plunger with the throttle shaft to cause the plunger to reciprocate with the opening and closing movements of the butterfly valve.

6. A fuel mixing device for an internal combustion engine including a body having a main passage leading to the engine, said fuel mixing device being constructed so as to provide a fuel passage communicating with the main passage, a throttle shaft mounted in the body, a butterfly valve connected with and operated by the throttle shaft, a cylinder communicating at one end with the fuel passage and designed to be connected at the other end with a fuel supply, a plunger operating in the cylinder and composed of upper and lower sections, the lower section being provided with a longitudinal bore and counterbored at its upper portion to provide a valve seat, said sections being provided above the valve seat with registering openings, an adjustable plug threaded into the upper end of the lower section of the plunger and having a depending stem, said plunger being provided at its lower portion with an exterior annular groove, a flexible packing carried by the plunger and surrounding the groove

and engaging the walls of the cylinder, a circular coiled spring mounted in the groove and engaging the packing to hold the same in contact with the cylinder, a check valve cooperating with the valve seat and adapted to be held in an open position by suction of the engine and to be closed by sudden upward movement of the plunger, and means for operatively connecting the plunger with the throttle shaft whereby the plunger is reciprocated in the cylinder.

7. A fuel mixing device for an internal combustion engine including a body having an air passage leading to the engine, the fuel mixing device being constructed so as to provide a fuel passage communicating with the air passage and so as to have a valve seat that provides a part of said fuel passage and through which valve seat the fuel must pass, a throttle valve for controlling the flow of atmospheric air through said air passage, which throttle valve is constructed so as to provide the delivery portion of said fuel passage, a fuel valve cooperatively related with the valve seat for controlling the flow of fuel through the fuel passage, and means for operatively connecting the fuel valve with the throttle valve whereby the fuel valve is gradually moved respectively from and toward the valve seat as the throttle valve is gradually opened and closed.

8. A fuel mixing device for an internal combustion engine including a body having a main passage leading to the internal combustion engine, an angularly movable throttle valve for controlling the flow of air through said main passage, the fuel mixing device being constructed so as to provide a fuel passage communicating with the main passage and controlled as to fuel flow therethrough by means of a fuel valve provided therefor, said fuel mixing device also being constructed so as to provide an auxiliary air passage for discharging a stream of air into the fuel delivered past the fuel valve to break up the fuel and form a rich mixture before the fuel is discharged into the main passage, which fuel passage has a delivery section that extends along and axially in respect to said throttle valve, the fuel valve being arranged so that a stem thereof extends along the axis of the throttle valve, and means for connecting the fuel valve through the stem thereof with the throttle valve whereby the fuel valve moves axially with respect to the throttle valve as the throttle valve moves angularly.

9. A fuel mixing device for an internal combustion engine including a body having a main passage leading to the engine, which fuel mixing device is constructed so as to provide a fuel passage communicating with the main passage and also so as to provide a valve seat constituting part of said fuel passage, an angularly movable throttle valve for controlling the flow of atmospheric air through the main passage, an automatically positioned fuel valve associated with the valve seat for controlling the flow of fuel through the fuel passage, which fuel valve has relative movement in respect to the throttle valve along the axis about which the throttle valve has angular movement, said fuel valve being provided with a relatively small passage for discharging a fine stream of air into the fuel to break up the fuel and form a rich mixture before the fuel is discharged into the main passage, and means for connecting the fuel valve with the throttle valve for operating the fuel valve to open and close the same as the throttle valve opens and closes.

10. A fuel mixing device for an internal combustion engine including a body having a main passage, means providing a fuel passage communicating with the main passage and having a valve seat, an angularly positionable throttle valve for controlling the flow of atmospheric air through the main passage, a needle valve cooperating with the valve seat for controlling the flow of fuel and movable toward and from the valve seat longitudinally along the throttle valve axis, said needle valve being provided with a longitudinal passage for distributing a stream of air into the fuel at the valve seat to break up the fuel and form a rich mixture before the fuel is discharged into the main passage, and means for connecting the needle valve with the throttle valve for moving the needle valve toward and from the valve seat as the throttle valve closes and opens.

11. A fuel mixing device for an internal combustion engine including a body having a main passage, said mixing device being constructed so as to provide a fuel passage communicating with the main passage and so as to provide a valve seat constituting part of said fuel passage, an angularly positionable throttle valve for controlling the flow of atmospheric air through the main passage, said throttle valve also providing a delivery section of the fuel passage, a needle valve cooperating with the valve seat for controlling the flow of fuel and longitudinally positionable along the axis of the throttle valve and in respect to the throttle valve, said needle valve being provided with a relatively small longitudinal passage for discharging a fine stream of air into the fuel at the valve seat to break up the fuel and form a rich mixture before the fuel is discharged into the main passage, a hot air pipe connected to the needle valve for supplying heated air to the longitudinal passage thereof, and means for operatively connecting the needle valve with the throttle valve for simultaneously respectively opening and closing the needle valve as the throttle valve opens and closes.

12. A fuel mixing device for an internal combustion engine including a body having a main passage, an angularly movable throttle shaft mounted in the body and having a longitudinal opening forming a fuel passage communicating with the main passage of the body, which throttle shaft is also constructed so as to have a valve seat, a butterfly valve connected with the throttle shaft and operated by the same, a needle valve relatively positionable in respect to said valve seat and mounted in the opening of the throttle shaft for controlling due to the longitudinal movement of the needle valve the flow of fuel through the throttle shaft to the main passage, said needle valve being provided with an air passage for discharging a stream of air into the fuel to break up the same and form a rich mixture before the fuel is discharged into the main passage, and means operatively associated with the throttle valve and the needle valve for simultaneously operating said valves so as to respectively open and close the needle valve as the throttle valve opens and closes.

13. A fuel mixing device for internal combustion engines including a body having a main passage, said fuel mixing device being constructed so as to provide a fuel passage communicating with the main passage and also so as to provide a valve seat that constitutes a part of said fuel passage, a throttle valve controlling the flow of air through the main passage, the threaded needle valve cooperating with the valve seat and controlling the flow of fuel through the fuel passage, which needle

valve has a longitudinal opening for discharging a stream of air into the fuel to break up the same and form a rich mixture of the air supplied through the needle valve and the fuel passing the needle valve before the fuel is discharged into the main passage, and mechanism connecting the throttle valve with the needle valve and having means rotatably engaging the threaded portion of the needle valve to move the latter toward and from the valve seat as the throttle valve closes and opens.

14. A fuel mixing device for internal combustion engines including a body having a main passage, the fuel mixing device being constructed so as to provide a fuel passage communicating with the main passage and so as to provide a valve seat that provides a part of the fuel passage, a throttle valve controlling the flow of air through the main passage, a threaded needle valve cooperating with the valve seat and controlling the flow of fuel to the fuel passage and having a longitudinal opening for discharging a stream of air into the fuel passing the valve to break up the same and form a rich mixture before the fuel is discharged into the main passage, mechanism connecting the throttle valve with the needle valve, said mechanism having means rotatably engaging the threads of the needle valve to move the latter toward and from the valve seat as the throttle valve closes and opens, and means for effecting a rotary adjustment of the needle valve to set the same and for also holding the needle valve in its rotary adjustment without interferng with the movement of the needle valve toward and from the valve seat as the throttle valve closes and opens.

15. A fuel mixing device for an internal combustion engine including a body having a main air passage and provided with a fuel chamber, said fuel mixing device also being provided with a valve controlled fuel passage for providing a main fuel passage leading from said chamber to the main air passage, an automatically operated needle valve for controlling the flow of fuel through said main fuel passage, said fuel mixing device also being provided with an auxiliary fuel passage leading from said chamber to the main air passage, and a manually controlled needle valve for permitting at will a flow of fuel from the chamber through the auxiliary fuel passage to said main air passage, a throttle shaft mounted in the body and having a longitudinal opening forming the delivery portion of the main fuel passage through which fuel is delivered into the main passage after passing the automatically operated needle valve, said automatically operated needle valve being mounted in the opening of the throttle shaft and controlling the flow of fuel through the passage of said shaft and provided with a longitudinal opening forming an air passage and also provided with an idling port leading from said chamber to the longitudinal passage of the needle valve.

16. A fuel mixing device for internal combustion engines including a body having a mixing chamber passage leading to the engine, which fuel mixing device is constructed so as to provide a main fuel passage communicating with the mixing chamber passage, an angularly movable throttle shaft mounted in the body, a butterfly valve connected with and operated by the throttle shaft, a cylinder constituting a part of the main fuel passage, a plunger operating in the cylinder and operatively connected with the throttle shaft whereby it is adapted to be reciprocated by the angular movement of the throttle shaft, said plunger having a fuel passage therethrough, and a check valve in the fuel passage of the plunger and mounted therewith and adapted to be maintained open by suction of the engine and capable of being closed by a sudden movement of the plunger to break the suction and cause the plunger to compress fuel and force the same through said main fuel passage into said mixing chamber passage.

17. A fuel mixing device for internal combustion engines including a body having a mixing chamber passage leading to the engine, said mixing device being constructed so as to provide a main fuel passage communicating with the mixing chamber passage, an angularly movable throttle shaft mounted in the body, a butterfly valve connected with and operated by the throttle shaft, a cylinder providing a part of said main fuel passage and designed to be connected with the fuel supply, a plunger operating in the cylinder and having a fuel passage therethrough, a connecting rod connected with the plunger, an eccentric element connecting the said rod with the throttle shaft, and a check valve in and for the fuel passage of the plunger and mounted on the plunger and adapted to be maintained open by the suction of the engine and capable of being closed by a sudden movement of the plunger to break the suction and to cause the plunger to compress the fuel and force the same into said mixing chamber passage.

HUGH B. TOWNSLEY.