Mar. 27, 1923. 1,449,420

W. A. J. KREAGER ET AL

APPARATUS FOR CLEARING OIL WELLS OF CLOGGING MATERIAL

Filed May 13, 1921

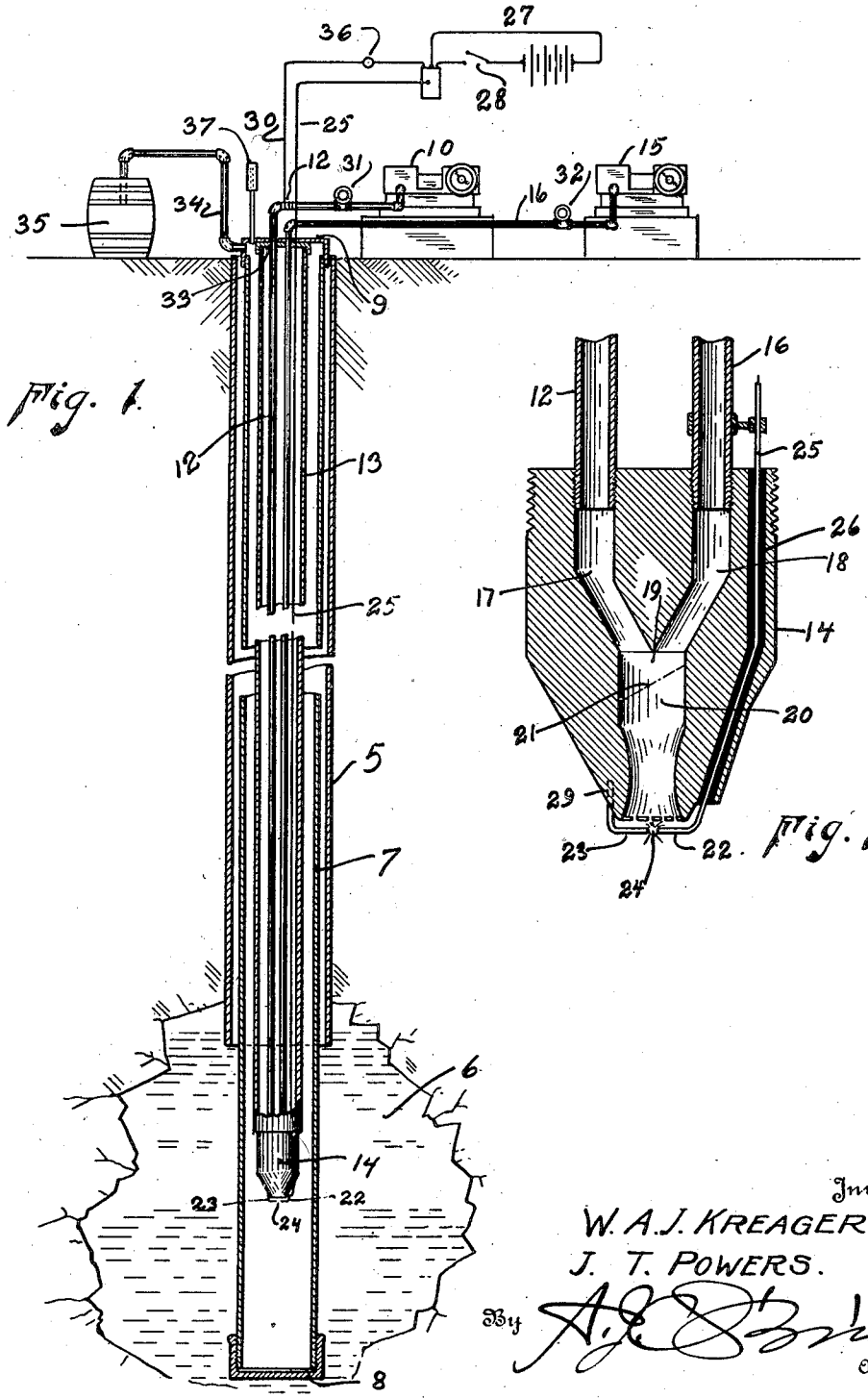

Fig. 1.

Fig. 2.

Inventor

W. A. J. KREAGER.

J. T. POWERS.

By A. J. Boyle

Attorney

Patented Mar. 27, 1923. 1,449,420

UNITED STATES PATENT OFFICE.

WILLIAM A. J. KREAGER, OF PUEBLO, AND JOHN T. POWERS, OF DENVER, COLORADO.

APPARATUS FOR CLEARING OIL WELLS OF CLOGGING MATERIAL.

Application filed May 13, 1921. Serial No. 469,300.

To all whom it may concern:

Be it known that we, WILLIAM A. J. KREAGER and JOHN T. POWERS, citizens of the United States, residing at 1511 West 16th Street, Pueblo, county of Pueblo, and Elks Club, the city and county of Denver and State of Colorado, respectively, have invented certain new and useful Improvements in Apparatus for Clearing Oil Wells of Clogging Material; and we do declare the following to be a full, clear, and exact description of the invention, such as will enable others skilled in the art to which it appertains to make and use the same, reference being had to the accompanying drawings, and to the characters of reference marked thereon, which form a part of this specification.

Our invention relates to apparatus for clearing oil wells of paraffin and other material which have accumulated to such an extent as to partially or entirely stop the flow of oil to the pump.

Briefly stated, the invention consists in introducing a combustible mixture to a burner within a casing which is passed downwardly through the well casing until its lower portion extends into the body of accumulated material which it is desired to liquefy and remove, provision being made for igniting the combustible mixure at the burner which is in the lower portion of the closed tubular member which forms a combustion chamber. As illustrated in the drawing, a suitable gas is delivered, under pressure, to the burner while the air, under pressure, is also supplied. Through the medium of an electric circuit whose battery is at the top of the well, a spark is produced at the burner for igniting the combustible mixture formed by the air and gas which, having been ignited and constantly supplied, the heating operation may be continued until the desired results are attained.

Having briefly outlined our improvement we will proceed to describe the same in detail, reference being made to the accompanying drawing in which is illustrated an embodiment thereof.

In this drawing:

Fig. 1 is a view partly in section and partly in elevation and diagrammatically illustrating our improved apparatus.

Fig. 2 is a fragmentary view illustrating the burner shown in section and on a larger scale.

The same reference characters indicate the same parts in both views.

Let the numeral 5 designate a well casing and 6 the sump below the casing in which the paraffin and other material combined therewith have become so hardened that the oil will no longer flow freely to the pump. Passed down through the well casing is a casing 7 which is of such size that it may be introduced easily and also freely removed. This casing is closed or capped at the bottom as shown at 8 and also at the top as shown at 9. A pump or other suitable device 10 is employed to introduce gas to a pipe 12 which extends downwardly through a conduit 13, its lower extremity being connected with a burner 14. Another pump or suitable air-forcing apparatus 15 is employed to introduce air through a pipe 16 which extends downwardly through the conduit 13 and is connected with the burner in any suitable manner. As shown, see Fig. 2, pipes 12 and 16 are connected at their lower ends with passages 17 and 18 formed in the burner, these two passages uniting at a point 19 above the lower extremity of the burner thus producing a mixing chamber 20 in which is located a foraminated diaphragm 21 which has a tendency to break up the gases and cause them to intermingle, thus facilitating the formation of a combustible mixture at the lower extremity of the burner where the gases escape. Also at the lower extremity of the burner are arranged two electrodes 22 and 23 which are spaced by a gap 24 where a spark is formed for igniting the mixture. The electrode 22 is a part of a conductor 25 which extends up through a passage 26 in the burner and thence through the conduit 13 to the battery device 27 which is of such structure and arrangement that a spark may be produced when the circuit is closed as by the operation of a suitable switch 28, the usual primary and secondary circuits being provided but which it is not necessary to explain in detail. The cooperating electrode 23 is grounded, being connected with the burner as shown at 29, while a wire or conductor 30 is connected with one of the pipes as 12 at the top of the well and continues to the battery completing the circuit when the switch 28 is closed.

The pipes 12 and 16 are respectively provided with pressure gauges 31 and 32 whereby the pressure of the air and gas will be in-

dicated and readily observable at the top of the well. It should be noted that the conduit 13 is connected at its lower extremity by means of suitable threads with the burner, its upper extremity being capped, as shown at 33, where the pipes 12 and 16 enter the conduit.

The upper extremity of the casing 7 is closed except for an opening communicating with a pipe 34 whose open extremity may extend slightly below the surface of water in a receptacle 35 in order to deaden the products of combustion or exhaust gases which rise through the casing 7 and escape at the top through the pipe 34.

From the foregoing description it is believed that our improved apparatus will be readily understood. Assuming that the apparatus is properly installed, the pump having been first removed, air and gas will be simultaneously delivered to the lower extremity of the burner where a spark from the ignition devices will ignite the combustible mixture. The air and gas will be continuously supplied and the combustion maintained until the lower extremity of the casing 7 becomes sufficiently hot to melt the paraffin or reduce to a liquid condition the clogging material in the well. As soon as the apparatus has properly performed its function it is removed and the pump introduced, after which the clogging material having been reduced to liquid form, may be readily removed.

If desired, a second gap 36 between the electric conductors may be properly protected at the top of the well so that a spark may be seen at this gap in which event it will be known that the electric apparatus or ignition devices are in operating condition.

It will be understood that as the combustion continues, the products resulting therefrom will rise to the top of the casing 7 and escape through the pipe 34.

Attention is called to the fact that we have illustrated, in a conventional way, a pyrometer 37 for determining the heat within the tube 7 which constitutes the combustion chamber. By means of this device the temperature may be known at all times.

We claim:—

1. Apparatus for clearing oil wells comprising a casing located within the well and closed at the bottom, a burner supported within the lower part of the casing, means for supplying the burner with combustible material in fluid form, means for igniting said material at the burner and means connected with the upper extremity of said casing for permitting the escape of the products of combustion.

2. Apparatus for clearing oil wells comprising a casing located within the well, and closed at the bottom, a conduit supported within the said casing, a burner connected with the lower extremity of said conduit, pipes arranged within the conduit and connected with the burner for supplying the same with a combustible mixture in fluid form, electrodes mounted on the burner and spaced to form a spark gap, and a suitable electrical circuit in which said electrodes are located.

In testimony whereof we affix our signatures.

WILLIAM A. J. KREAGER.
JOHN T. POWERS.