F. MÜLLER.

MAGAZINE MECHANISM.

APPLICATION FILED OCT. 23, 1917.

1,288,125.

Patented Dec. 17, 1918.

2 SHEETS—SHEET 1.

Fig. 1.

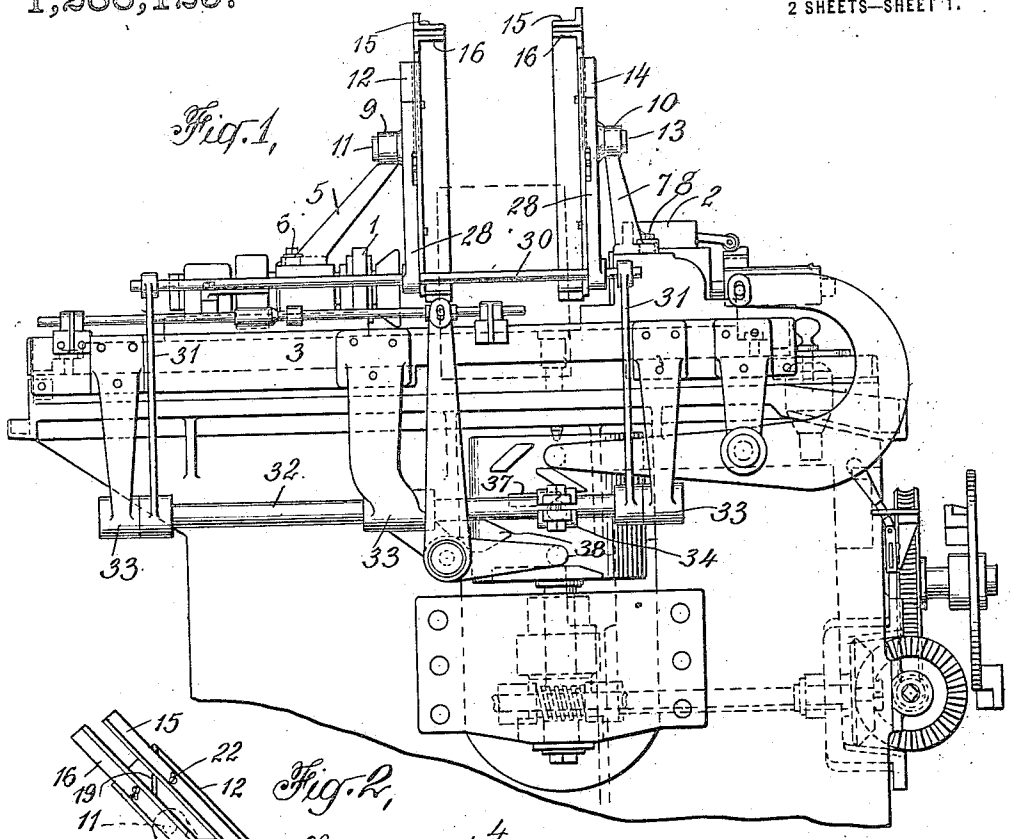

Fig. 2.

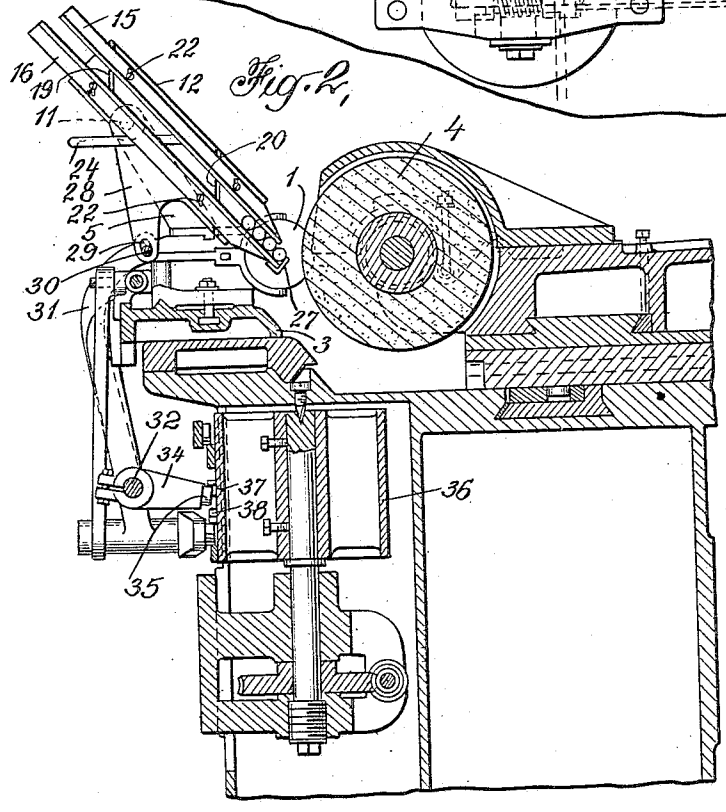

INVENTOR

Friederich Müller

BY S. Jay Teller

ATTORNEY

F. MÜLLER.

MAGAZINE MECHANISM.

APPLICATION FILED OCT. 23, 1917.

1,288,125.

Patented Dec. 17, 1918.

2 SHEETS—SHEET 2.

Fig. 3,

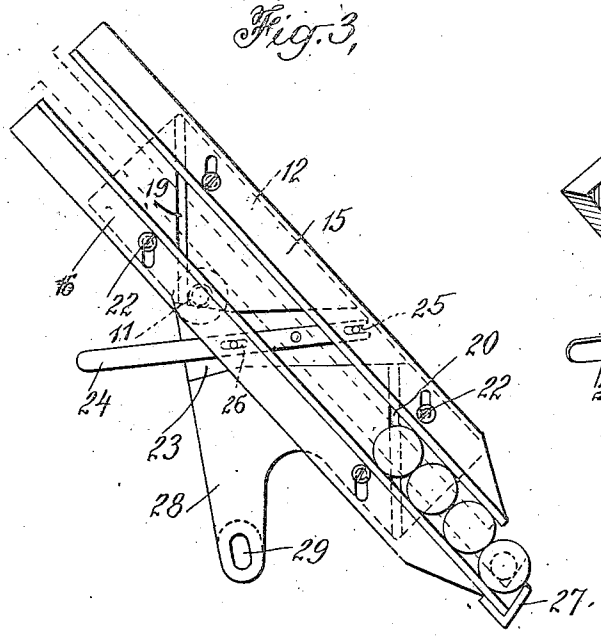

Fig. 4,

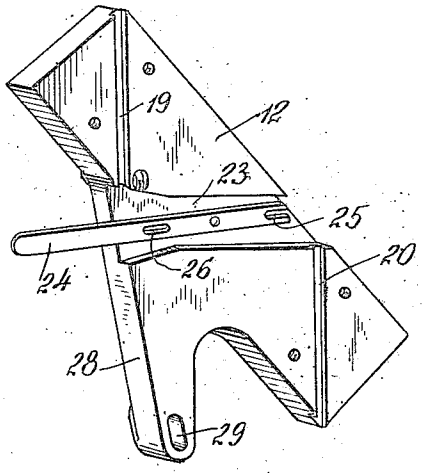

Fig. 5,

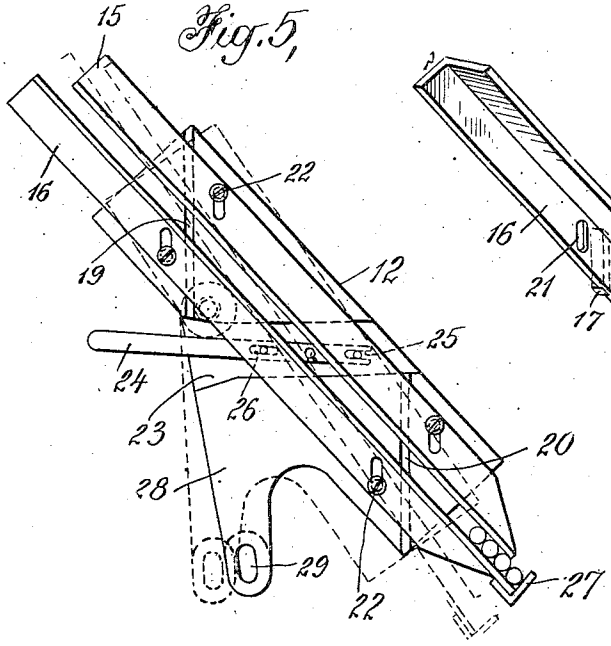

Fig. 6.

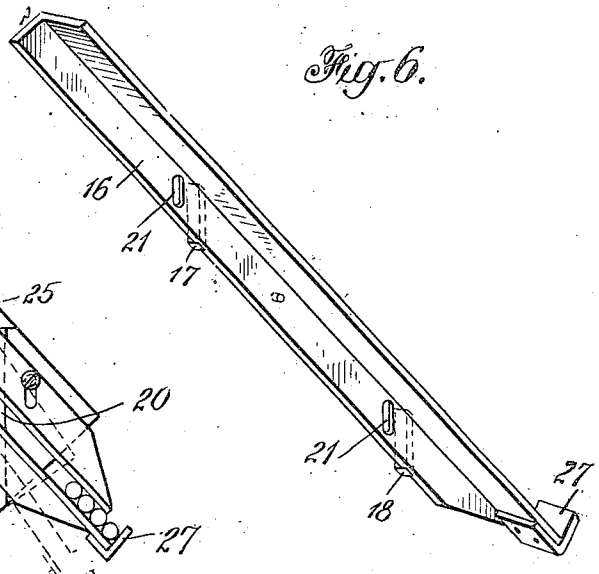

INVENTOR

Friedrich Müller

BY S. Jay Teller

ATTORNEY

UNITED STATES PATENT OFFICE.

FRIEDERICH MÜLLER, OF HARTFORD, CONNECTICUT, ASSIGNOR TO PRATT & WHITNEY COMPANY, OF NEW YORK, N. Y., A CORPORATION OF NEW JERSEY.

MAGAZINE MECHANISM.

1,288,125. Specification of Letters Patent. Patented Dec. 17, 1918.

Original application filed May 2, 1917, Serial No. 165,903. Divided and this application filed October 23, 1917. Serial No. 198,057.

To all whom it may concern:

Be it known that I, FRIEDERICH MÜLLER, a citizen of the United States, residing at Hartford, in the county of Hartford and State of Connecticut, have invented certain new and useful Improvements in Magazine Mechanism, of which the following is a specification.

The invention relates particularly to a magazine mechanism adapted for use in supplying blanks to metal working machines such as milling machines, lathes, grinding machines, etc. The mechanism as herein illustrated and described has features which particularly adapt it for use in connection with or as a part of a cylindrical grinding machine, but it will be understood that as concerns other features of the invention the mechanism is adapted to be used in connection with widely differing machines.

The object of the invention is to provide a magazine mechanism having various improved features whereby are attained simplicity of construction, reliability of operation, ease of adjustment and other important advantages which will be apparent from the following specification and claims.

This application constitutes a division of my copending application for automatic grinding machines, filed May 2nd, 1917, Serial No. 165,903.

Of the drawings which illustrate the preferred embodiment of the invention:

Figure 1 is a front view of a metal working machine provided with a magazine mechanism embodying the invention.

Fig. 2 is a fragmentary sectional view of the machine shown in Fig. 1.

Fig. 3 is a detail view showing a part of the magazine mechanism.

Fig. 4 is a view similar to Fig. 3 but showing the elements of the magazine mechanism differently adjusted.

Figs. 5 and 6 are detail views.

In Figs. 1 and 2 I have illustrated a grinding machine, this being the same as that set forth in my aforesaid application of which this case is a division. It will not be necessary to describe the entire machine in detail and it will be sufficient to point out that the machine comprises a headstock 1 and a tailstock 2 which are adjustably mounted on a table 3 carried by the main frame. The headstock and the tailstock are provided respectively with centers which are adapted to engage the ends of the blanks to be ground to support them during the grinding operation. The grinding wheel is shown at 4 and this is supported and controlled by suitable mechanism which need not be described in detail.

Secured to the main casting of the headstock 1 is a bracket 5. This is held by bolts 6 extending through slotted holes in the bracket. These slotted holes permit limited adjustment of the bracket longitudinally of the headstock, and after adjustment the bolts serve to secure the bracket in adjusted position. Secured to the main casting of the tailstock 2 is a bracket 7. This is held by bolts 8 extending through slotted holes in the bracket. These slotted holes permit limited adjustment of the bracket longitudinally of the tailstock, and after adjustment the bolts serve to secure the bracket in adjusted position. The two brackets 5 and 7 are provided respectively at 9 and 10 with bearings in alinement with each other.

Pivotally mounted upon the bracket 5 by means of a pivot pin at 11 extending into the bearing 9 is a magazine frame plate 12. Pivotally mounted upon the bracket 7 by means of a pivot pin at 13 extending into the bearing 10 is a magazine frame plate 14. The two plates 12 and 14 are similar to each other except that they are oppositely formed, and the mechanisms carried by the plates are similar except that they are oppositely formed. A detailed description of but one of the plates and of the mechanism carried thereby will be sufficient, the plate 12 and the corresponding mechanism being shown in detail in Figs. 3 to 6. Secured to the plate 12 are two relatively long guide bars 15 and 16 which taken together form one of the body parts of the magazine. These bars are preferably angle-shaped in cross section, having flanges which project outward and having webs which are connected to the plate 12. Preferably, as shown, the bars are adjustable with respect to the plate, each bar having two guide tongues 17 and 18 which are slidable respectively in guideways 19 and 20 formed in the plate. The tongues and the guideways are approximately ver-

tical and at an angle of approximately 45° to the bars 15 and 16. The web of each angle bar is provided with slotted apertures 21 parallel to the guide tongues 17 and 18, and screws 22 extending through these apertures and entering the plate serve to lock the bars in adjusted positions. Preferably I provide means whereby the bars can be adjusted simultaneously and uniformly with respect to a fixed center line. As shown, the plate 12 has a recess 23 in which is pivotally mounted a lever 24, the pivot of the lever being at the aforesaid fixed center line. The lever is provided with two slots 25 and 26 positioned at equal distances from the pivot and receiving pins carried respectively by the bars 15 and 16. It will be seen that by loosening the screws 22 the two bars 15 and 16 can be moved equal distances in opposite directions by means of the lever 24, the bars being guided by the tongues 17 and 18. After adjustment the screws 22 are tightened, thus locking the bars in adjusted positions.

It will be understood as aforesaid, that the plate 14 is provided with mechanism similar to that already described. The two opposite sets of bars 15 and 16 serve as guides for the ends of the blanks to be ground, and by adjusting the bars in the way described the mechanism can be adapted for blanks of different diameters. In fact, by differently adjusting the devices on the two plates the mechanism can be adapted for blanks having different diameters at the two ends.

At the lower end of each bar 16 there is provided a stop or lip 27 the upper surface of which is at an angle of approximately 90° to the bar 16. The stop serves to prevent the movement of the blanks by gravity out of the bottom of the magazine. By referring to Fig. 3 and observing the dot-and-dash lines thereof, it will be noted that the lip 27 is so positioned and that the guide tongues 15 and 16 are at such an angle (approximately 45°) that as the bars 15 and 16 are separated or moved toward each other the lip 27 is moved downward or upward exactly to the extent necessary to maintain the axis of the lowermost blank in fixed position, notwithstanding differences in the size thereof. It will be understood that Fig. 3 shows the magazine with the lowermost blank in alinement with the centers 5 and 6. Fig. 4 shows the mechanism adjusted for very small blanks.

Preferably, as shown, the stop 27 lies with its upper surface at an angle of a little less than 90° to the bar 16 in order that it may more effectively prevent the escape of blanks from the bottom of the magazine. When the upper surface of the stop is thus inclined, the tongues and guideways are arranged at an angle which is a little less than 45° in order to compensate for the angularity of the stop and maintain a fixed position for the axis of the lowermost blank notwithstanding adjustments for different sizes.

Each plate 12 and 14 is provided with a depending arm 28 having a slot 29 through which extends a horizontal rod 30. This rod 30 is carried by levers 31, 31 which are mounted upon a horizontal rock shaft 32. The rock shaft is mounted in bearings 33, 33 which are formed in brackets depending from the table 3.

Secured to the rock shaft 32 is an operating arm 34 provided at its end with a roller 35. The machine is provided with a rotatable cam drum 36 having a cam plate 37 adapted to engage the roller 35 and swing the arm 34 downward. For swinging the arm upward the drum is provided with a cam plate 38.

During normal grinding operation the magazine mechanism is positioned substantially as indicated by dotted lines in Fig. 5. The position shown by full lines in Fig. 5 and also shown in Fig. 2 is the position which it occupies when supplying a fresh blank to be ground. With the grinding mechanism in its normal operation the roller 35 is in its uppermost position. When a blank has been ground and has been discharged the roller 35 is engaged by the cam plate 37 and is forced downward, thus serving by means of the rock shaft 32, the rod 30 and the other parts described, to swing the magazine mechanism forward to the position shown in full lines in the drawings. In this position the lowermost blank in the magazine is in exact alinement with the centers which thereupon act to engage the blank. When the blank has been engaged by the centers the continued movement of the cam drum brings the cam plate 38 into engagement with the roller 35 whereupon the roller is moved upward, thus restoring the magazine mechanism to the normal position showed by dotted lines in Fig. 4. As the magazine is moved backward the lowermost blank which has been engaged by the centers is drawn out and the other blanks slide downward to bring another blank into position to be engaged upon the next movement of the magazine.

What I claim is:

1. In a magazine mechanism, the combination of two blank guiding bars, bar supporting means movable to carry the bars into and out of blank supplying position, and means for adjusting the bars toward and from each other relatively to the support and for maintaining them equidistant from a fixed center line during such adjustment.

2. In a magazine mechanism, the combination of two pairs of blank guiding bars, two

brackets respectively supporting the pairs of bars and movable to carry the bars into and out of blank supplying position, and independent means for adjusting the bars of each pair toward and from each other relatively to the support and for maintaining them equidistant from a fixed center line during such adjustment.

3. In a magazine mechanism, the combination of two blank guiding bars, bar supporting means movable to carry the bars into and out of blank supplying position, a stop at the lower end of the blank receiving space between the bars, and means for adjusting the bars toward and from each other relatively to the support and for moving the stop longitudinally of the blank receiving space, the said bars and the stop being all moved simultaneously and through equal distances.

4. In a magazine mechanism, the combination of two blank guiding bars, bar supporting means movable to carry the bars into and out of blank supplying position, a stop carried by one of the bars at its lower end, and means whereby the bars may be adjusted toward and from each other relatively to the support and whereby the bar carrying the stop may be moved longitudinally.

5. In a magazine mechanism, the combination of two blank guiding bars, bar supporting means movable to carry the bars into and out of blank supplying position, a stop carried by one of the bars at its lower end, means whereby the bars may be adjusted toward and from each other relatively to the support and whereby the bar carrying the stop may be moved longitudinally, and means for equalizing the movement of each bar toward the other and the longitudinal movement of the stop carrying bar.

6. In a magazine mechanism, the combination of two blank guiding bars, bar supporting means movable to carry the bars into and out of blank supplying position, a stop carried by one of the bars at its lower end, and means for adjusting the bars toward and from each other relatively to the support at angles of approximately 45° with respect to a fixed center line and for maintaining them equidistant from the said fixed center line during such adjustment.

7. In a magazine mechanism, the combination of two blank guiding bars, bar supporting means movable to carry the bars into and out of blank supplying position, the bars being adjustable toward and from each other relatively to the support, and a lever pivoted to the support and engaging the bars to maintain them equidistant from a fixed center line during adjustment.

8. In a magazine mechanism, the combination of two blank guiding bars, bar supporting means movable to carry the bars into and out of blank supplying position, the bars being adjustable toward and from each other relatively to the support at angles of approximately 45° to a fixed center line, a stop carried by one of the bars at its lower end, and a lever pivoted to the support and engaging the bars to maintain them equidistant from said fixed center line during adjustment.

9. In a magazine mechanism, the combination of two blank guiding bars, a movable supporting plate having a recess, two blank guiding bars carried by the plate and movable therewith into and out of blank supplying position, the bars slidably engaging the plate and being adjustable toward and from each other, and a lever pivoted to the support within the recess and engaging the bars to maintain them equidistant from a fixed center line during adjustment.

10. In a magazine mechanism, the combination of two blank guiding bars having guiding tongues formed thereon, a supporting plate having grooves for receiving the tongues to guide the bars for adjustment toward and from each other, the plate being movable to carry the bars into and out of blank supplying position, and means for maintaining the bars equidistant from a fixed center line during adjustment.

11. In a magazine mechanism, the combination of two pairs of oppositely disposed blank guiding bars, two oppositely disposed plates respectively supporting the said pairs of bars, means for pivotally supporting the plates for movement about a common axis to carry the bars into and out of blank supplying position, slotted arms projecting from the plates, and an actuating rod for the plates extending through the slots and supported independently of the arms for oscillating movement about an axis parallel to the pivotal axis of the plates.

In testimony whereof, I hereto affix my signature.

FRIEDERICH MÜLLER.