Dec. 4, 1956 R. J. CASSIDY 2,773,217

FLUORESCENT LAMP SYSTEM

Filed Jan. 29, 1952

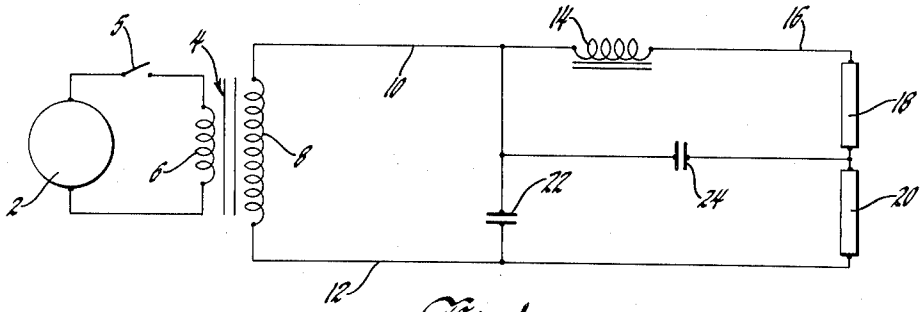

Fig. 1

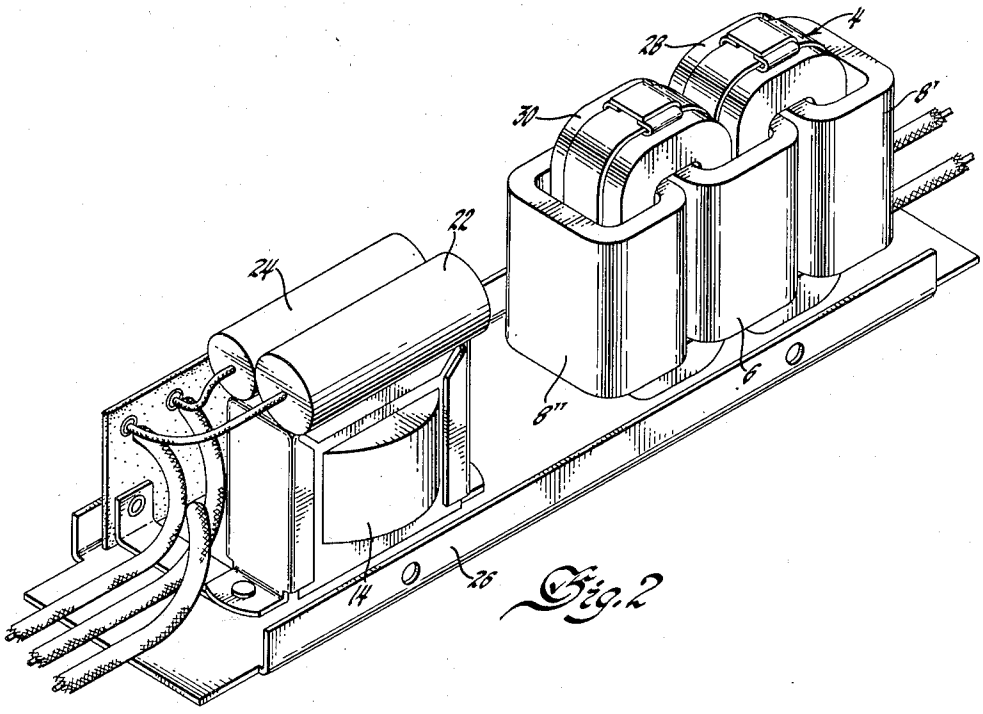

Fig. 2

INVENTOR.
Robert J. Cassidy
BY
Willis, Helwig & Baillio
ATTORNEYS

United States Patent Office 2,773,217 Patented Dec. 4, 1956

2,773,217

FLUORESCENT LAMP SYSTEM

Robert J. Cassidy, Mansfield, Ohio, assignor to General Motors Corporation, Detroit, Mich., a corporation of Delaware

Application January 29, 1952, Serial No. 268,841

3 Claims. (Cl. 315—188)

This invention relates to power supply systems and more particularly to ballast systems for illuminating means such as fluorescent lamps. While ballast systems for fluorescent lamps are commercially available, they are designed to operate on a prescribed voltage and at a predetermined frequency which is substantially constant, such, for example, as that in the commercial power supply lines. If, however, it is desired to operate fluorescent tube lamps at some location where conventional power means are not available, then sources in which voltage and frequency may vary are encountered. One such instance is in the illumination of busses where both the voltage supplied by the generator or alternator of the bus and the frequency thereof vary over substantially wide limits.

One of my objects in this invention is to provide a power supply ballast system for fluorescent lighting means that will operate over a wide range of frequencies.

A further object in this invention is to provide a ballast system for fluorescent lighting means that will operate to start and maintain the lighting system over a varying voltage and frequency from a source of energy.

A still further object in this invention is to provide a power supply ballast system for fluorescent lighting means which will produce a substantially constant amount of illumination over a broad band of frequencies from a source.

It is a still further object in this invention to provide a power supply ballast system for fluorescent lighting means which will control a plurality of lamps from a single ballast unit.

With these and other objects in view which will become apparent as the specification proceeds, my invention will be best understood by reference to the following specification and claims and the illustrations in the accompanying drawings, in which:

Figure 1 is a circuit diagram of the electrical system embodying my invention; and

Figure 2 is a perspective view of the ballast unit assembly showing the various elements forming the system.

A fluorescent tube lamp, since it is a gas vapor type, requires a relatively high voltage to cause initial energization or breakdown, but once conductivity therethrough has been established and the vapor ionized, the internal resistance drops to a much lower value and a smaller voltage is required to maintain the arc and the lamp energized. Thus a high starting voltage must be provided and only a much lower sustaining voltage is required to maintain operation. As exemplary of a source of power which varies widely in frequency, there may be cited the case of a motor bus or highway vehicle. In this instance, a small alternating current generator is used to supply power for various devices on the bus. The generator is driven by the vehicle engine, and, as a result, the frequency of the supply has been found to vary between 50 and 450 cycles from idle to normal high speed operation. This is a relatively broad band of frequencies and in this portion of the spectrum represents a ratio change of 9:1. Reactances, of course, vary with changes in frequency and, therefore, some means must be provided to counteract such changes to provide an operative system over such a range.

Referring now more specifically to Figure 1, there is shown at 2 a source of alternating current which may be an alternator driven by the vehicle motor and whose frequency will vary in normal bus operation. A transformer 4 has its primary 6 directly connected across the alternator, a switch 5 controlling the energization thereof. A secondary 8 has one terminal connected to a conductive line 10 and the opposite terminal connected to a similar conductive line 12. Line 10 is also connected to one terminal of a choke or inductance coil 14, the opposite terminal of the latter being connected through line 16 to one terminal of a fluorescent lighting tube 18. A second similar tube 20 is connected in series with the first and has its opposite terminal connected to line 12. A condenser 22 is connected directly across the secondary 8 and a condenser 24 is connected between the junction of the tubes 18 and 20 and line 10.

Assuming that an alternating voltage of low frequency is applied to the primary 6 by the alternator 2, such as when the engine is idling, as the secondary voltage builds up during the first half cycle at start, the division of the voltage across the two lamps 18 and 20 is controlled by the condenser 24 so that most of the voltage is applied at this time across lamp 20. When this voltage reaches the breakdown voltage for the internal resistance of the lamp, the same is ionized and the lamp will start and also the internal resistance will immediately drop to a much lower value. This changes the voltage division and transfers the higher voltage to lamp 18. When the total secondary voltage rises sufficiently to impress the necessary striking or breakdown voltage to lamp 18 and at the same time maintain the first lamp 20 energized, the second lamp 18 will conduct and light. The internal resistance of this lamp will, of course, drop and the two lamps will then be directly in series across the secondary. It will be noted that at this time the inductance or choke coil 14 is likewise in this series circuit and this limits any transient currents introduced into the circuit by a sudden change in resistance of the lamp 18. High current densities at the lamp electrodes are thus avoided, which increases lamp life. It will thus be seen that by using a single ballast unit consisting of inductance 14 and condenser 24 in combination with the source and tubes, a system for igniting and energizing two tubes from one ballast unit is provided. The transformer 4 has been designed with high leakage and poor regulation so that the final total lamp current will be between a maximum safe value and a minimum maintaining one.

If the frequency of the alternator is higher than that assumed previously, then the starting action is easier due to the fact that the reactance drop across the condenser 24 is lower at higher frequencies and more of the available secondary voltage is therefore applied to lamp 20. However, as the frequency of the supply is increased, the leakage reactance and the effective resistance of the transformer increases, tending to lower the net output voltage available at the lamp load. In order to compensate for this loss in net output, there is therefore provided an additional condenser 22 which acts with the other inductance and capacitative elements in the circuit to produce a resonant effect, and thus tend to raise the available output. This resonant circuit includes condenser 24, the inductance of the transformer, and inductance 14, as well as condenser 22. Since different types of fluorescent tube lamps have different resistances and require different voltages, specific values of the components of the system may be varied to suit

the particular elements used. As exemplary of values which have been found satisfactory in supplying commercial flourescent lighting tubes from an alternator varying in frequency from 50 to 400 cycles are the following:

Inductance **14**	.5 henries.
Condenser **22**	.1 mfd.
Condenser **24**	.05 mfd.

The actual physical unit used in the present system is shown in Figure 2, in which a base **26** is provided. Mounted on one end of the base is the transformer **4**, which is formed of two closed core sections **28** and **30**. The primary **6** is wound around one leg of each core section and secondary **8** is split into two sections **8'** and **8''** connected together in series, though it is shown as a single coil in Figure 1. With this construction it will be seen that there is high leakage and poor regulation. Likewise, since it is necessary that the transformer be operated at very high flux densities so that it will saturate at voltage peaks to give satisfactory operation at different frequencies, it will develop a considerable amount of heat, and this construction provides for high radiation. The choke coil **14** is mounted on the other end of the base **26**. The condensers **22** and **24** are mounted on top of the choke coil and are considerably spaced from the transformer to keep them away from the excess heat.

It will thus be evident from the above that I have provided a single, compact ballast unit capable of operating a plurality of fluorescent tube lighting means which is effective over a wide band of frequencies from a source.

I claim:

1. In a control circuit for gas-filled lighting tubes, a source of variable frequency A. C. power whose higher frequencies are several times the lower ones and which varies over the range during normal operation, a transformer having a primary and a secondary winding, said primary winding being connected to the source of power and the secondary winding connected to the tubes, and a condenser connected across the secondary winding whose value is selected to provide a resonant condition at a predetermined frequency toward the upper end of the frequency range to give a more uniform output from the source and to increase the output to the tubes at the higher frequencies.

2. In a control circuit for gas-filled lighting tubes, a source of variable frequency A. C. power whose frequency varies during operation at least over a two to one ratio, a transformer having a primary and a secondary winding and a low coefficient of magnetic coupling between the two, said primary being connected to the power source and the secondary to the tubes and capacitative reactance means connected across the secondary whose value is selected to provide a resonant circuit with the inductance in the system at higher frequencies of supply as the leakage loss of the transformer increases to tend to counteract said loss.

3. In a control circuit for a plurality of gas-filled lighting tubes, a source of variable frequency A. C. power, whose frequency varies during operation at least over a two to one ratio, a transformer having a primary and a secondary winding having a low coefficient of magnetic coupling between the two, said primary winding being connected to the source of power, an inductance coil, conductive means connecting the inductance coil and two tubes in series relation across the transformer secondary, a condenser connected from the junction of the two tubes to one side of the secondary winding and a second condenser connected across the secondary whose value is selected to provide a resonance effect with the inductance in the circuit in the higher frequency range providing a more uniform output of the system over the operating spectrum to provide starting voltage and supply a substantial uniform power to the tubes as the frequency of the source varies.

References Cited in the file of this patent

UNITED STATES PATENTS

1,936,005	Bay	Nov. 21, 1933
2,025,471	Osborne	Dec. 24, 1935
2,086,668	Fodor	July 13, 1937
2,268,512	McCarthy	Dec. 30, 1941
2,363,868	Karash	Nov. 28, 1944
2,373,402	Lecorguillier	Apr. 10, 1945
2,487,092	Bird	Nov. 8, 1949