US 20020084587A1

(19) United States

(12) Patent Application Publication (10) Pub. No.: US 2002/0084587 A1

Bennett et al. (43) Pub. Date: Jul. 4, 2002

(54) CONVERTIBLE GAMING TABLE

(76) Inventors: **Thomas D. Bennett**, Biloxi, MS (US); **James J. Richardelle**, Long Beach, MS (US)

Correspondence Address:
Venable Baetjer Howard & Civiletti LLP
1201 New York Avenue NW Suite 1000
Washington, DC 20005-3917 (US)

(*) Notice: This is a publication of a continued prosecution application (CPA) filed under 37 CFR 1.53(d).

(21) Appl. No.: **09/489,961**

(22) Filed: **Jan. 24, 2000**

Publication Classification

(51) **Int. Cl.**[7] **A63F 3/00**; A63F 9/00

(52) **U.S. Cl.** **273/309**; 273/274; 273/236

(57) ABSTRACT

A convertible gaming table includes, a table base that is adapted for play of a first casino game, a removable game table covering formed to fit the table base, and means for retaining the game table covering on the table base. The game table covering covers the first casino game and adapts the table base for play of a second casino game. Play of the first and second casino games can, thereby, be controlled by a single casino employee.

The convertible gaming table is adaptable for use on traditional, unmonitored game tables as well as those in which a system for monitoring wagers, card play, and payoffs are incorporated. Accordingly, such convertible gaming tables optionally include monitoring devices and software running such devices to monitor the wagers of a plurality of players playing the first casino game, as well as those playing the second casino game. The convertible gaming table optionally includes monitoring devices and software running such devices for monitoring jackpots won by the plurality of players playing the first casino game, as well as those playing the second casino game. Another option of the convertible gaming table according to the present invention is a system for awarding a selected one of the plurality of players playing the first and second casino games a bonus.

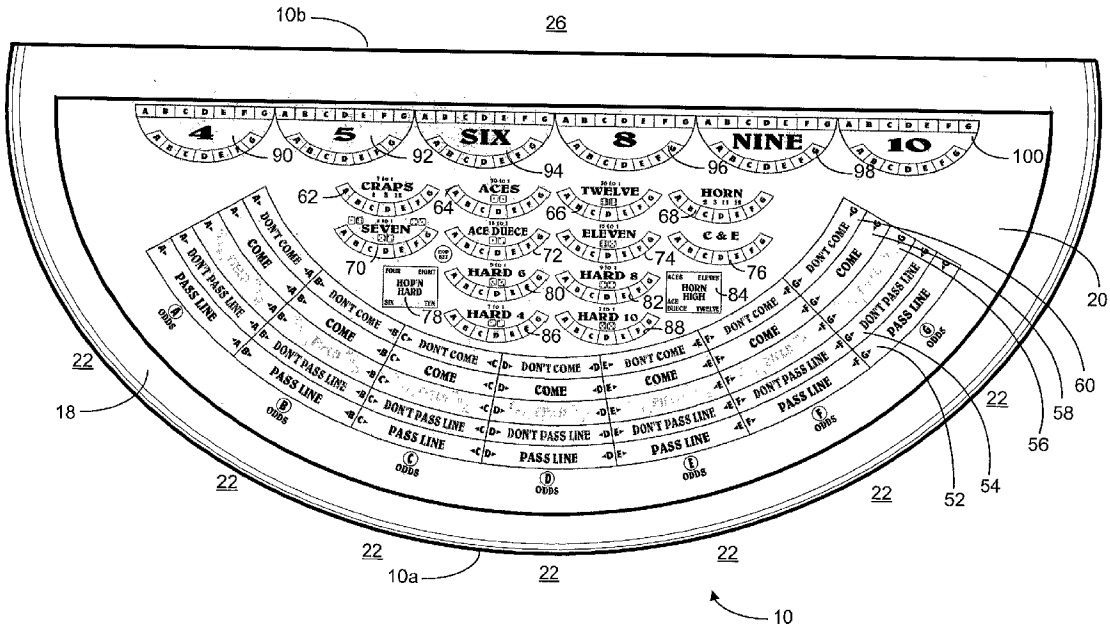

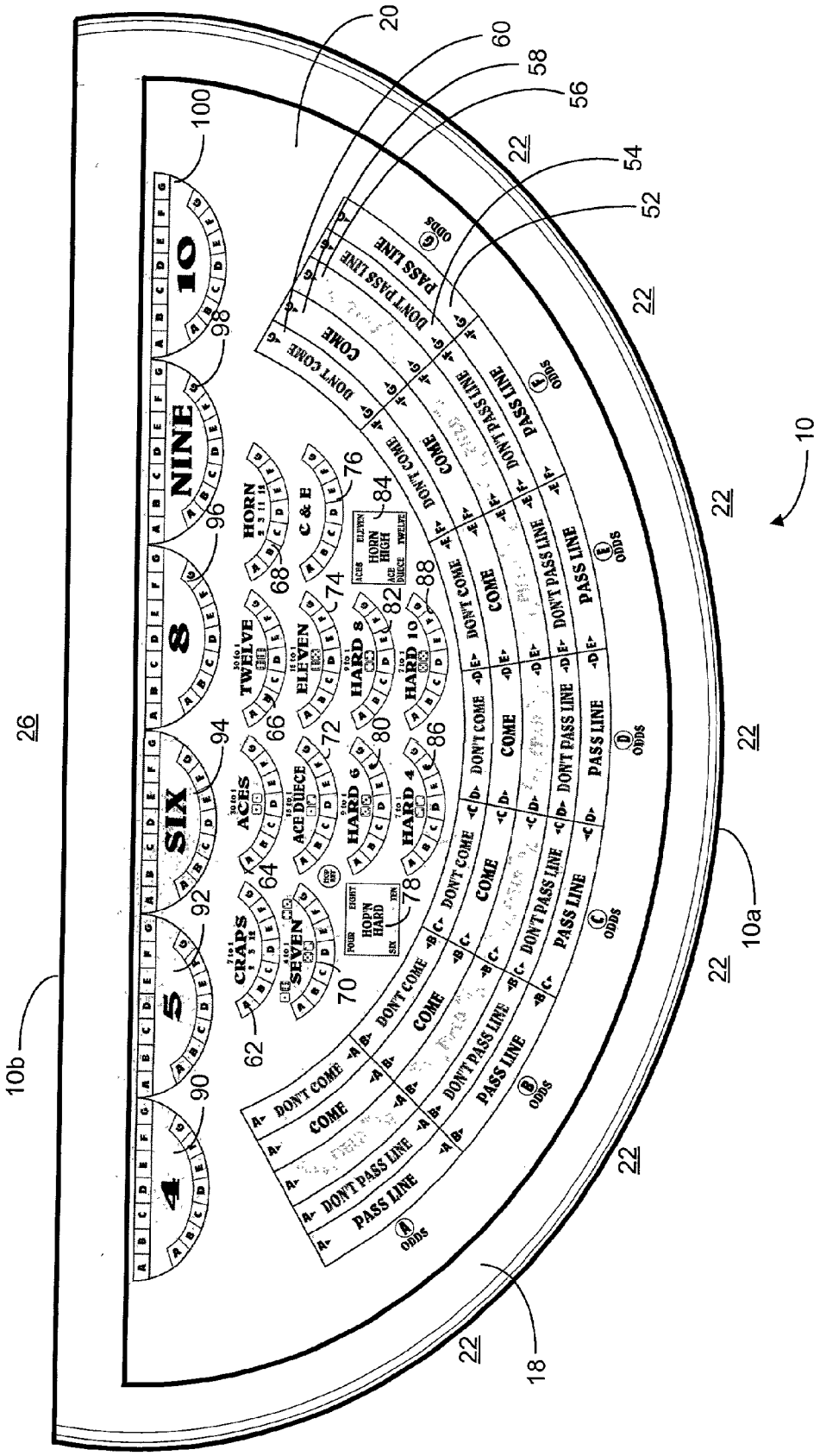
20
60
58
56
54
52
22
10
10a
10b
18
26
100
98
96
94
92
90
4
5
SIX
8
NINE
10
CRAPS
SEVEN
ACES
ACE DUECE
TWELVE
ELEVEN
HORN
C & E
HARD 6
HARD 4
HARD 8
HARD 10
HOP'N HARD
HORN HIGH
DON'T COME
COME
DON'T PASS LINE
PASS LINE
ODDS
62
64
66
68
70
72
74
76
78
80
82
84
86
88

Fig. 1

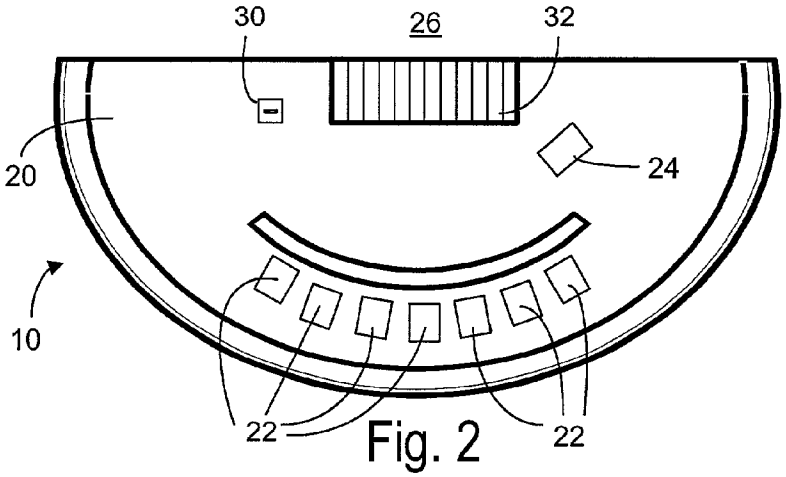

Fig. 2
PRIOR ART

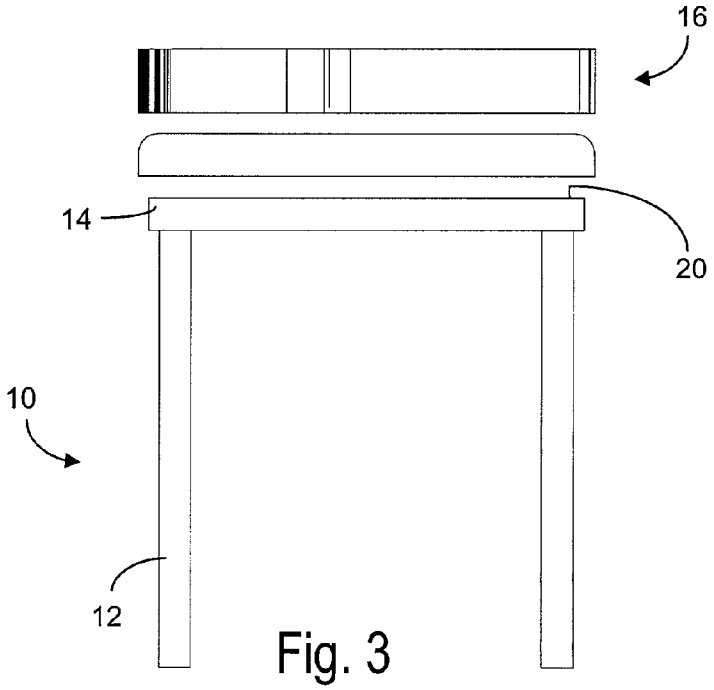

Fig. 3

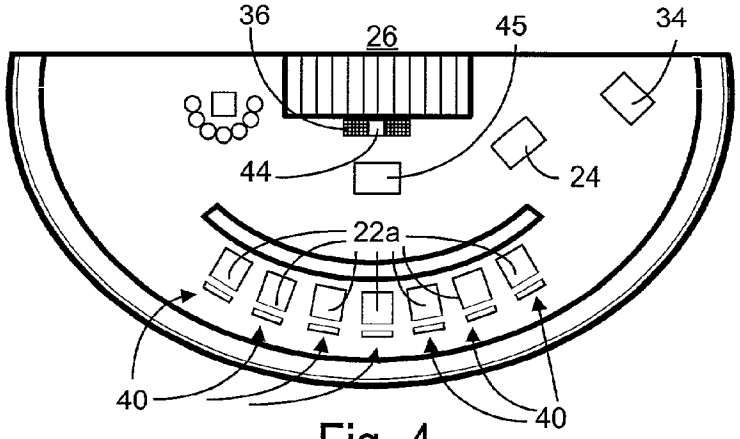

Fig. 4
PRIOR ART

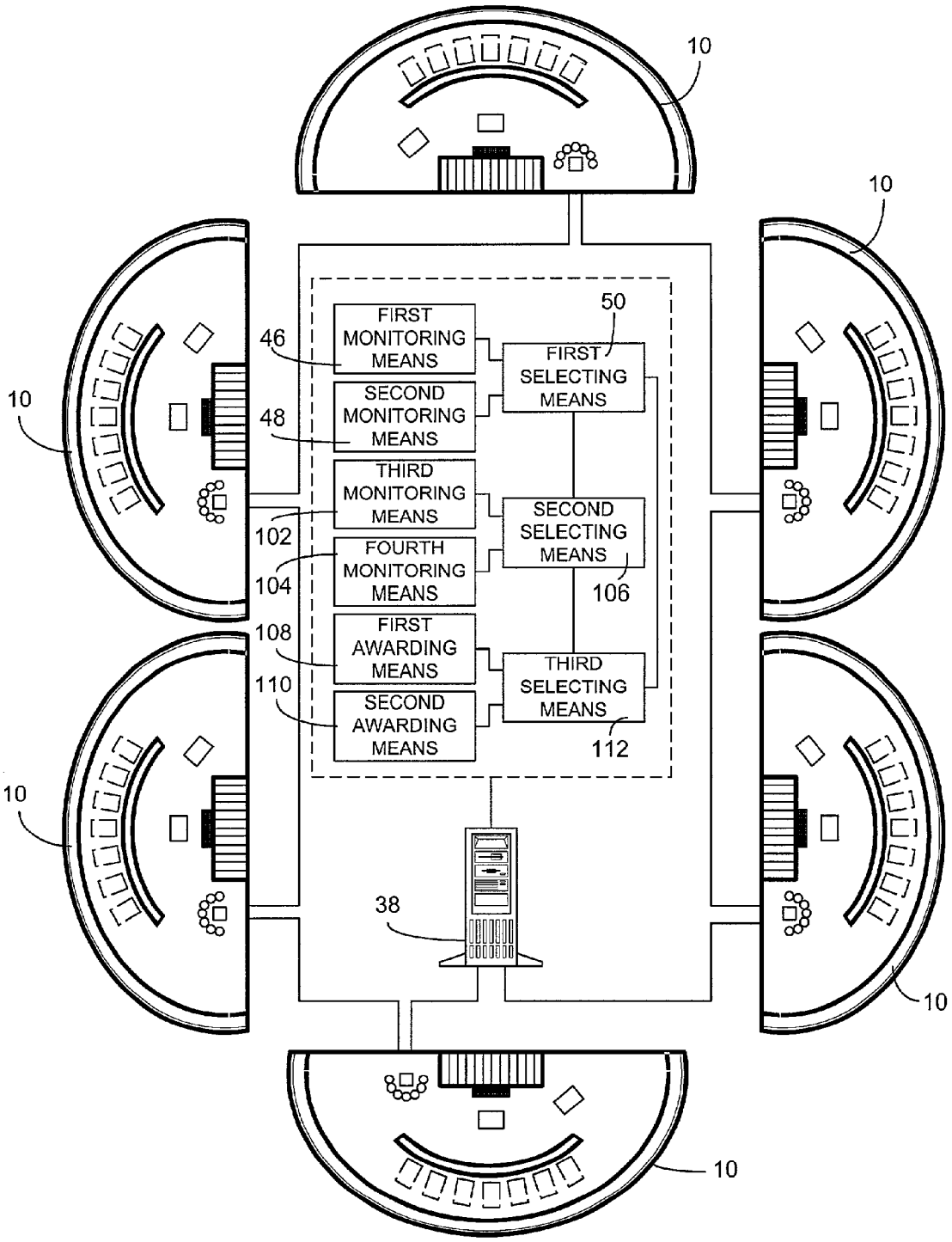
10
10
10
10
10
10
50
46
48
102
104
106
108
110
112
38
FIRST MONITORING MEANS
SECOND MONITORING MEANS
THIRD MONITORING MEANS
FOURTH MONITORING MEANS
FIRST AWARDING MEANS
SECOND AWARDING MEANS
FIRST SELECTING MEANS
SECOND SELECTING MEANS
THIRD SELECTING MEANS

Fig. 5

CONVERTIBLE GAMING TABLE

CROSS-REFERENCE TO RELATED APPLICATIONS

[0001] This patent application is related to U.S. Serial No. 29/108,484, for a "Gaming Table Covering", and U.S. Serial No. 29/108,485, for a "Gaming Table Covering", both of which are commonly assigned to the assignee of the present invention, and incorporated herein by reference.

BACKGROUND OF THE INVENTION

[0002] 1. Field of the Invention

[0003] The present invention relates generally to casino games, and more particularly to methods and apparatus for converting one casino table game into another.

[0004] 2. Statement of the Prior Art

[0005] The legal gaming industry has enjoyed extraordinary growth both in the United States and abroad. It has been estimated, for example, that from 1982 to 1996 the domestic gaming industry experienced a compound annual growth rate of 11.2%, to $47.6 billion in revenues. Moreover, the percentage of households from which someone visited a casino to gamble increased from 17% in 1990 to 32% in 1996, representing over 36 million households and 176 million visits, according to Harrah's 1997 Survey of Casino Entertainment.

[0006] This increase in gaming demand results in part from the greater public acceptance of legal casino gaming. For example, research conducted by Yankelovich Partners, Inc. in 1996 found that 92% of U.S. adults view casino gambling as an acceptable form of entertainment for themselves and others. This acceptance is reflected not only by the dramatic number of domestic jurisdictions in which casino gaming under one form or the other is now permitted, but also by the many foreign jurisdictions which have either legalized casino gaming or expanded it in scope in the recent past. Significant foreign gaming jurisdictions now include Canada, Australia, New Zealand, France, The Netherlands, and various South American, Asian and Eastern European nations.

[0007] The growth of legal gaming has at the same time resulted in a huge increase in the number of gaming machines, among them a host of video poker and other games as well as more traditional slot machines. Gaming machines are now by far the most popular form of gambling. At the major Nevada and New Jersey casinos, for example, they account for approximately two-thirds of total gaming revenues. Such gaming machines, along with traditional casino table games (e.g., Craps or Blackjack), can be more accurately controlled with the help of technologically innovative products and systems.

[0008] Accordingly, a principal object of the present invention is to provide unique improvements to existing casino table games that will instill further growth in the legal gaming industry.

[0009] When most people are asked to name the most prototypical casino game, one expert says the game of Craps ranks high on the list. Few casino games can match this casino staple in terms of action and excitement. Unfortunately, with its large table and crew of four, its busy layout, and the number of betting options to choose from, Craps as played in its traditional form can be demanding. It is demanding, first, to players because it is considered by many to be one of the most intimidating games. Second, it is demanding to casinos because it is a costly game. It takes up large amounts of casino floor space and is employee-intensive, requiring a "boxman", a "stickman", and two dealers. When the game's popularity flags enough for a crew to nearly outnumber the players, particularly late at night, casinos have been known to shut down Craps tables in favor of other traditional casino table games which require fewer employees.

[0010] Accordingly, it is another principal object of the present invention to provide methods and apparatus for converting one casino table game into another while, at the same time, minimizing the number of employees required to staff such tables.

SUMMARY OF THE INVENTION

[0011] A convertible gaming table according to the present invention generally comprises a table base that is adapted for play of a first casino game, a removable game table covering formed to fit the table base, and means for retaining the game table covering on the table base. The game table covering covers the first casino game and adapts the table base for play of a second casino game. Play of the first casino game and the second casino game is thereby controlled by a single casino employee.

[0012] In accordance with a presently preferred embodiment of the invention, the first casino game comprises Blackjack and the second casino game comprises Craps. The retaining means, therefore, preferably comprises a rail that encompasses an upper surface of the table base. Such rail must also be adapted to keep a roll of dice upon the upper surface.

[0013] Conveniently, the convertible gaming table according to the present invention is adaptable for use on traditional, unmonitored game tables as well as those in which a system for monitoring wagers, card play, and payoffs are incorporated. The convertible gaming table, accordingly, may optionally comprise a first means for monitoring wagers of a plurality of players playing the first casino game, a second means for monitoring wagers of the plurality of players playing the second casino game, and a first means for selecting operation of the first monitoring means and the second monitoring means. The first selecting means is, in a presently preferred embodiment, mounted to the table base.

[0014] Such first selecting means is, according to one important aspect of the present invention, adapted to select either of the first monitoring means or the second monitoring means. As an alternative, it may be adapted to select both of the first monitoring means or the second monitoring means. A multi-option selecting means is, likewise, within the scope of the present invention, wherein such first selecting means is adapted to select either of the first monitoring means or the second monitoring means, both of the first monitoring means or the second monitoring means, and neither of the first monitoring means or the second monitoring means. This multi-option selecting means may conveniently be provided through the use of suitable software control.

[0015] In accordance with another important aspect of the present invention, the convertible gaming table may option-

ally comprise a third means for monitoring jackpots won by the plurality of players playing the first casino game, and a fourth means for monitoring jackpots won by the plurality of players playing the second casino game. A second means for selecting operation of the third monitoring means and the fourth monitoring means, similar in nature to the first selecting means, may also be provided. That is, the convertible gaming table according to present invention is adaptable to select either of the third monitoring means or the fourth monitoring means. It can, likewise, be adapted to select both of the third monitoring means or the fourth monitoring means. Alternatively, it can be a multi-option selecting means that is adapted to select either of the third monitoring means or the fourth monitoring means, both of the third monitoring means or the fourth monitoring means, and neither of the third monitoring means or the fourth monitoring means. In a manner similar to the first selecting means, this multi-option second selecting means may suitably be accomplished through the use of software control.

[0016] In accordance with still another important aspect of the present invention, the convertible gaming table may optionally comprise a means for awarding a selected one of the plurality of players playing the first casino game a bonus. It may, likewise, further comprise a means for awarding a selected one of the plurality of players playing the second casino game a bonus. As a further alternative, it may comprise both a first means for awarding a selected one of the plurality of players playing the first casino game a bonus, and a second means for awarding a selected one of the plurality of players playing the second casino game a bonus. The bonus may suitably comprise a progressive jackpot.

[0017] In accordance with yet another important aspect of the present invention, the convertible gaming table may optionally comprise a third means for selecting operation of the first awarding means and the second awarding means. Such third selecting means may be adapted to select either of the first awarding means and the second awarding means. It may also be adapted to select both of the first awarding means and the second awarding means. Alternatively, it may be adapted to select either of the first awarding means and the second awarding means, both of the first awarding means and the second awarding means, and neither of the first awarding means and the second awarding means. As with the first and second selecting means, this multi-option third selecting means may conveniently be provided through the use of suitable software control.

[0018] With the convertible gaming table as described herein above, unique improvements are made possible for existing casino table games that will instill further growth in the legal gaming industry. Methods and apparatus for converting one casino table game into another are likewise disclosed which will, at the same time, minimize the number of employees required to staff such tables.

[0019] The above and other objects, advantages, and novel features according to the present invention will become more apparent from the following detailed description thereof, when considered in conjunction with the accompanying drawings wherein:

BRIEF DESCRIPTION OF THE DRAWINGS

[0020] **FIG. 1** illustrates a top plan view of the convertible gaming table according to the present invention;

[0021] **FIG. 2** is a top plan view of one known casino table game with which the present invention may be used;

[0022] **FIG. 3** is an exploded side view of the convertible gaming table according to the present invention;

[0023] **FIG. 4** is a top plan view of another known casino table game with which the present invention may be used; and

[0024] **FIG. 5** schematically illustrates a system of known casino table games with which the present invention may be used.

DETAILED DESCRIPTION OF THE INVENTION

[0025] Referring now to the drawings, wherein like or corresponding parts are designated by the same or similar reference number throughout the several views, there is shown in **FIG. 1 a** top plan view of the convertible gaming table **10** according to the present invention. While the particular design of the game table covering shown in **FIG. 1** is the subject of a co-pending, commonly assigned design patent application, U.S. Serial No. 29/108,484, it should be noted that any other game table covering (e.g., the game table covering shown in co-pending, commonly assigned design patent application, U.S. Serial No. 29/108,485) having a particular ornamental appearance will fall within the scope of the present invention as long as it incorporates the functional aspects described herein below.

[0026] The convertible gaming table **10** generally comprises a table base **12** (**FIG. 3**) that is adapted for play of a first casino game, a removable game table covering **14** formed to fit the table base **12**, and means **16** for retaining the game table covering **14** on the table base **16**. In such a manner, the game table covering **14** covers the first casino game and adapts table base **12** for play of a second casino game. Play of the first casino game and the second casino game can, thereby, be controlled by a single casino employee.

[0027] In accordance with a presently preferred embodiment of the invention, the first casino game comprises Blackjack and the second casino game comprises Craps. Retaining means **16**, therefore, preferably comprises a continuous rail **18** encompassing an upper surface **20** of the table base **12**. Such rail **18**, as is readily apparent, must be high enough above the upper surface **20** to keep a roll of dice upon such upper surface **20**.

[0028] Convertible gaming table **10** is conveniently adaptable for use on traditional, unmonitored game tables as well as those in which systems for monitoring wagers, card play, and payoffs are incorporated. Such monitored tables which are known in the prior art are those manufactured, for example, by Acres Gaming, Inc. of Corvallis, Oregon, Mikohn Gaming Corporation of Las Vegas, Nev., and Progressive Games, Inc. of Ft. Lauderdale, Fla.

[0029] Before its conversion, therefore, the convertible gaming table **10** may as shown in **FIG. 2** generally comprise a plurality of player positions **22** for play of a first, playing card-based casino game, for example, Blackjack. Blackjack in casinos is played with from one to eight fifty-two card decks dealt from a shoe **24** at the left of a dealer's position **26**. After each game has been played, the used cards are

typically disposed. All face cards are worth ten. Aces are worth either one or eleven points. However, if counting the ace as eleven would put the hand over twenty-one, it is automatically counted as one instead. All other cards are worth their face value. While the particular suits of a player's cards are most often irrelevant, the simplest way to get exactly twenty-one is to hold an ace and either a face card or a ten.

[0030] Each player antes up. The dealer deals one card face down to each player and himself or herself in rotation, followed by one card face up. Each player then looks at the cards dealt to him or her, and places a wager in addition to his or her ante. If the dealer's own two cards are a so-called natural, that is, an ace and a picture or ten, he turns them over and each player pays double the amount wagered, except that the holder of another natural pays only the original bet. Should some other player draw a natural when the dealer does not, the latter pays double.

[0031] If no natural shows up after two cards have been dealt, the dealer works to each player, one at a time in rotation, dealing the cards singly until the player calls a halt. Should the player's total count exceed twenty-one he or she immediately loses. If he or she stops at or under twenty-one, the dealer turns to the next player and proceeds as described. When all the players have been dealt to, the dealer turns up his or her face down card and draws until he or she goes over twenty-one or decides to stand. If the dealer makes twenty-one, he or she collects from all players. If over, the dealer must pay all those players who stood. If the dealer stands with less, he or she collects from those with lower counts and pays those still in the game with higher counts.

[0032] Players may take "splits" at their option. That is, if their first two cards are a pair, they may request that each be dealt to as a separate hand and wagered on as such. Bonuses may be played, with players receiving, for example, double their bets for hitting or staying under twenty-one on five cards, four times their bets for doing so on six cards, and double again for each additional card. Making twenty-one with three sevens may also collect double. Rules often vary, but are established by the so-called "house rules".

[0033] Most common house rules are set forth in an arc-shaped area **28** on the upper surface **22** of the table base **12**. Money wagered by the players is deposited by the dealer in a slot **30** in exchange for chips of varying denominations kept in a chip well **32**.

[0034] If a player and the dealer tie, however, the hand is considered a "push" and no money will be exchanged. Players have other wagering options. For example, after "doubling" or "doubling down", a player is dealt exactly one more card, up or down, and then his or her turn ends. The player's bet, of course, is doubled. When using this option, a player is betting more money that he or she will get a good score with just one more card added to his or her starting two. A player may also take "Insurance" whenever the dealer's up-card is an ace. If the player believes that the dealer's down-card is a ten-ranking card, then the player is permitted to place a side bet, typically of up to half his or her original wager as insurance. If the dealer does have a ten-ranking card, the player is immediately paid 2-to-1 on the insurance bet, but the original wager is lost unless the player too has Blackjack and tie the dealer. Here, the player is not insuring anything, but simply betting that the dealer's unseen card is a ten-ranking card. If the dealer does not have a natural twenty-one, the rest of the hand is played out as usual and a player taking Insurance will lose his or her insurance money.

[0035] If, on the other hand, table base **12** comprises a gaming table of the monitored type as noted above, the convertible gaming table **10** according to another embodiment of the present invention will (before its conversion) be as shown in **FIG. 4**. Conventional monitoring of a Blackjack game (e.g., with a SafeJack™ system distributed by Mikohn Gaming Corporation) works as follows. All chips used with such monitored gaming tables are of the "SafeChipTM" variety, and are manufactured by Bourgogne & Grasset, a French manufacturer of casino chips. Each SafeChip™ includes a HITAG™ tag which is encrypted and encoded with the chip's denomination and a unique code. In such a manner, the HITAG™ tag adapts the chip to transmit its authenticity and value. It can also provide exact player handle, interfaces to existing casino management systems, and covers most casino table games, such as Baccarat, Big Six, Caribbean Stud™, Let It Ride™, Pai Gow, Roulette, Spanish **21**™, Casino War™, and others.

[0036] When a player positions his or her chips in a corresponding bet area **22***a*, the SafeChips are recognized and the value of the player's stake stored. More than one SafeChip can be identified and read simultaneously, even if they are piled up on top of one another inside the bet area **22***a*. In addition, the shoe **24** identifies and records each card and where dealt. Every game is, accordingly, completely accountable and traceable.

[0037] There are several advantages with such monitored gaming tables. Resistance to forgery and fraud, as well as capture of statistical data, can be accomplished with systems such as SafeJack. It is, therefore, a further important aspect of the present invention to work seamlessly with monitored gaming tables such as a SafeJack table.

[0038] Moreover, bonus systems of various types are currently being used with monitored gaming tables. "Progressive Blackjack", for example, is dealt exactly the same as a Blackjack game in the manner described above. Separate jackpots are determined by the first, second, third, or fourth cards dealt to a player. Players optionally make a progressive side bet, in addition to their regular bet, prior to the start of the game, and can win a progressive jackpot if they are dealt one of the various combinations of aces with their first two, three, or four cards (i.e., two unsuited aces, two suited aces, three unsuited aces, three suited aces, and four red or four black aces). Even if the dealer beats their hand, a participating player can win a progressive bonus. A colorful LED display **34** on the monitored gaming table **10** keeps the players aware of the ever increasing jackpot size in real-time.

[0039] A dealer keypad **36** provided on monitored gaming table **10** facilitates the dealer's handling of all aspects of the progressive game. Hard meter and security key functions are built into the keypad **36**, which also provides a record of buy-ins, enables tournament play, and addresses nonstandard play. Accordingly, keypad **36** can be used as the aforementioned first selecting means to select operation of the convertible gaming table **10** between a first monitoring means and a second monitoring means. In addition to the LED display **34** on monitored gaming table **10**, a controller

38 (**FIG. 5**) associated with such monitored gaming table **10** can be used to direct the display of the progressive jackpot information to large overhead, animated, displays (not shown). Moreover, a plurality of monitored gaming tables **10** can be linked to the system, in pit-to-pit and floor-to-floor fashion as shown in **FIG. 5**, for increased progressive payouts. See also monitoring systems disclosed in Acres et al., U.S. Pat. Nos. 5,655,961, 5,702,304, 5,741,183, and 5,752,882, each of which is incorporated herein by reference.

[**0040**] Since systems such as SafeJack do not normally intervene in the usual course of the game, players have come to accept them. Some players even seem to be so delighted with such highly developed technology that they prefer to play Blackjack only at monitored gaming tables. Due to the large acceptance and the approval of different U.S. gaming commissions, manufacturers have ordered the development of analogous systems for other casino table games.

[**0041**] The playing card-based game of Caribbean Stud noted above, for example, is a fast-paced, exciting game on its own. Casino operators have nevertheless found that adding the dimension of progressive jackpot payoffs creates further excitement and provides an additional incentive to play. Many slot and video poker players shun live gaming because rules are complicated or the games require too much concentration. Caribbean Stud, however, does away with all that. Five cards are dealt face down to each player. The dealer gets four cards down and the last card up. If the player thinks his or her hand can beat the dealer, another wager in addition to the ante bet is made. Winning players are paid for their call wager.

[**0042**] Each player can make a progressive side bet in addition to the regular ante prior to the start of each game. If a player stays in the hand after the deal and has a flush, full house, four of a kind, straight flush or royal flush, he or she wins all or part of the progressive. Even if the dealer beats the hand, the player can still win progressive cash. Like the SafeJack, monitored Caribbean Stud tables such as the Mikohn Caribbean Stud table can be equipped with an articulate dealer control panel that handles all aspects of the progressive game. Hard meter and security key functions are built right into the panel. Moreover, up to 256 tables can be linked to such progressive systems for gigantic progressive payouts. The convertible gaming table **10** according to the present invention is, likewise, adaptable for use in such environments.

[**0043**] Monitoring systems, such as those distributed by Acres Gaming, Inc. and Mikohn Gaming Corporation, accurately capture every detail and transaction of games such as Blackjack and Caribbean Stud, including handle, cards dealt, average bet, actual win/loss and the number of decisions made by each player. These conventional systems provide a host of features that help casino operators reduce expenses, rate players accurately, protect the game's integrity and improve profitability.

[**0044**] For example, table games managers can make decisions using accurate information. The unreliable performance indicators of estimated "drop" and "hold" are replaced with exact "handle" and "win". Actual real-time results are used to analyze a given table's profitability, just as in slot machines. Any given player's true worth can be determined, because such monitoring systems capture and verify the exact amount of each wager, the average bet and the number of decisions made. Furthermore, since every card can also be recorded with such systems, a player's decisions can be compared to basic strategy and card-counting techniques to rate the skill level and determine the true worth of each player. Manually estimated theoretical win is replaced with automatically collected exact information, allowing management to maximize profits by eliminating unprofitable players and allocating marketing dollars more effectively.

[**0045**] Optional card readers **40** in the table rails at each player's position **22** facilitate every player, from "high rollers" to "grinders", to be rated accurately. Marketing efforts can, thus, be targeted to make every customer feel valued. Tracking of high-value customers who do not use player cards can also be initiated manually. Such systems can also automatically begin tracking any player whose wager varies from the minimum by an amount you determine. However tracked, the actual win/loss of a given player can be provided. Such systems calculate the total of each hand and identifies winners and losers.

[**0046**] For example, with the SafeJack system, a tri-colored light at a player panel **42** in front of each player signals the dealer when to pay (green), collect (red), or push (yellow). A "stand" button is also incorporated at player panel **42**, to be pushed by the player instead of otherwise inconsistent hand signals indicating that the player wants no more cards. Automatic monitoring of each bet can alert the dealer to "bet pressing" and "bet pinching". The system records a player's original wager and displays it on the dealer play display **44**. Such display **44** not only verifies each player's original wager but it also displays each player's card totals, thereby replacing formerly used Blackjack prisms. As noted previously, the system records the assignment of each card dealt to a specific position in order to guard against card swapping.

[**0047**] Moreover, casino employee productivity can be improved. Clerical duties are reduced because vital information such as names, account numbers, handle, average bet and win/loss are automatically fed into the casino's system. Hosts can be more effective because accurate rating information is available immediately for "comping" decisions. More meaningful demographic data can thus be accumulated, including detailed player profiles to bring "points-for-play" and frequent gambler programs to the tables.

[**0048**] Accordingly, it is still a further important aspect of the present invention to provide gaming tables of the likes known in the prior art which are nevertheless convertible from one casino game to another.

[**0049**] The convertible gaming table **10** (**FIG. 4**), therefore, comprises a first means for monitoring wagers of a plurality of players playing the first casino game **46**, a second means for monitoring wagers of the plurality of players playing the second casino game **48**, and a first means for selecting operation of the first monitoring means and the second monitoring means **50**. First selecting means **50** is, in a presently preferred embodiment of the invention herein, mounted to the table base **12** in the form of, for example, the dealer keypad **36**.

[**0050**] Such first selecting means **50** is adapted to select either of the first monitoring means **46** or the second

monitoring means **48**. As an alternative, it may be adapted to select both of the first monitoring means **46** or the second monitoring means **48**. A multi-option selecting means is also desirable to adapt such first selecting means **50** to select either of the first monitoring means **46** or the second monitoring means **48**, both of the first monitoring means **46** or the second monitoring means **48**, and neither of the first monitoring means **46** or the second monitoring means **48**. Each of the above embodiments of the first selecting means **50** may suitably be provided through the use of software control. For example, a single Mikohn table can be configured to include SafeChip sensors in bet areas **22***a* corresponding both to the playing card-based casino games Baccarat, Blackjack, and Caribbean Stud. It can, likewise, be configured to include a conventional shoe **24** which identifies and records each card and where dealt. Moreover, positioning and/or selection of SafeChip sensors for bet areas **22***a* that correspond to non-playing card-based casino games such as Roulette and Craps is easily accomplished.

[**0051**] Accordingly, and referring back to **FIG. 1, a** convertible gaming table **10** which is adapted to be used with monitoring systems known in the prior art can be configured to play Craps on a table base **12** which was previously configured to play Blackjack. Some experts say that there are three essential elements to the game of Craps: the table, the layout and the dice. Unlike the typical Craps table which comprises a rectangular table with high sides, large enough to accommodate from ten to twenty-five players, however, the convertible gaming table **10** according to the present invention is much smaller and accommodates only seven players. Convertible gaming table **10**, furthermore, has a layout with only two distinct sections. As with a Blackjack table, the convertible gaming table **10** includes a semi-circular outer section **10***a*, where players sit and place their bets, and a straight inner section **10***b*, where the dealer stands at dealer position **26**. Thus, at particularly slow times when more players are inclined to play casino games other than Craps, the novel convertible gaming table **10** according to the present invention facilitates the play of Craps by up to seven players with only one casino employee required. The other dealer, boxman, and stickman are obviated by virtue of the efficient layout provided herein.

[**0052**] While the two dice used in the play of Craps on convertible gaming table **10** can be standard dice, they may also comprise similarly-sized, six-sided cubes which have one to six dots in the normal configuration, wherein each dot comprises a digitally-readable means of identification. For example, each dot could be formed from any suitable electrically-readable, magnetically-readable, or optically-readable component such as a miniature radio transmitter, thin film PVDF sensor, LED, or the like. A corresponding detector system can be placed in the upper surface **20** of table base **12** to permit detection of each roll. For example, with a magnetically-readable PVDF dot-based pair of dice, the upper surface **20** can include a grid (not shown) adapted to detect the dots contacting upper surface **20**. An easy algorithm to determine what face of the die is showing can be resolved from the detection of which face is contacting the upper surface **20**. Likewise, for an optically-readable LED dot-based pair of dice, three or more optical detectors (not shown) can be placed about the periphery of the rail **18** to detect light output from the LEDs and, thereby, determine what face is contacting the upper surface **20**. Unlike the magnetically-readable system proposed above, however, the optically-readable system of the present invention must be capable of detecting two adjoining faces on each die. A similarly easy algorithm to determine what face of the die is showing can be resolved thereafter. Detection of radio frequencies to track objects is well known in the gaming industry, as evidenced by the use of SafeChips described above. Accordingly, a electrically-readable detection system could be easily incorporated within the convertible gaming table **10** of the present invention.

[**0053**] The game of Craps begins when the stickman offers a player a box from which he or she is to choose two dice. This player is now called the "shooter". The shooter and other players at the table place one of two bets, either a "pass line" bet or a "don't pass line" bet in areas **52** or **54** as shown in **FIG. 1**. Essentially, it is a bet with or against the shooter. A pass line bet is one in which a player wagers that the outcome of the first roll (called the "come-out roll"), will be either a total of seven or eleven. A don't pass line bet is one in which a player wagers that the come-out roll will be two or three, rolls that are commonly referred to as "Craps." A roll of twelve also is Craps, but the house typically doesn't pay on twelve to the don't pass line in order to keep a favorable percentage. If any other number is thrown, then that number is the "point". That is, the shooter continues throwing the dice until the point number is thrown again, which is a winning roll for pass line bettors. However, if the shooter rolls seven prior to rolling the point number, then the don't pass bettors win.

[**0054**] For example, a shooter's come-out roll is six. That roll establishes six as the point. The shooter's next roll is five. Because five is neither the point nor seven, it is considered a neutral roll and the shooter rolls again. The shooter's next roll is six, and the pass line bettors win their bets, while the house collects the don't pass bettors' wagers.

[**0055**] Conversely, consider the situation where the shooter's come-out roll is a four. On his or her next roll, the shooter rolls a seven. Because seven was rolled before the point, don't pass bettors win and all pass line bettors lose their wagers to the house. Payoffs on the pass line and don't pass line are even money.

[**0056**] A specific shooter continues throwing the dice until a seven is rolled. Even if the shooter rolls Craps in the come-out roll, he or she remains the shooter. It is only upon a losing roll of seven that the shooter loses his or her turn and a new shooter is selected.

[**0057**] There are, however, other wagers. As noted above, there are two primary wagers players can make in Craps: pass line wagers and don't pass wagers placed in areas **52** and **54**. Players typically may also place "come" and "don't come" bets in areas **58** or **60**. Come and don't come bets operate similarly to pass line and don't pass line bets, except they are made after the come-out roll and the point has been established. Essentially, a come wager is one in which the player is betting on which numbers will appear after the point has been established. Come bets may be made every roll until the point is made or seven is rolled.

[**0058**] For example, a shooter's come-out roll is four. This establishes the point as four. A player then places a wager on the come. The shooter's next roll is nine. The player's come wager is now on nine. If the shooter rolls nine again before rolling seven, the player's come wager is a winner. However, if the shooter rolls seven before the come point is reached, the bet is lost.

[0059] Pass line bettors are also allowed to make an additional wager after the point has been established. These wagers, called "free-odd" wagers, are bets that the point will be thrown again before seven. Payoffs are either one-to-one or, at some tables, double the original wager.

[0060] Another type of bet a player may choose to make is a proposition bet. In these wagers, the player is betting on the outcome of the next roll of the dice, for example, seven, or any combination of two or twelve, three or eleven, or any Craps (two, three, or twelve). These bets may be placed on the convertible gaming table **10** in any one or more of the areas **62**, **64**, **66**, **68**, **70**, **72**, **74**, **76**, **78**, **80**, **82**, **84**, **86**, **88**, **90**, **92**, **94**, **96**, **98**, or **100**. Each of those areas would, therefore, incorporate a respective sensor (not shown) to detect the amount of wagers made by each player. The odds against winning proposition bets are extremely high; however, the payoffs are among the best as shown in **FIG. 1**.

[0061] In accordance with another important aspect of the present invention, the convertible gaming table **10** as shown in **FIG. 5** may optionally comprise a third means **102** for monitoring jackpots won by the plurality of players playing the first casino game, and a fourth means **104** for monitoring jackpots won by the plurality of players playing the second casino game. A second means **106** for selecting operation of the third monitoring means **102** and the fourth monitoring means **104**, similar in nature to the first selecting means **50**, may also be provided. That is, the convertible gaming table **10** according to present invention is adaptable to select either of the third monitoring means **102** or the fourth monitoring means **104**. It can, likewise, be adapted to select both of the third monitoring means **102** or the fourth monitoring means **104**. Alternatively, it can be a multi-option selecting means that is adapted to select either of the third monitoring means **102** or the fourth monitoring means **104**, both of the third monitoring means **102** and the fourth monitoring means **104**, and neither of the third monitoring means **102** or the fourth monitoring means **104**. In a manner similar to the first selecting means **50**, this multi-option second selecting means **106** may suitably be accomplished through the use of software control to incorporate casino games played with and/or without playing cards.

[0062] In accordance with still another important aspect of the present invention, the convertible gaming table **10** may optionally comprise a means **108** for awarding a selected one of the plurality of players playing the first casino game a bonus. It may, likewise, further comprise a means **110** for awarding a selected one of the plurality of players playing the second casino game a bonus. As a further alternative, it may comprise both a first means **108** for awarding a selected one of the plurality of players playing the first casino game a bonus, and a second means **110** for awarding a selected one of the plurality of players playing the second casino game a bonus. The bonus may suitably comprise a progressive jackpot.

[0063] In accordance with yet another important aspect of the present invention, the convertible gaming table **10** may optionally comprise a third means **112** for selecting operation of the first awarding means **108** and the second awarding means **110**. Such third selecting means **112** may be adapted to select either of the first awarding means **108** and the second awarding means **110**. It may also be adapted to select both of the first awarding means **108** and the second awarding means **110**. Alternatively, it may be adapted to select either of the first awarding means **108** or the second awarding means **110**, both of the first awarding means **108** and the second awarding means **110**, and neither of the first awarding means **108** and the second awarding means **110**. As with the first **50** and second selecting means **106**, this multi-option third selecting means **112** may conveniently be provided through the use of suitable software control.

[0064] Obviously, many modifications and variations of the convertible gaming table **10** according to the present invention are possible when viewed in light of the foregoing teachings. It should be understood, therefore, that all such modifications and variations could be used in accordance with the present invention and would, thus, be deemed to fall within the scope of the appended claims.

What we claim as our invention is:

1. A convertible gaming table, comprising:

a table base adapted for play of a first casino game;

a removable game table covering formed to fit said table base, cover said first casino game, and adapt said table base for play of a second casino game; and

means for retaining said game table covering on said table base.

2. The convertible gaming table according to claim 1, wherein said play of said first casino game and said second casino game is controlled by a single casino employee.

3. The convertible gaming table according to claim 1, wherein said first casino game comprises Blackjack and said second casino game comprises Craps.

4. The convertible gaming table according to claim 3, wherein said retaining means comprises a rail, encompassing an upper surface of said table base and adapted to keep a roll of dice upon said upper surface.

5. The convertible gaming table according to claim 1, further comprising:

first means for monitoring wagers of a plurality of players playing said first casino game;

second means for monitoring wagers of said plurality of players playing said second casino game; and

first means, mounted to said table base, for selecting operation of said first monitoring means and said second monitoring means.

6. The convertible gaming table according to claim 5, wherein said first selecting means is adapted to select either of said first monitoring means or said second monitoring means.

7. The convertible gaming table according to claim 5, wherein said first selecting means is adapted to select both of said first monitoring means or said second monitoring means.

8. The convertible gaming table according to claim 5, wherein said first selecting means is adapted to select either of said first monitoring means or said second monitoring means, both of said first monitoring means or said second monitoring means, and neither of said first monitoring means or said second monitoring means.

9. The convertible gaming table according to claim 8, further comprising:

third means for monitoring jackpots won by said plurality of players playing said first casino game; and

fourth means for monitoring jackpots won by said plurality of players playing said second casino game.

10. The convertible gaming table according to claim 9, further comprising second means for selecting operation of said third monitoring means and said fourth monitoring means.

11. The convertible gaming table according to claim 10, wherein said second selecting means is adapted to select either of said third monitoring means or said fourth monitoring means.

12. The convertible gaming table according to claim 10, wherein said second selecting means is adapted to select both of said third monitoring means or said fourth monitoring means.

13. The convertible gaming table according to claim 10, wherein said second selecting means is adapted to select either of said third monitoring means or said fourth monitoring means, both of said third monitoring means or said fourth monitoring means, and neither of said third monitoring means or said fourth monitoring means.

14. The convertible gaming table according to claim 5, further comprising means for awarding a selected one of said plurality of players playing said first casino game a bonus.

15. The convertible gaming table according to claim 5, further comprising means for awarding a selected one of said plurality of players playing said second casino game a bonus.

16. The convertible gaming table according to claim 5, further comprising:

first means for awarding a selected one of said plurality of players playing said first casino game a bonus; and

second means for awarding a selected one of said plurality of players playing said second casino game a bonus.

17. The convertible gaming table according to any of claims **14**, **15**, or **16**, wherein said bonus comprises a progressive jackpot.

18. The convertible gaming table according to claim 16, further comprising third means for selecting operation of said first awarding means and said second awarding means.

19. The convertible gaming table according to claim 18, wherein said third selecting means is adapted to select either of said first awarding means and said second awarding means.

20. The convertible gaming table according to claim 18, wherein said third selecting means is adapted to select both of said first awarding means and said second awarding means.

21. The convertible gaming table according to claim 18, wherein said third selecting means is adapted to select either of said first awarding means and said second awarding means, both of said first awarding means and said second awarding means, and neither of said first awarding means and said second awarding means

22. A convertible gaming table, comprising:

a table base adapted for play of a first, playing card-based game;

a removable game table covering formed to fit said table base, cover said first game, and adapt said table base for play of a second, non-playing card-based game; and

means for retaining said game table covering on said table base;

wherein said play of said first game and said second game is controlled by a single casino employee.

23. The convertible gaming table according to claim 22, wherein said first game is selected from the group consisting of Baccarat, Blackjack, Big Six, Caribbean Stud™, Casino War™, Let It Ride™, Pai Gow, and Spanish twenty-one™.

24. The convertible gaming table according to claim 22, wherein said second game is selected from the group consisting of Craps and Roulette.

25. A method of converting a casino gaming table, comprising the steps of:

providing a table base which is adapted for play of a first casino game;

providing a removable game table covering for a second casino game; and

covering said table base with said removable game table covering, and thereby adapting said table base for play of said second casino game.

26. The method according to claim 25, further comprising the steps of:

providing a means for retaining said game table covering on said table base; and

controlling play of said first game and said second game by a single casino employee.

27. The method according to claim 26, wherein said retaining means comprises a rail encompassing an upper surface of said table base of a height sufficient to substantially prevent a pair of rolling dice from leaving said upper surface.

28. The method according to claim 25, wherein said first casino game comprises a playing card-based game and said second casino game comprises a non-playing card-based game.

29. The method according to claim 25, wherein said first and second casino games both comprise a playing card-based game.

30. The method according to claim 25, wherein said first and second casino games both comprise a non-playing card-based game.

31. The method according to claim 25, wherein said first casino game comprises a non-playing card-based game and said second casino game comprises a playing card-based game.

* * * * *