PCT WORLD INTELLECTUAL PROPERTY ORGANIZATION
International Bureau

INTERNATIONAL APPLICATION PUBLISHED UNDER THE PATENT COOPERATION TREATY (PCT)

(51) International Patent Classification 4 :		(11) International Publication Number:
A61B 11/00	A1	WO 88/ 06865
		(43) International Publication Date: 22 September 1988 (22.09.88)

(21) International Application Number: PCT/NL88/00010

(22) International Filing Date: 17 March 1988 (17.03.88)

(31) Priority Application Number: 8700667

(32) Priority Date: 20 March 1987 (20.03.87)

(33) Priority Country: NL

(71)(72) Applicant and Inventor: BIEMANS, Rogier, Guido, Marie [NL/NL]; Lammertsweg 4, NL-7535 DN Enschede (NL).

(74) Agent: TIMMERS, C., H., J.; Exterpatent B.V., Willem Witsenplein 4, NL-2596 BK The Hague (NL).

(81) Designated States: AT (European patent), AU, BE (European patent), CH (European patent), DE (European patent), FR (European patent), GB (European patent), IT (European patent), JP, LU (European patent), NL (European patent), SE (European patent), US.

Published
With international search report.

(54) Title: ENDOVASCULAR CONNECTOR

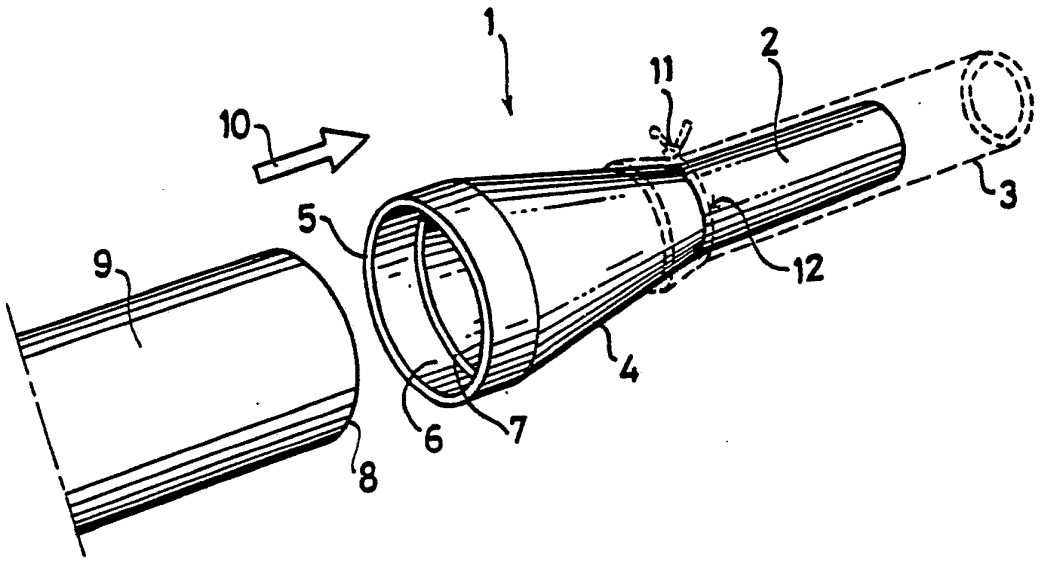

(57) Abstract

Endovascular connector (1) for interconnecting the lumina of blood vessels (3, 9) and/or grafts, comprising a tube-shaped coupling part with a first end (2), destined to be inserted into the vessel (3) and a second end, destined to accept the open end of the other vessel (9) and/or graft.

FOR THE PURPOSES OF INFORMATION ONLY

Codes used to identify States party to the PCT on the front pages of pamphlets publishing international applications under the PCT.

AT	Austria	**FR**	France	**ML**	Mali
AU	Australia	**GA**	Gabon	**MR**	Mauritania
BB	Barbados	**GB**	United Kingdom	**MW**	Malawi
BE	Belgium	**HU**	Hungary	**NL**	Netherlands
BG	Bulgaria	**IT**	Italy	**NO**	Norway
BJ	Benin	**JP**	Japan	**RO**	Romania
BR	Brazil	**KP**	Democratic People's Republic of Korea	**SD**	Sudan
CF	Central African Republic			**SE**	Sweden
CG	Congo	**KR**	Republic of Korea	**SN**	Senegal
CH	Switzerland	**LI**	Liechtenstein	**SU**	Soviet Union
CM	Cameroon	**LK**	Sri Lanka	**TD**	Chad
DE	Germany, Federal Republic of	**LU**	Luxembourg	**TG**	Togo
DK	Denmark	**MC**	Monaco	**US**	United States of America
FI	Finland	**MG**	Madagascar		

Endovascular connector.

The invention relates to a device to interconnect the lumina of vessels and/or grafts (artificial vessels). In the following description such a device shall be named an "endovascular connector", or: "connector".

Despite the spectacular increase in vascular surgical technics during the recent years many reconstructions obtained by vascular surgery are still unsuccessfull. In such surgery vessels - natural vessels, or natural vessels on the one hand and artificial vessels (grafts) on the other hand - are interconnected by sutures which go through the vascular or graft wall. At the site where the sutures are located forces are active with a complicated interaction. There are, on the one hand, forces directed in the longitudinal direction of the vessel and on the other hand there are circular forces which are the result of the periodic dilation of the vessel, brought about by the ondulation of the passing bloodstream. Furthermore there are also radially directed forces. These forces are considered to be the cause of origin of "hyperplasia" (a reactive thickening of the vascular wall which decreases the free cross section of the vessel). It is clear that this increases markedly the chance of failure of the reconstruction.

There where a graft is connected to a natural vessel there is, of course, a difference in rigidity (in specialized literature denoted as "compliance mismatch") between the graft and the natural vessel, which particularly at a distel anastomosis leads to a shock loading of the transition between the graft and the vessel.

Whatever the type of anastomosis may be it is most desirable that there is no essential difference in diameter between a proximal vessel, the anastomosis and the distel vessel or graft. With the known technics this is, however, practically impossible to obtain.

The invention aims to provide a solution for these problems and is based upon the insight that this problem will

be overcome when both vessels are interconnected by a connector which is designed in such a way that at both vessels optimal suture places and interconnecting places with the relative vessel respectively will be obtained. Thus the place of fixation, corresponding with the place where reactive thickening of the vessel wall occurs is separated from the place of transition of the lumina of the respective vessels (graft), and this transition can furthermore be nearly isometric. As a result turbulences are limited to a minimum.

Thus the invention proposes the use of a tube-shaped coupling part with a first end, designed to be inserted into the open end of the body vessel and with another end to take up the open end of the other vessel.

This connector must, on the one hand, have sufficient rigidity and on the other hand must keep the lumen as great as possible; using the known materials, already used for grafts and for instance known in the Dutch patent specifications 164470 and 165647 both these requirements can be met, particularly with regard to the mesh size necessary to obtain an optimal incorporation.

Preferred embodiments are described in the subclaims.

The forces, described above, are taken up at the place where the ligature is applied: when there is a reactive wall thickening at all this will be at a distance from the end of the inserting part so that the free cross section of the vessel will not be influenced by it. Furthermore at both ends of the connector there will be an ingrow of the vessel material which improves the interconnection and the sealing.

The connector according to the invention results into a significant simplification of the anastosmosis technics which thus can also be applied by non-vascular surgeons. This is of particular interest for the treatment of patients with serious injuries as a result of accidents or calamities: the arterial and/or venous circulation can be repaired quickly so that the time of ischaemia will be shortened and

the chance of irreversible damage of organs and parts of the body decreases sharply. If necessary a definitive reconstruction can be undertaken at a later moment.

Other uses are the use for applying arterio-venous shunts and fistels for haemodialysis which can be operative shortly after they have been applied; when used with arterio-venous shunts they can be replaced easily, partly and as a whole.

Further possibilities are the use during organ transplantation and reconstructive surgery of the veins.

The invention will be elucidated on the hand of the drawing. Herein is:

Figure 1a a perspective view of a first embodiment according to the invention, to be used to interconnect vessels and/or grafts with mutually different diameter,

figure 1b a longitudinal section through this embodiment,

figure 2a a perspective view of a second embodiment according to the invention, also to be used to interconnect the vessels and/or grafts with mutual different diameter,

figure 2b a longitudinal section through this embodiment,

figure 3 a longitudinal section through a third embodiment to be used to interconnect vessels and/or grafts with essential equal diameter,

figure 4 a longitudinal section through a fourth embodiment, also to be used to interconnect vessels and/or grafts with essentially the same diameter,

figure 5a a perspective view of a fifth embodiment, destined to provide a branch-off on a vessel,

figure 5b is a longitudinal section through this embodiment.

The embodiment shown in figure 1a is denoted as a whole with reference numeral 1.

This, somewhat funnel-shaped connector has an inserting end 2 destined to be inserted into a blood vessel 3, said inserting end 2 merging in a diverging body part 4

of which the wall is, in the vicinity of the mouth 5, thinner along a part 6, resulting into an inner shoulder 7. This shoulder 7 acts as an abutment for the end edge 8 of a second vessel 9 which is to be inserted in the mouth 5. This connector is to be used to provide an endovascular connection in which the blood flows in the direction of the arrow 10.

The vessel 3 is fixed by means of a ligature 11 at the inserting end 2 and a circumferential groove 12, formed at the place of the transition between the inserting end 2 and the body part 4, improves the fixation obtained with this ligature. If necesseray a ring-shaped thickening can be provided adjacent to said groove, but this is not shown in the drawing. The embodiment shown in the figures 1a and 1b is destined to be used in the case where the diameters of the vessels between which an interconnection is to be provided are mutually different.

The connector 16 according to the figures 2a and 2b is destined to be used in the case where the blood flows from the inserting end to the other end, thus in the direction of the arrow 15. In these figures parts corresponding to the ones already shown in the figures 1a and 1b are indicated with the same reference numerals, an accent added.

In the embodiment according to the figures 2a and 2b the vessel 9' is pushed over the mouth 5'; to that end the end part 17 of the body part 4' has a somewhat smaller diameter resulting into a shoulder 18 which, when the vessel 9' is put into place, acts as an abutment for the end edge 8' of this vessel.

The embodiment according to figure 3 essentially corresponds with the ones according to the figures 1a and 1b, with, however, the difference that the diameter of the connector, which is indicated as a whole with reference numeral 20, has the same value over its entire length. The inserting end 21, which is to be inserted into the vessel 22 is here, too, provided with a circumferential groove 23

to keep the ligature 24 in place while the take-up end 25 has over part of its length a smaller diameter resulting into a shoulder 26 which acts as an abutment for the end edge 27 of the vessel 28 to be inserted into it.

This embodiment is destined to be used when the blood flows in the direction of the arrow 29.

The embodiment according to figure 4 corresponds essentially with the one according to figure 3; corresponding parts are here, too, indicated with the same reference numerals, with an accent added.

This connector, denoted as a whole with reference numeral 30, is destined to be used in those cases where the blood flows in the direction of the arrow 31 and to this end the mouth 32 for the vessel 33 is provided with a part 34 with smaller diameter so that an outer shoulder 35 is obtained which acts as an abutment for the end 36 of the vessel 33.

The embodiment according to the figures 5a and 5b is to be used for constructing a branch-off on a blood vessel; the latter is denoted in figure 5a with reference numeral 40.

The connector, denoted as a whole with reference numeral 41 comprises a tube-shaped part 42 with two inserting ends 43 and 44, each provided with a circumferential groove 45, 46 respectively and a branch-off 47 of which the narrowed part 48, which, by means of a shoulder 49, merges into the part 47 is destined to accept the vessel 50.

Figure 5a shows the use of this connector: in the vessel 40 a longitudinal incision 51 is formed with such a length that the tube-shaped part 42 can be inserted into it, for instance by firstly inserting this part and moving it as far as possible to the right until the left end can be inserted into the vessel via the incision, whereafter the connector is shifted to the left until the branch 47 lies in the center part of the incision; the connector is

thereafter fixed by means of the ligatures 52 and 53.

The vessel 50 is then pushed over the take-up end 48.

With regard to the connection between the ends of the respective connectors, indicated in the figures with the refence numerals 6, 17, 25, 34 and 48 and the vessels co-operating therewith it can be observed that these vessels can be fixed with a suitable number of stitches or sutures, which are provided in such a way that they remain outside the lumen.

Claims:

1. Device for interconnecting the lumina of blood vessels and /or graft, characterized by a tube-shaped coupling part with a first end, destined to be inserted into the vessel and a second end, destined to accept the open end of the other vessel and/or graft.

2. Device according to claim 1, characterized in that the second end is provided at a distance from its end edge with an outer abutment for the end edge of a vessel to be placed over the outer surface of this second end.

3. Device according to claim 2, characterized in that this abutment is formed by a stepped transition of the outer surface of the, narrowed, end area to the enlarged outer circumference of the coupling part.

4. Device according to claim 1, characterized in that the second end is at a distance of the end edge thereof provided with an internal abutment for the end edge of a vessel to be inserted into this end.

5. Device according to claim 4, characterized in that this abutment is formed by the stepped transition of the inner wall of the, enlarged, end area to the narrower inner bore of the coupling part.

6. Device according to claim 1 - 4, characterized in that the coupling part is provided with a tube-shaped branch, connecting with the space therein, and destined to be inserted into, or to accept a third vessel.

7. Device according to claim 1 - 6, characterized in that the outer wall of the part to be inserted is provided with a circumferential groove and/or ring.

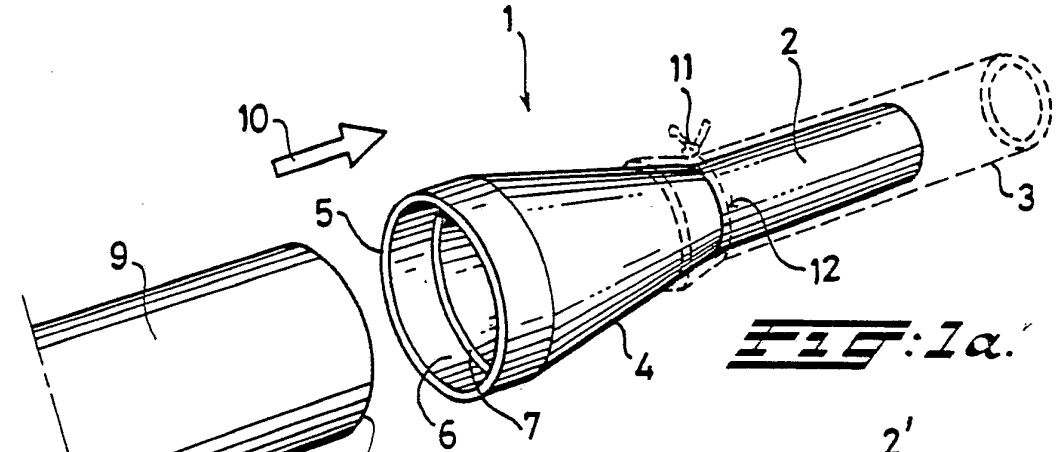

Fig: 1a.

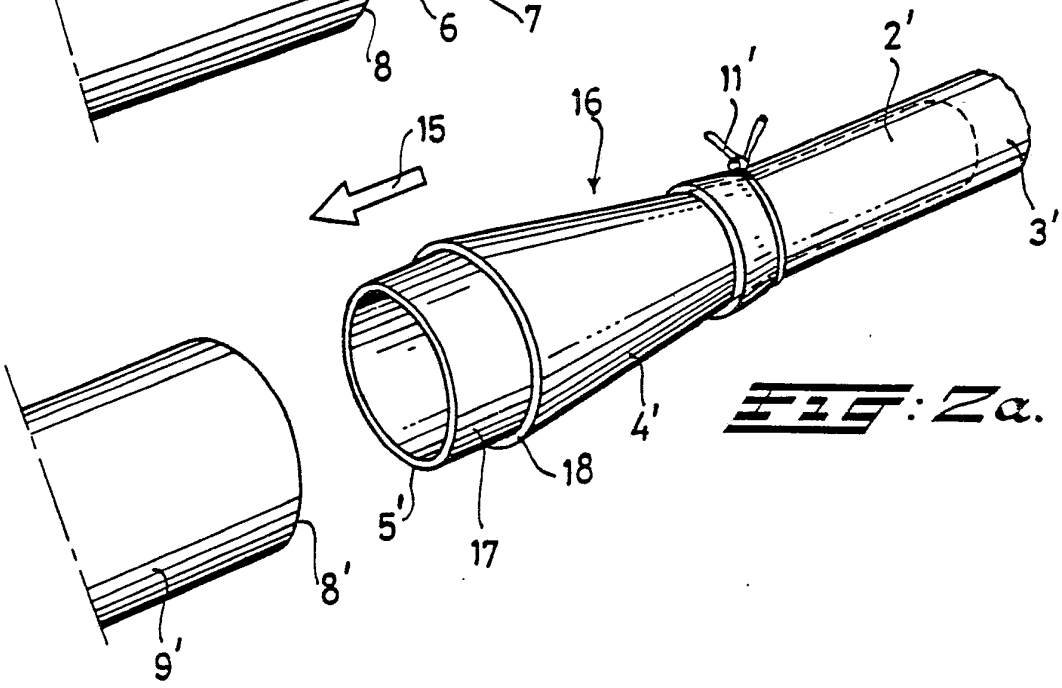

Fig: 2a.

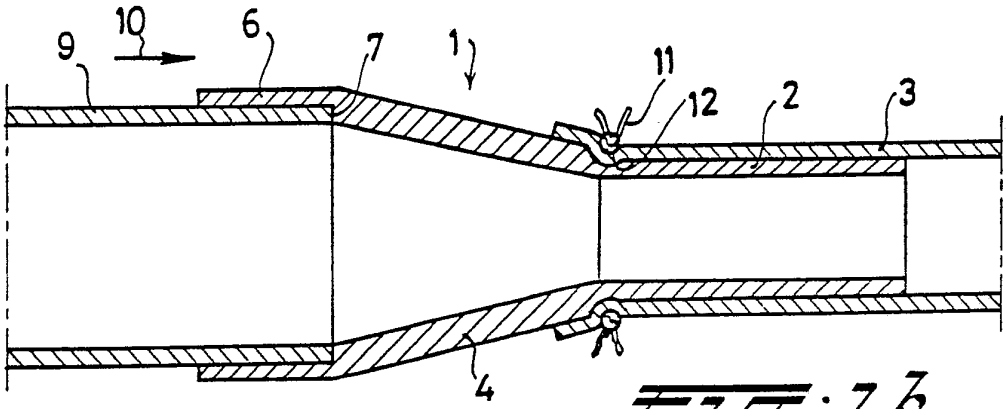

Fig: 1b.

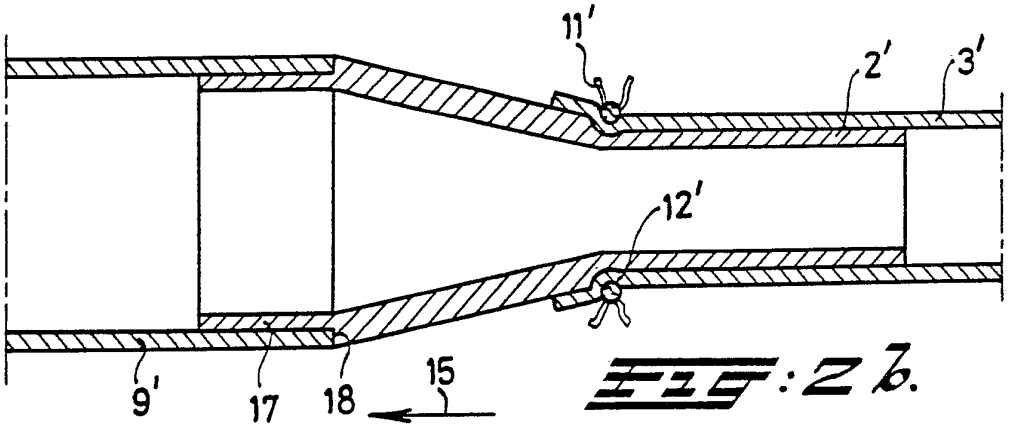

Fig: 2b.

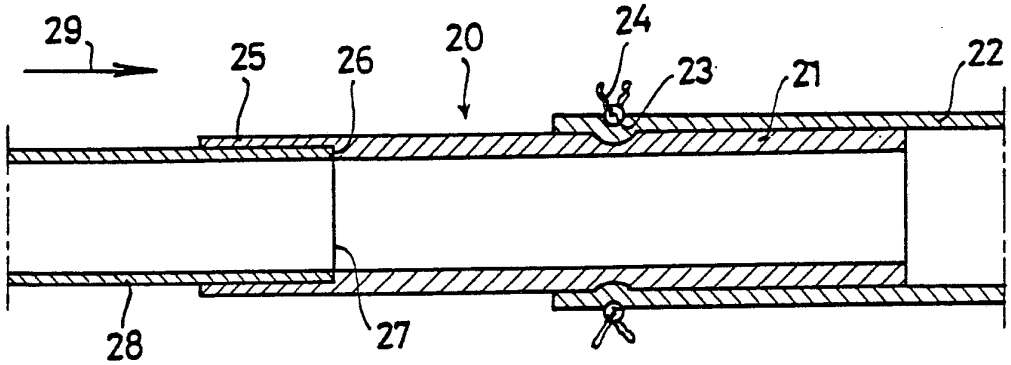

Fig: 3.

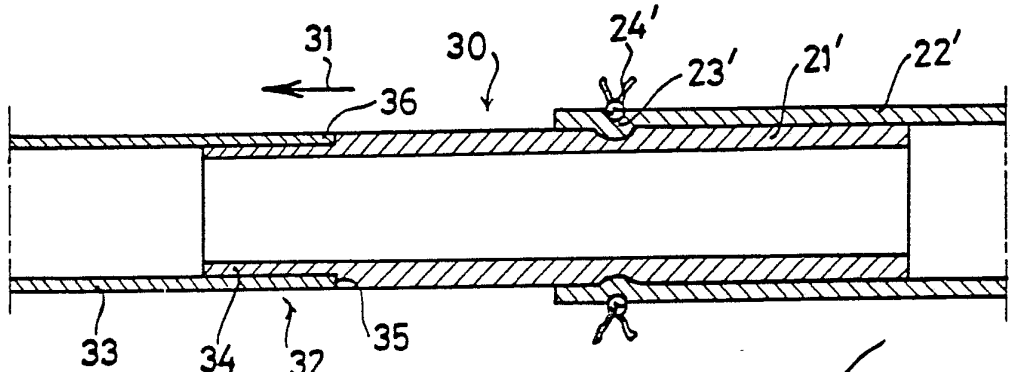

Fig: 4.

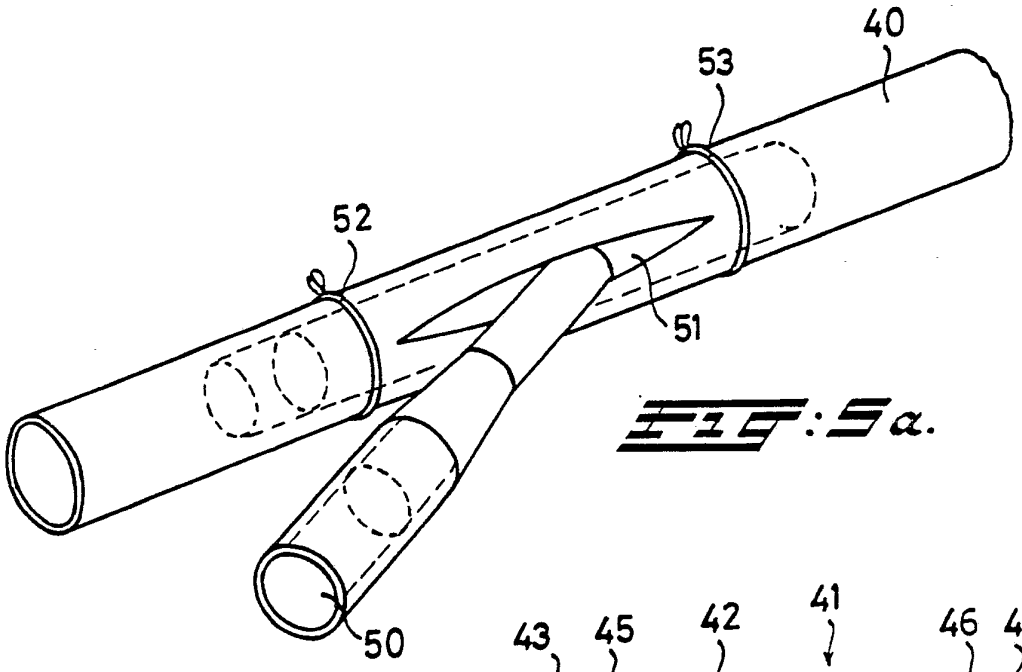

Fig: 5a.

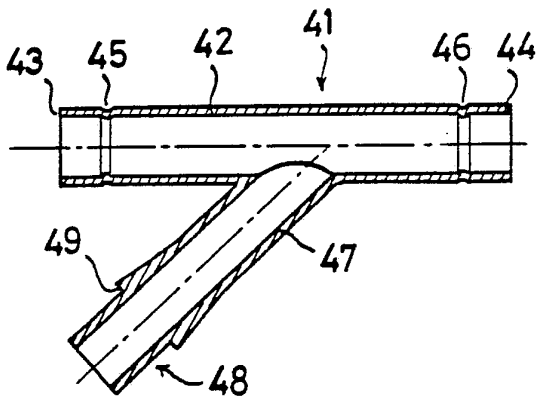

Fig: 5b.

INTERNATIONAL SEARCH REPORT

International Application No PCT/NL 88/00010

I. CLASSIFICATION OF SUBJECT MATTER (if several classification symbols apply, indicate all) [6]

According to International Patent Classification (IPC) or to both National Classification and IPC

IPC[4]: A 61 B 11/00

II. FIELDS SEARCHED

Minimum Documentation Searched [7]

Classification System	Classification Symbols
IPC[4]	A 61 B; A 61 F

Documentation Searched other than Minimum Documentation to the Extent that such Documents are included in the Fields Searched [8]

III. DOCUMENTS CONSIDERED TO BE RELEVANT [9]

Category *	Citation of Document, [11] with indication, where appropriate, of the relevant passages [12]	Relevant to Claim No. [13]
X	US, A, 3435823 (EDWARDS) 1 April 1969, see figures 11,12; column 6, lines 2-13	1-3,7
Y	--	6
Y	DE, A, 2034413 (DAINIPPON PHARMACEUTICAL CO. LTD.) 13 January 1972, see figures; claims 9,10	6
A	-- US, A, 4553961 (POHNDORF) 19 November 1985, see figure 9; column 5, lines 29-39	4,5
A	-- DE, A, 1566136 (F.H. PFAU-WANFRIED GmbH) 12 February 1970	
A	DE, A, 3118484 (ARCHIBALD) 25 November 1982	

---

* Special categories of cited documents: [10]

"A" document defining the general state of the art which is not considered to be of particular relevance

"E" earlier document but published on or after the international filing date

"L" document which may throw doubts on priority claim(s) or which is cited to establish the publication date of another citation or other special reason (as specified)

"O" document referring to an oral disclosure, use, exhibition or other means

"P" document published prior to the international filing date but later than the priority date claimed

"T" later document published after the international filing date or priority date and not in conflict with the application but cited to understand the principle or theory underlying the invention

"X" document of particular relevance; the claimed invention cannot be considered novel or cannot be considered to involve an inventive step

"Y" document of particular relevance; the claimed invention cannot be considered to involve an inventive step when the document is combined with one or more other such documents, such combination being obvious to a person skilled in the art.

"&" document member of the same patent family

IV. CERTIFICATION

Date of the Actual Completion of the International Search	Date of Mailing of this International Search Report
15th June 1988	7 JUL 1988
International Searching Authority	**Signature of Authorized Officer**
EUROPEAN PATENT OFFICE	P.C.G. VAN DER PUTTEN

Form PCT/ISA/210 (second sheet) (January 1985)

ANNEX TO THE INTERNATIONAL SEARCH REPORT ON INTERNATIONAL PATENT APPLICATION NO. NL 8800010 SA 21636

This annex lists the patent family members relating to the patent documents cited in the above-mentioned international search report. The members are as contained in the European Patent Office EDP file on 23/06/88
The European Patent Office is in no way liable for these particulars which are merely given for the purpose of information.

Patent document cited in search report	Publication date	Patent family member(s)	Publication date
US-A- 3435823	01-04-69	None	
DE-A- 2034413	13-01-72	None	
US-A- 4553961	19-11-85	None	
DE-A- 1566136	12-02-70	GB-A- 1181563	18-02-70
DE-A- 3118484	25-11-82	None	