April 4, 1950 J. R. LOCKETT 2,502,863

LEAK-DETECTING APPARATUS FOR OIL WELL CASINGS

Filed April 16, 1948

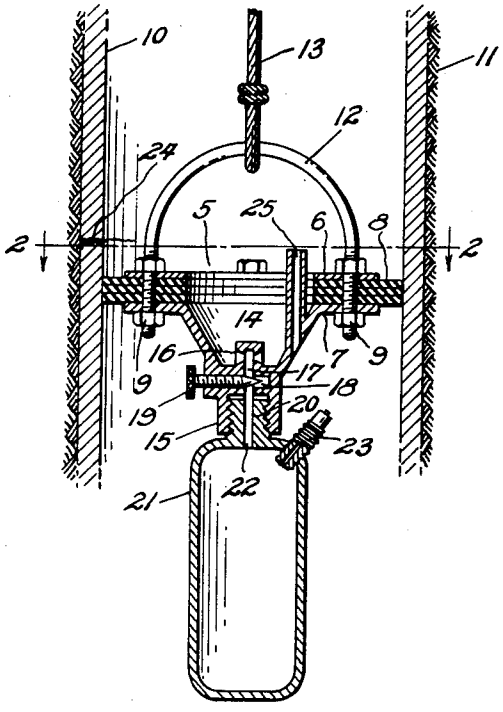

Fig. 1.

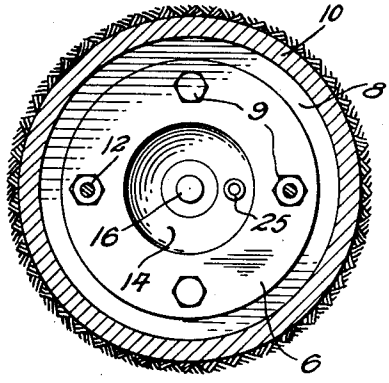

Fig. 2.

Inventor
John R. Lockett

By W. S. McDowell

Attorney

Patented Apr. 4, 1950

2,502,863

UNITED STATES PATENT OFFICE

2,502,863

LEAK-DETECTING APPARATUS FOR OIL WELL CASINGS

John R. Lockett, Columbus, Ohio

Application April 16, 1948, Serial No. 21,426

5 Claims. (Cl. 73—155)

1

This invention deals with leak-detecting apparatus of the type used in determining the presence of a liquid-admitting leak or break occurring within the walls of an oil well casing. The primary objective of the invention is the provision of mechanically efficient, yet economical apparatus for determining the presence of liquid-admitting leaks or breaks within an oil well casing and the locations of such leaks with respect to the ground surface, in order that the casing may be repaired without undue delay and extensive inspection of the entire casing.

It is another object of the present invention to provide apparatus for detecting liquid-admitting breaks or openings within an oil well casing which comprises a device for attachment to a lowering and raising cable and for insertion within an oil well casing to indicate by audible signal means the absence or presence of liquid-admitting openings occurring within the casing.

It is a further object of this invention to provide apparatus of the character described which comprises an air whistle having an associated compressed air storage tank for supplying air to the whistle to produce a continuous audible sound during downward travel of the device through the well casing, and which is constructed so as to collect liquids admitted through a break in the casing upon passage of the apparatus immediately below such break whereby to dampen or cause the discontinuance of audible sound from the whistle, thereby notifying operators at the ground surface of the presence of such a break, and making it possible to determine the depth of such a break by measurement of the lowering cable at the time the signal ceases.

For a more detailed explanation of the present invention, reference is made to the following detailed description and the accompanying drawing, wherein:

Fig. 1 is a medial vertical sectional view taken through a leak-detecting mechanism embodying the aspects of the present invention, and disclosing its operational relationship to an oil well casing;

Fig. 2 is a horizontal sectional view taken along the line 2—2 of Fig. 1.

With reference to the drawing, it will be seen that the present invention makes use of a body generally designated by the numeral 5 which comprises a pair of annular metallic plate-like members 6 and 7 between which are interposed a plurality of outwardly extending annular gasket members 8, and which are rigidly joined by a plurality of spaced fastening devices 9. The

2

gasket members 8 of the body may be formed from any suitable yieldable material, such as leather, rubber, or one of the yieldable synthetic resins, and are adapted for close-fitting wiping engagement with the inner wall of a tubular well casing 10 of the type used to form a casing wall for an oil well bore for purposes of retaining an earth wall 11, and preventing the latter from entering within the well shaft.

Advantageously, a pair of the fastening devices 9 may be formed so as to constitute a U-shaped bail member 12 by which the body may be easily connected with the end of a lowering and raising cable 13 for passage through the well casing.

The lower plate-like member 7 of the body is formed centrally with an upwardly opening cup or cavity 14 which terminates at its lowermost end in a screw threaded socket 15. Disposed substantially in the bottom of the cup 14 is a whistle-producing device 16 which is formed integral with the bottom wall of the cavity 14, and which is provided with a pair of oppositely registering openings communicating with a central air passage 17 which extends through the lower portion of the cup member and communicates with the screw-threaded socket 15. Intersecting the air passage 17 is a transversely disposed valve chamber 18 which contains a screw-threaded needle valve 19 which is adjustable to vary the opening of the passage 17 and to control the passage of air therethrough.

Maintained in threaded engagement with the socket 15 of the body is the screw-threaded neck portion 20 of a compressed gas supply tank or receptacle 21. The neck portion 20 of the tank is formed with an axially disposed opening 22 through which compressed gas may be discharged from the tank into the lower end of the air passage 17. The tank is further provided with a spring-loaded charging valve 23 of the type normally used in conjunction with pneumatic tires or other pneumatic apparatus, for the purpose of introducing compressed gas within a receptacle by means of the ordinary flexible compressed air supply hose and nozzle.

In operation, the compressed gas tank 21 is threaded within the socket 15 of the body, and with the needle valve 19 in a closed position, compressed gas is introduced within the tank by way of the charging valve 23. Prior to lowering the apparatus within the casing 10, the needle valve 19 is adjusted so as to admit a constant stream of gas through the air passage 17 and to the whistle device 16, in order that a continuous audible whistle is produced. At this time, the

apparatus is lowered within the casing 10, and allowed to descend at a relatively slow rate toward the bottom of the well. During passage of the apparatus through the casing, the presence of a liquid-admitting opening or break, such as is indicated by the numeral 24 of the drawing, will be detected upon passage of the body immediately below the plane of such opening, as water or other liquids introduced within the casing through the break 24 will be deposited upon the upper surface of the body, and will immediately be collected within the cup 14 thereof, thereby closing off the whistle opening and dampening or entirely extinguishing the audible sound emitted thereby. Upon cessation of the whistle, an operator positioned at ground level is apprised of the presence of liquid within the cup, and immediately stops descent of the body. At this time, a measurement of the lowering cable may be taken to determine the depth or relative position of the break or opening 24 in relation to the ground surface.

Due to the close-fitting and wiping engagement of the gasket members 8 of the body, it is necessary to provide for the release of air below the signal apparatus, as the same travels downwardly through the casing 10. Toward this end, the lower member 7 of the body is provided with an upwardly extending vent opening 25 through which air is free to pass from one to the other side of the body during lowering or raising operations.

In view of the foregoing, it will be seen that the present invention provides a mechanically efficient device for detecting the presence of breaks or leaks occurring within an oil well casing, and additionally to determine the relative location of such breaks with reference to the ground surface. Leak detection devices of the type formed in accordance with the present invention are characterized by their structural simplicity, their ease of operation, and their economy of manufacture, operation and maintenance.

While a present preferred embodiment of this invention has been disclosed in detail, it will be manifest that various modifications as to constructional details and design may be accomplished without departing from the spirit of the invention or the scope of the following claims.

I claim:

1. Apparatus for determining liquid-admitting openings within a well casing comprising a body for lowering within a well casing and for close-fitting wiping engagement with the walls thereof, said body being provided upon its upper surfaces with a cavity for the reception of liquids admitted through an opening in the walls of said casing upon passage of said body below the plane of such opening, and whistle means carried by said body and having a whistle opening communicating with the cavity of said body for emitting audible sound in the absence of liquid within the cavity of said body.

2. Apparatus for determining the depth of liquid-admitting openings occurring within a well casing comprising a body provided with outwardly extending sides for wiping engagement with the walls of a well casing and a centrally disposed liquid-receiving cavity, the cavity of said body serving to collect liquids admitted through an opening occurring within a well casing when said body is lowered therein below the plane of such an opening, and audio-signal means carried by said body and communicating with the cavity thereof for emitting a constant audible signal in the absence of liquid within the cavity of said body.

3. Apparatus for determining the depth of liquid-admitting openings occurring within the walls of the well casing comprising a body for lowering within a well casing, said body being provided with outwardly projecting side members for wiping engagement with the walls of a well casing and a centrally disposed cavity for the reception of liquids admitted through an opening occurring within the walls of such casing upon passage of said body below the plane of such an opening, a whistle opening disposed in the bottom portion of the cavity of said body, and a compressed gas supply tank carried by said body and communicating with said whistle opening for producing a constant audible sound in the absence of liquid within the cavity of said body.

4. Apparatus for determining the depth of liquid-admitting openings occurring within the walls of a well casing comprising a circular plate-like body for lowering within an oil well casing and for close-fitting wiping engagement with the walls thereof, said body being provided with an upwardly opening cavity for the reception of liquids admitted through an opening occurring within an oil well casing upon passage of said body below the plane of such opening, a whistle device disposed substantially within the bottom of the cavity of said body, and a compressed gas supply tank carried by said body and communicating with said whistle device for supplying whistle-producing gas thereto, said whistle device being continuously operable in the absence of liquid within the cavity of said body and inoperable in the presence of liquid therein.

5. Apparatus for determining the depth of liquid-admitting openings occurring within the walls of a well casing comprising a circular plate-like body for lowering within an oil well casing and for close-fitting wiping engagement with the walls thereof, said body being provided with an upwardly opening cavity for the reception of liquids admitted through an opening occurring within an oil well casing upon passage of said body below the plane of such opening, a whistle device disposed substantially within the bottom of the cavity of said body, a compressed gas supply tank carried by said body and communicating with said whistle device for supplying whistle-producing gas thereto, said whistle device being continuously operable in the absence of liquid within the cavity of said body and inoperable in the presence of liquid therein, and valve means associated with said whistle device for controlling the passage of gas from said tank to said whistle.

JOHN R. LOCKETT.

REFERENCES CITED

The following references are of record in the file of this patent:

UNITED STATES PATENTS

Number	Name	Date
2,441,872	Di Renzo	May 18, 1948