US 20030139648A1

(19) United States

(12) Patent Application Publication (10) Pub. No.: US 2003/0139648 A1

Foley et al. (43) Pub. Date: Jul. 24, 2003

(54) DEVICES AND METHODS FOR PERCUTANEOUS SURGERY

(76) Inventors: **Kevin Thomas Foley**, Germantown, TN (US); **Maurice Mell Smith**, Cordova, TN (US); **John B. Clayton**, Germantown, TN (US); **Joseph Moctezuma**, Memphis, TN (US)

Correspondence Address:
Woodard, Emhardt, Naughton, Moriarty and McNett LLP
Bank One Center/Tower
111 Monument Circle, Suite 3700
Indianapolis, IN 46204-5137 (US)

(21) Appl. No.: **10/359,996**

(22) Filed: **Feb. 6, 2003**

Related U.S. Application Data

(60) Continuation of application No. 09/449,647, filed on Nov. 30, 1999, now Pat. No. 6,520,907, which is a division of application No. 08/920,991, filed on Aug. 29, 1997, now Pat. No. 6,007,487, which is a division of application No. 08/620,933, filed on Mar. 22, 1996, now Pat. No. 5,792,044.

Publication Classification

(51) **Int. Cl.**[7] **A61B 1/00**

(52) **U.S. Cl.** **600/114**

(57) **ABSTRACT**

Devices and methods for performing percutaneous spinal surgery under direct visualization and through a single cannula are shown. A device (**10**) is provided which includes an elongated cannula (**20**) having a first inner diameter (D_I) and an outer diameter (D_O) sized for percutaneous introduction into a patient. The cannula (**20**) defines a working channel (**25**) between its ends (**21, 22**) which has a second diameter (D_2) equal to the diameter (D_I) of the cannula sized for receiving a tool therethrough. An elongated viewing element (**50**) is engageable to the cannula (**20**) adjacent the working channel (**25**), preferably by a fixture (**30**). The fixture (**30**) includes a housing (**31**) attachable to the proximal end (**22**) of the cannula (**20**) that defines a working channel opening (**35**) which is in communication with the working channel (**25**). The housing (**31**) also defines an optics bore (**60**) adjacent the working channel opening (**35**). In certain embodiments, the fixture (**30**) supports the viewing element (**50**) for translation and/or rotation within the optics bore (**60**) along the longitudinal axis of the bore, and for rotation of the housing (**31**) relative to the cannula (**20**) so that the longitudinal axis of the optics bore (**60**) will rotate about the longitudinal axis of the working channel (**25**). Methods are also provided for performing spinal surgeries percutaneously with direct visualization and without the requirement for a fluid-maintained workspace.

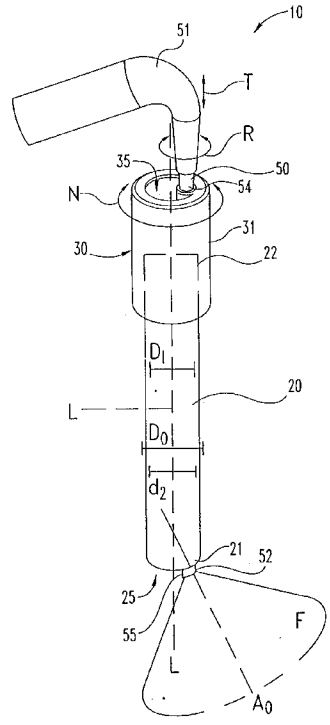

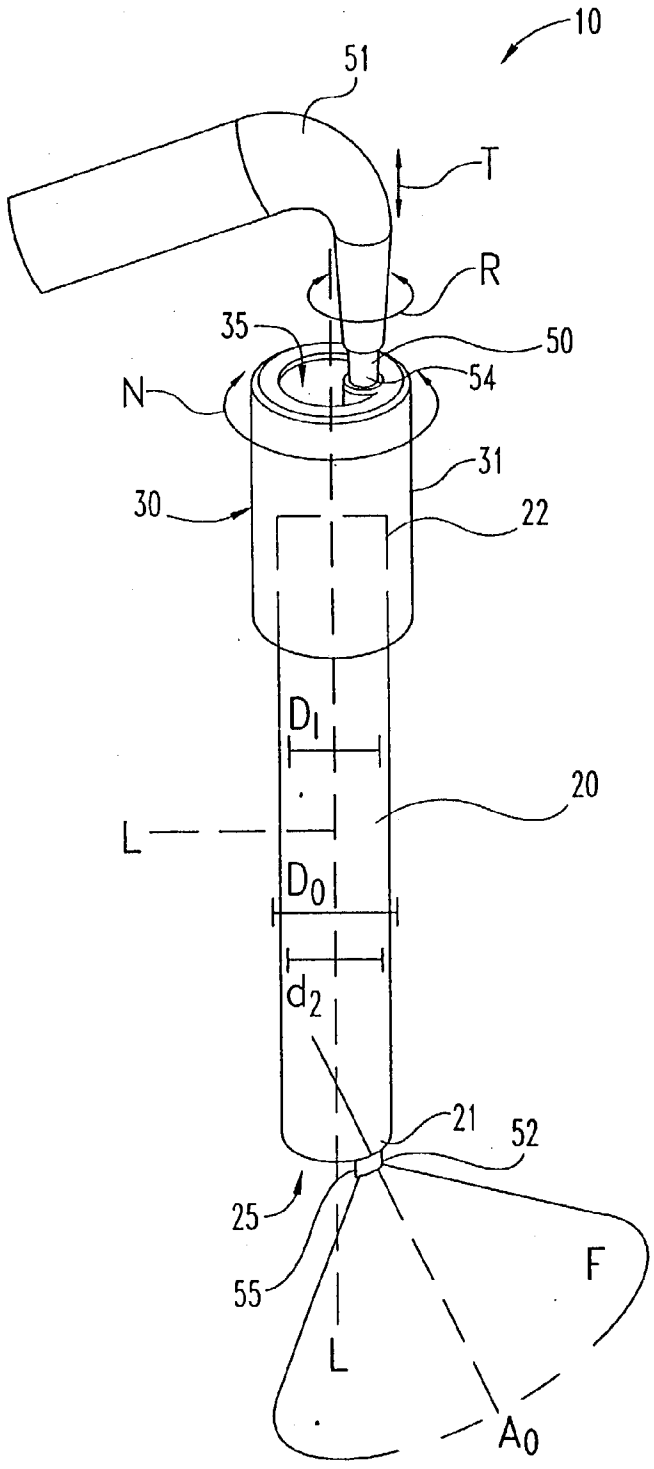

Fig. 1

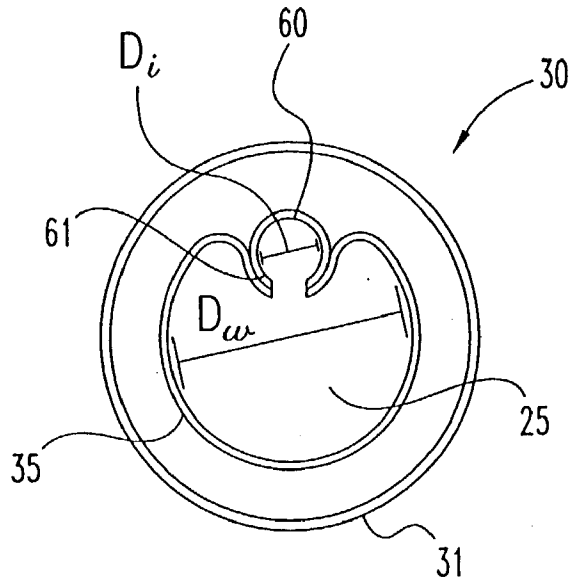

Fig. 2

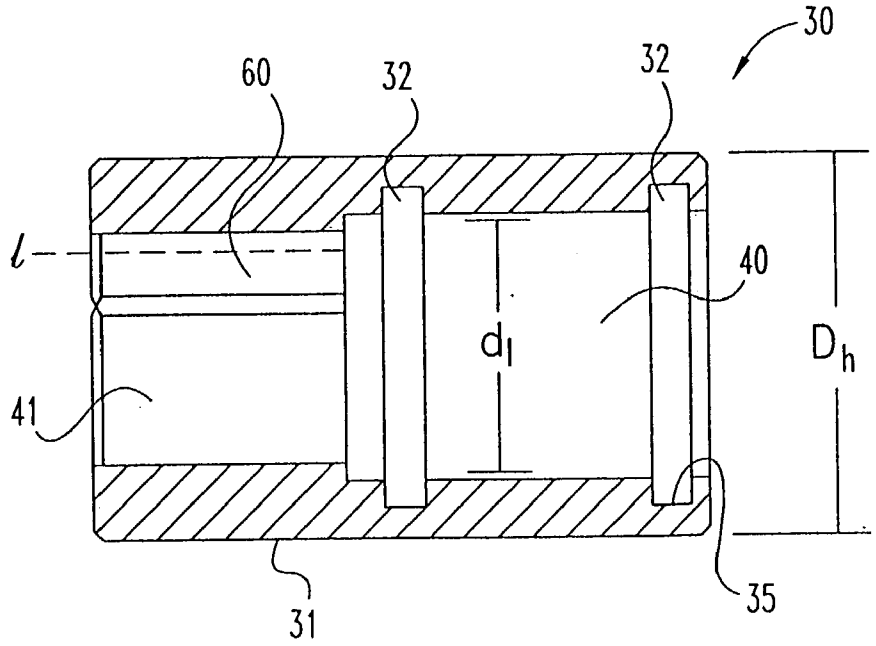

Fig. 3

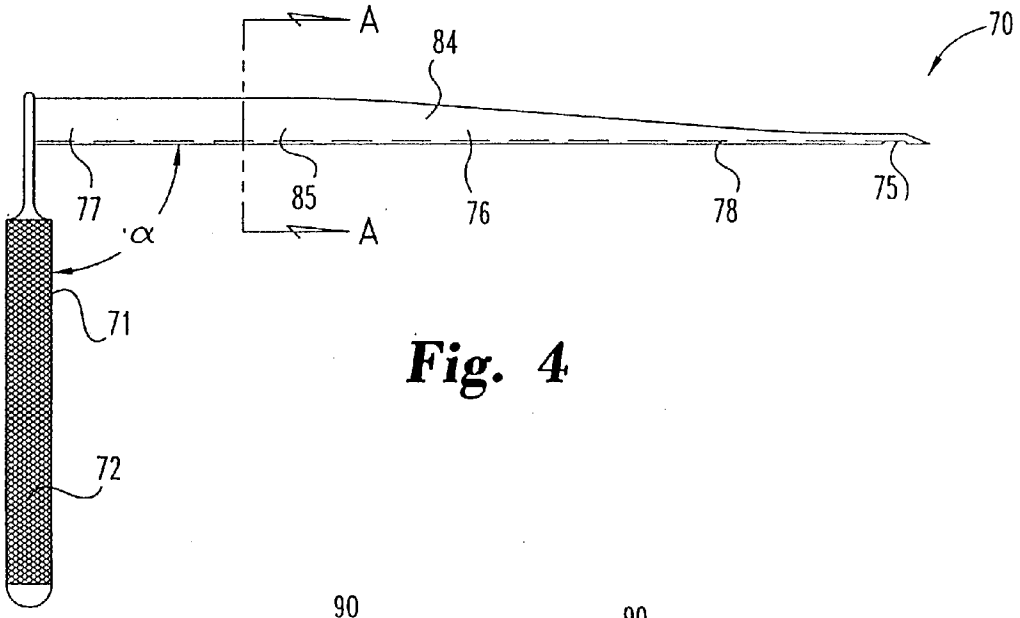

Fig. 4

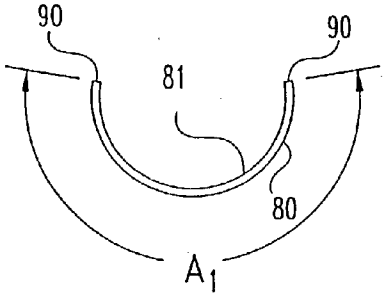

Fig. 4A

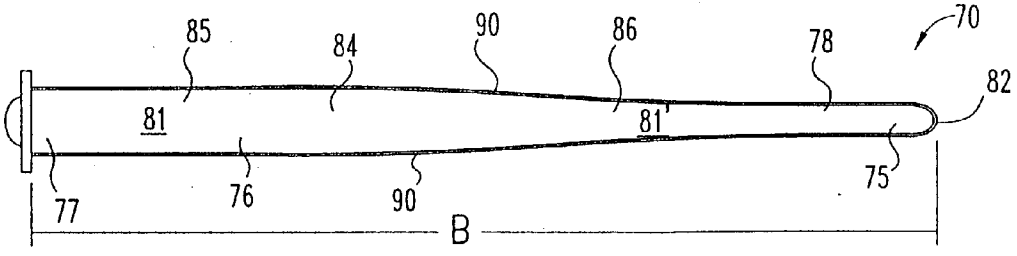

Fig. 5

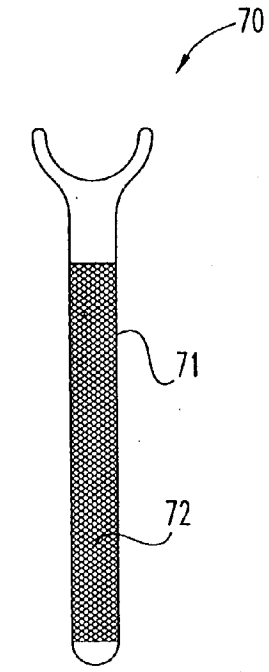

Fig. 6

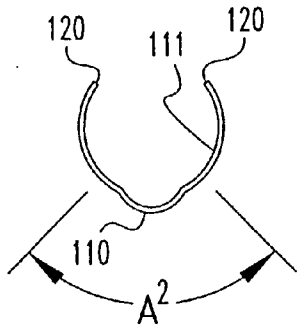

Fig. 7A

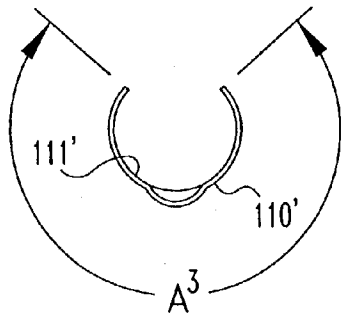

Fig. 7B

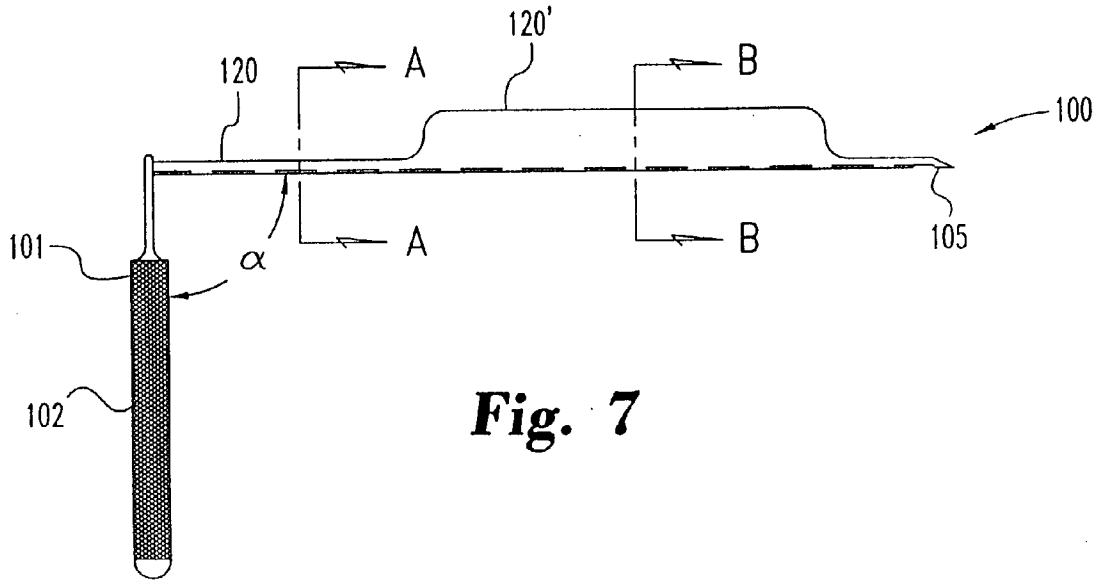

Fig. 7

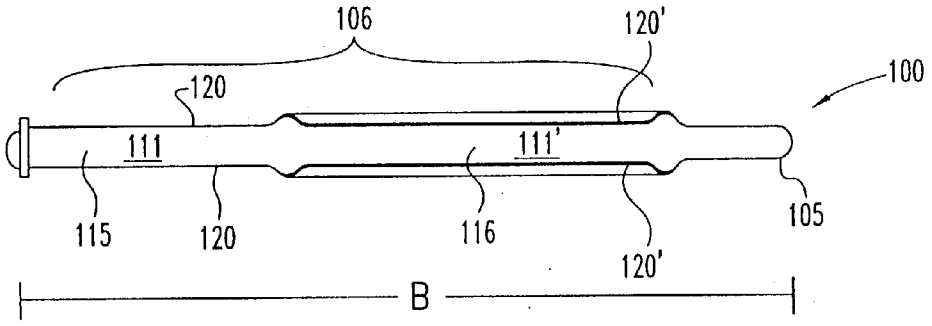
106
120'
100
120
111
111'
115
120
116
105
120'
B

Fig. 8

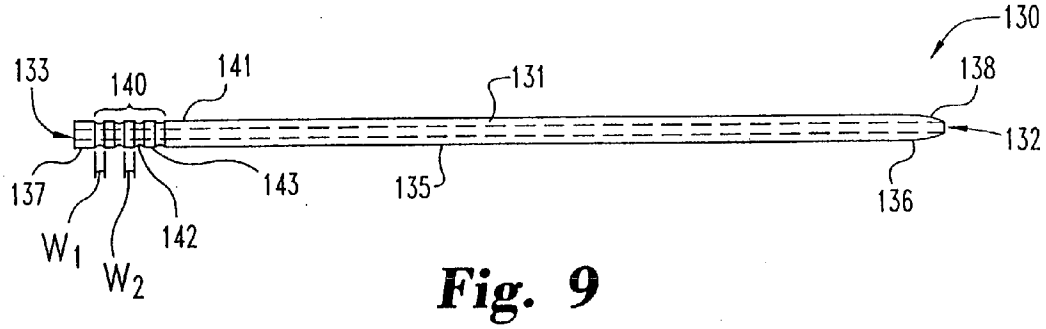
130
133
140
141
131
138
132
137
143
135
136
142
W1
W2

Fig. 9

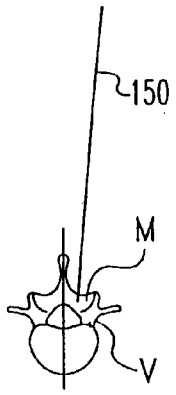

Fig. 10a

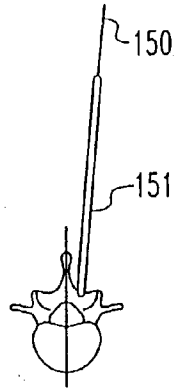

Fig. 10b

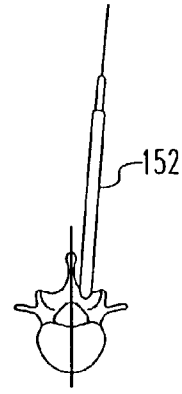

Fig. 10c

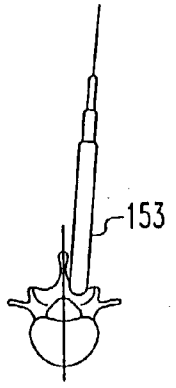

Fig. 10d

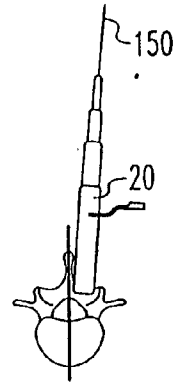

Fig. 10e

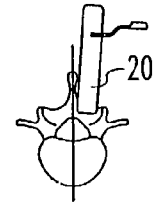

Fig. 10f

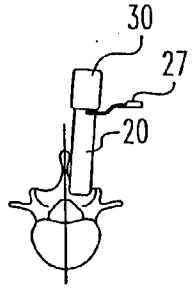

Fig. 10g

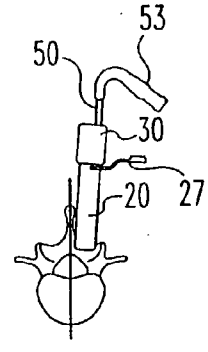

Fig. 10h

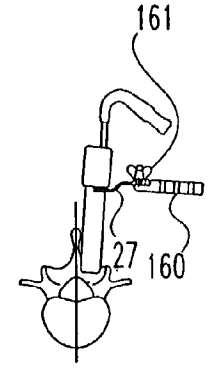

Fig. 10i

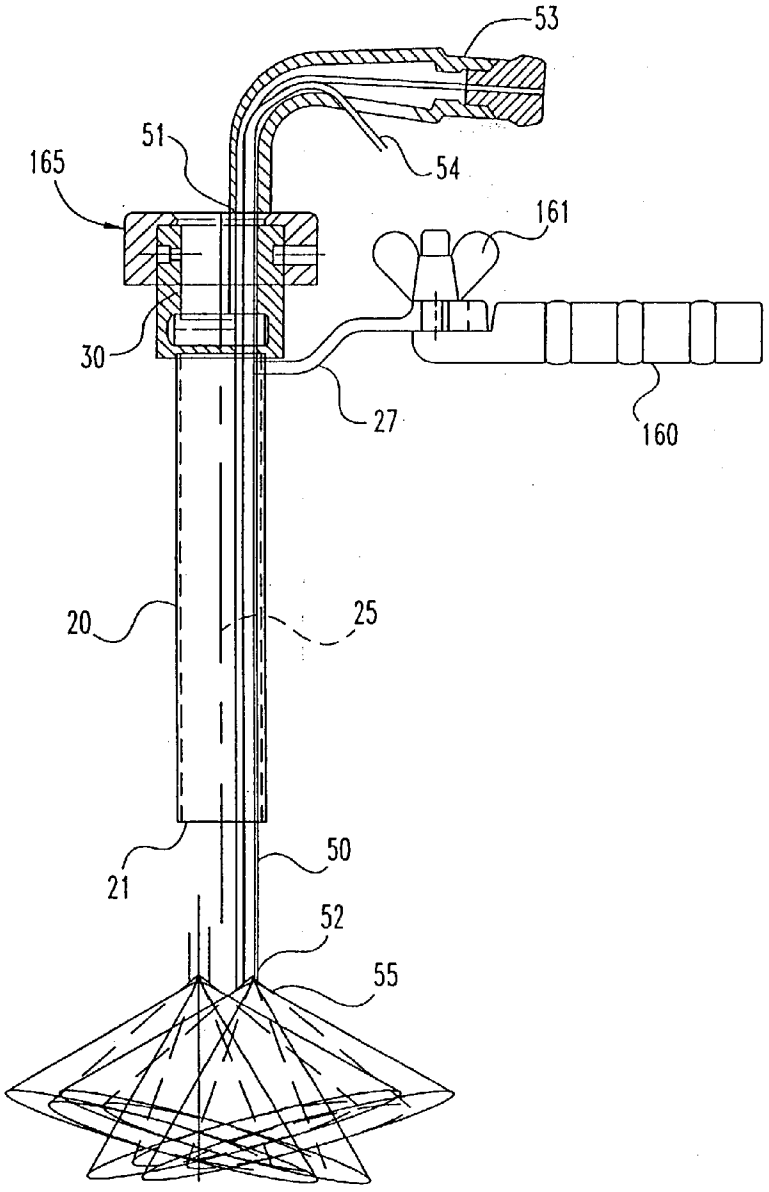

Fig. 11

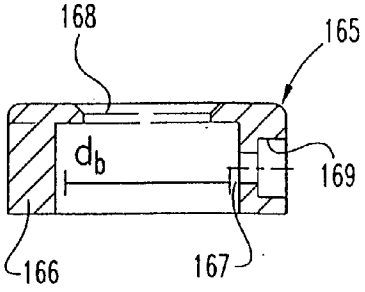

Fig. 12

DEVICES AND METHODS FOR PERCUTANEOUS SURGERY

FIELD OF THE INVENTION

[0001] The present invention relates to devices, instruments and methods for performing percutaneous surgeries, particularly at locations deep within the body. One specific application of the invention concern devices, instruments and techniques for percutaneous, minimally invasive spinal surgery. In another aspect of the invention, the percutaneous surgery is performed under direct vision at any location in the body.

BACKGROUND OF THE INVENTION

[0002] Traditional surgical procedures for pathologies located deep within the body can cause significant trauma to the intervening tissues. These open procedures often require a long incision, extensive muscle stripping, prolonged retraction of tissues, denervation and devascularization of tissue. Most of these surgeries require a recovery room time of several hours and several weeks of post-operative recovery time due to the use of general anesthesia and the destruction of tissue during the surgical procedure. In some cases, these invasive procedures lead to permanent scarring and pain that can be more severe than the pain leading to the surgical intervention.

[0003] Minimally invasive alternatives such as arthroscopic techniques reduce pain, post-operative recovery time and the destruction of healthy tissue. Orthopedic surgical patients have particularly benefitted from minimally invasive surgical techniques. The site of pathology is accessed through portals rather than through a significant incision thus preserving the integrity of the intervening tissues. These minimally invasive techniques also often require only local anesthesia. The avoidance of general anesthesia reduces post-operative recovery time and the risk of complications.

[0004] Minimally invasive surgical techniques are particularly desirable for spinal and neurosurgical applications because of the need for access to locations deep within the body and the danger of damage to vital intervening tissues. For example, a common open procedure for disc herniation, laminectomy followed by discectomy requires stripping or dissection of the major muscles of the back to expose the spine. In a posterior approach, tissue including spinal nerves and blood vessels around the dural sac, ligaments and muscle must be retracted to clear a channel from the skin to the disc. These procedures normally take at least one-two hours to perform under general anesthesia and require post-operative recovery periods of at least several weeks. In addition to the long recovery time, the destruction of tissue is a major disadvantage of open spinal procedures. This aspect of open procedures is even more invasive when the discectomy is accompanied by fusion of the adjacent vertebrae. Many patients are reluctant to seek surgery as a solution to pain caused by herniated discs and other spinal conditions because of the severe pain sometimes associated with the muscle dissection.

[0005] In order to reduce the post-operative recovery time and pain associated with spinal and other procedures, micro-surgical techniques have been developed. For example, in micro-surgical discectomies, the disc is accessed by cutting a channel from the surface of the patient's back to the disc through a small incision. An operating microscope or loupes is used to visualize the surgical field. Small diameter micro-surgical instruments are passed through the small incision and between two laminae and into the disc. The intervening tissues are disrupted less because the incision is smaller. Although these micro-surgical procedures are less invasive, they still involve some of the same complications associated with open procedures, such as injury to the nerve root and dural sac, perineural scar formation, reherniation at the surgical site and instability due to excess bone removal.

[0006] Other attempts have been made for minimally invasive procedures to correct symptomatic spinal conditions. One example is chemonucleolysis which involved the injection of an enzyme into the disc to partially dissolve the nucleus to alleviate disc herniation. Unfortunately, the enzyme, chymopapain, has been plagued by concerns about both its effectiveness and complications such as severe spasms, post-operative pain and sensitivity reactions including anaphylactic shock.

[0007] The development of percutaneous spinal procedures has yielded a major improvement in reducing recovery time and post-operative pain because they require minimal, if any, muscle dissection and they can be performed under local anesthesia. For example, U.S. Pat. No. 4,545,374 to Jacobson discloses a percutaneous lumbar discectomy using a lateral approach, preferably under fluoroscopic X-ray. This procedure is limited because it does not provide direct visualization of the discectomy site.

[0008] Other procedures have been developed which include arthroscopic visualization of the spine and intervening structures. U.S. Pat. Nos. 4,573,448 and 5,395,317 to Kambin disclose percutaneous decompression of herniated discs with a posterolateral approach. Fragments of the herniated disc are evacuated through a cannula positioned against the annulus. The '317 Kambin patent discloses a biportal procedure which involves percutaneously placing both a working cannula and a visualization cannula for an endoscope. This procedure allows simultaneous visualization and suction, irrigation and resection in disc procedures.

[0009] Unfortunately, disadvantages remain with these procedures and the accompanying tools because they are limited to a specific application or approach. For example, Jacobson, Kambin and other references require a lateral or a posterolateral approach for percutaneous discectomy. These approaches seek to avoid damage to soft tissue structures and the need for bone removal because it was thought to be impractical to cut and remove bone through a channel. However, these approaches do not address other spinal conditions which may require a mid-line approach, removal of bone or implants.

[0010] U.S. Pat. No. 5,439,464 to Shapiro discloses a method and instruments for performing arthroscopic spinal surgeries such as laminectomies and fusions with a mid-line or medial posterior approach using three cannulas. Each of the cannulas requires a separate incision. While Shapiro discloses an improvement over prior procedures which were limited to a posterolateral or lateral approach for disc work, Shapiro's procedure still suffers from many of the disadvantages of known prior percutaneous spinal surgery techniques and tools. One disadvantage of the Shapiro procedure is its requirement of a fluid working space. Another significant detriment is that the procedure requires multiple portals into the patient.

[0011] Fluid is required in these prior procedures to maintain the working space for proper function of optics fixed within a prior art cannula and inserted percutaneously. Irrigation, or the introduction of fluid into the working space, can often be logistically disadvantageous and even dangerous to the patient for several reasons. The introduction of fluid into the working space makes hemostasis more difficult and may damage surrounding tissue. Excess fluid nay dangerously dilute the sodium concentration of the patient's blood supply which can cause seizures or worse. The fluid environment can also make drilling difficult due to cavitation. The requirement for a fluid environment generally increases expenses associated with the surgery and adds to the complexity of the surgery, due in part to the relatively high volume of fluid required.

[0012] A need has remained for devices and methods that provide for percutaneous minimally invasive surgery for all applications and approaches. A need has also remained for percutaneous methods and devices which do not require a fluid-filled working space, but that can be adapted to a fluid environment is necessary.

[0013] A signficant need is present in this field for techniques and instruments that permit surgical procedures in the working space under direct vision. Procedures that reduce the number of entries into the patient are also highly desirable. The fields of spinal and neuro surgery have particularly sought devices and techniques that minimize the invasion into the patient and that are streamlined and concise in their application.

SUMMARY OF THE INVENTION

[0014] Briefly describing one aspect of the invention, there is provided devices and method for performing percutaneous procedures under direct visualization, even at locations deep within a patient. In one embodiment, a device for use in percutaneous surgery includes an elongated cannula having a first inner diameter and an outer diameter sized for percutaneous introduction into a patient. The cannula further includes a distal working end and an opposite proximal end and defines a working channel between the ends having a second diameter which is equal to the first inner diameter. The working channel is sized to receive a tool therethrough. The device also includes an elongated viewing element mounted inside the cannula adjacent the working channel. The viewing element has a first end connectable to a viewing apparatus and an opposite second end disposed adjacent the distal working end of the cannula.

[0015] In another aspect, a fixture is provided for mounting the elongated viewing element to the cannula. The fixture includes a housing attachable to the proximal end of the cannula. The housing defines a working channel opening therethrough in communication with the working channel. The working channel opening is sized to substantially correspond to the second diameter of the working channel. The housing also defines an optics bore adjacent the working channel opening. The optics bore is sized to receive the elongated viewing element therethrough.

[0016] In some embodiments, the fixture supports the viewing device for movement within the optics bore along the longitudinal axis of the bore to extend or retract the lens relative to the distal working end of the cannula. In other embodiments, the fixture supports the viewing device for rotation within the optics bore about the longitudinal axis of the bore. In some embodiments, the housing is rotatable relative to the cannula so that the longitudinal axis of the optics bore is rotatable about the longitudinal axis of the working channel.

[0017] Novel tools are also provided which are insertable into the working channel of the cannula. A tissue retractor in one embodiment includes a body and an integral working tip configured to atraumatically displace tissue as the retractor is manipulated through tissue. The body has a convex surface configured to conform to the inner cylindrical surface of the cannula and an opposite concave surface which does not obstruct the working channel or visualization of the working space. Cannulated tissue dilators are also provided which are insertable over a guidewire or another dilator as well as insertable into the working channel. In some embodiments, the tissue dilators include a tapered working end to displace tissue and a gripping portion having a number of circumferential grooves to enhance gripping and manipulation of the dilator.

[0018] According to the methods of this invention, spinal and other surgeries can be performed percutaneously with direct visualization without the requirement for a fluid-maintained working space. In another aspect of the inventive surgical techniques, all steps of a surgical procedure are conducted under direct vision through a single working channel cannula. An optical scope or viewing device is moved within the working channel and throughout the working space from a variety of angles and orientations to provide a clear view of the operative steps.

[0019] The techniques of the present invention also encompass passing multiple tools and instruments through the single working channel cannula and manipulating the instruments and tools within the working space. In one specific embodiment, a tissue retractor is provided that extends through the working channel without significantly reducing the dimensions of the channel.

[0020] It is an object of the invention to provide devices and methods for percutaneous spinal surgery for all applications and approaches. One advantage of this invention is that percutaneous procedures can be accomplished in a dry environment because a fluid working space is not required for the proper function of the optics. One benefit of this invention is that it provides instruments and methods which reduce the cost, risk, pain and recovery time associated with surgery. These and other objects, advantages and features are accomplished according to the devices and methods of the present invention.

DESCRIPTION OF THE FIGURES

[0021] **FIG. 1** is a side elevational view of a device according to this invention.

[0022] **FIG. 2** is a top elevational view of a fixture for supporting a viewing device within a cannula according to this invention.

[0023] **FIG. 3** is a side cross-sectional view of the fixture shown in **FIG. 2**.

[0024] **FIG. 4** is a side elevational view of a retractor according to one embodiment of this invention.

[0025] **FIG. 4A** is an end cross-sectional view of the retractor of **FIG. 4** taken along lines A-A.

[0026] **FIG. 5** is a top elevational view of the retractor shown in **FIG. 4**.

[0027] **FIG. 6** is an end elevational view of the retractor shown in **FIGS. 4 and 5**.

[0028] **FIG. 7** is a side elevational view of a retractor according to another embodiment of this invention.

[0029] **FIG. 7A** is an end cross-sectional view of the retractor of **FIG. 7** taken along lines A-A.

[0030] **FIG. 7B** is an end cross-sectional view of the retractor of **FIG. 7** taken along lines B-B.

[0031] **FIG. 8** is a top elevational view of the retractor shown in **FIG. 7**.

[0032] **FIG. 9** is a side elevational view of a dilator according to this invention.

[0033] **FIG. 10** (*a*)-(*i*) depicts the steps of a method according to this invention.

[0034] **FIG. 11** is a side cross-sectional view of a device according to one embodiment of this invention.

[0035] **FIG. 12** is a side cross-sectional view of an aspiration cap as shown in **FIG. 11**.

DESCRIPTION OF THE PREFERRED EMBODIMENTS

[0036] For the purposes of promoting an understanding of the principles of the invention, reference will now be made to the embodiments illustrated in the drawings and specific language will be used to describe the same. It will nevertheless be understood that no limitation of the scope of the invention is thereby intended, such alterations and further modifications in the illustrated devices and described methods, and such further applications of the principles of the invention as illustrated therein being contemplated as would normally occur to one skilled in the art to which the invention relates.

[0037] The present invention provides instruments and methods for performing percutaneous surgery, including spinal applications such as laminotomy, laminectomy, foramenotomy, facetectomy or discectomy, with a single working channel endoscope. The present inventors have discovered that many percutaneous surgeries may be performed without a fluid workspace through the use of optics which move independently of the cannula. The present invention contemplates techniques and instruments that can be implemented with or without a fluid environment.

[0038] This invention also brings the advantages of percutaneous procedures to applications that previously required open surgery. One advantage is based upon the further discovery that bone work can be performed percutaneously through a large working channel. Another advantage is realized in the use of a single portal within the patient to perform a wide range of simultaneous procedures.

[0039] According to one embodiment of the present invention, as depicted in **FIG. 1, a** device **10** is provided for use in percutaneous surgery which includes an elongated cannula **20** having a first inner diameter D_I and an outer diameter D_O sized for percutaneous introduction into a patient. The cannula **20** also-includes a distal working end **21** and an opposite proximal end **22**. The cannula defines a working channel **25** between the ends **21, 22** having a second diameter d_2 equal to the first inner diameter D_I sized for receiving a tool therethrough. The cannula has a length along its longitudinal axis L that is sized to pass through the patient from the skin to an operative site or working space. In some cases, the working space may be adjacent a vertebra or disc, or in the spinal canal.

[0040] An elongated viewing element **50** is mountable inside cannula **20** adjacent the working channel **25**. The viewing element **50** has a first end **51** connectable to a viewing apparatus, such as an eyepiece or camera, and an opposite second end **52** disposed or positionable adjacent the distal working end **21** of the cannula **20**. The particular elongated viewing element **50** is not critical to the invention. Any suitable viewing element is contemplated that creates an optical or image transmission channel. In one embodiment, the elongated viewing element **50** includes a fiber optic scope **54** and a lens **55** at the second end **52**. Preferably, the fiber optic scope includes illumination fibers and image transmission fibers (not shown). Alternatively, the viewing element may be a rigid endoscope or an endoscope having a steerable or bendable tip.

[0041] One advantage of this invention is that it provides optics which are movable relative to the cannula **20**. Because the optics are movable, it is not necessary to provide a fluid-maintained work space. The optics can be removed, cleaned and replaced while the cannula is percutaneously positioned within the patient over the working space. Any configuration which allows the optics to be movably supported adjacent the working channel **25** is contemplated. In one embodiment, shown in FIGS. **1-3**, a fixture **30** is provided for mounting the elongated viewing element **50** to the cannula **20**. Preferably, the fixture **30** includes a housing **31** attachable to the proximal end **22** of the cannula **20**. The working channel opening **35** is sized to substantially correspond to the second diameter d_2 of the working channel **25** to receive tools. The fixture **30** includes a housing **31** which defines a working channel opening **35** arranged to communicate with the working channel **25** when the fixture **30** is mounted to the cannula **20**. The working channel opening **35** is sized to receive tools therethrough for passage through the working channel **25**. In the embodiments shown in FIGS. **1-3**, the fixture **30** is configured to mount the viewing element **50** within the working channel **25**.

[0042] The housing **31** also defines an optics bore **60** adjacent the working channel opening **35**. The optics bore **60** has a longitudinal axis l that is preferably substantially parallel to the axis L of the cannula and working channel. The optics bore **60** is preferably sized to removably receive the elongated viewing element **50** therethrough. The fixture **30** preferably supports the viewing element **50** for movement within the optics bore **60** along the longitudinal axis l of the bore **60** to extend or retract the lens **55** relative to the distal working end **21** of the cannula **20**. The retractable/extendable feature of the optics of this invention provides an advantage over prior endoscopes because it eliminates the requirement for a fluid workspace. While the device **10** and its viewing element **50** can be easily used in a fluid environment, the fluid is not essential for the system to operate, contrary to prior systems. Furthermore, many of the prior

endoscopes were not suited to access certain areas because of their large diameters. For example, prior endoscopes could not access the spinal canal. However, with this invention, access to the spinal canal is not limited by the diameter of the channel or cannula. The cannula **20** can be left behind in the soft tissue or supported by the lamina while the second end **52** of the elongated viewing element **50** can be advanced into the spinal canal along with any spinal instruments which have been inserted into the working channel **25**.

[**0043**] Preferably the fixture **30** also supports the viewing element **50** for rotation within the optics bore **60** about the longitudinal axis l of the bore **60**. The lens **55** of the viewing element **50** defines an optical axis A_O. As in many endoscopes, the optical axis A_O can be offset at an angle relative to the longitudinal axis l of the optics bore **60**. This feature allows the optical axis A_o of the lens to be swept through a conical field of view F for greater visibility of the working space. The fixture **30** can further be configured so that the viewing element **50** is rotatable relative to the cannula **20**. In this embodiment, the housing **31** is rotatable relative to the cannula **20** so that the second longitudinal axis l of the optics bore **60** rotates about the longitudinal axis L of the working channel **25**. The rotatable features of this invention allows visualization of the entire working space. This feature also aids in simplifying the surgical procedure because the optics **50** and accompanying fittings can be moved out of the way of the surgeon's hands and tools passing through the working channel.

[**0044**] In one embodiment depicted in **FIG. 3**, the housing **31** defines a receiver bore **40** having an inner diameter d_I slightly larger than the outer diameter D_O of the cannula **20**. In this configuration, the proximal end **22** of the cannula **20** can be received within the receiver bore **40** so that the housing **31** can rotate about the proximal end **22** of the cannula **20**. As shown in **FIG. 3**, the housing **31** also includes an upper bore **41** which is contiguous with the working channel opening **35** and the receiver bore **40**. In one embodiment, the optics bore **60** is disposed within the upper bore **41** of the housing **31**.

[**0045**] In a preferred embodiment depicted in **FIG. 2**, the optics bore **60** is defined by a C-shaped clip **61** disposed within the upper bore **41**. Preferably, the C-shaped clip **61** is formed of a resilient material and the optics bore **60** defined by the clip **61** has an inner diameter D_i that is slightly less than the outer diameter of the elongated viewing element **50**. When the viewing element **50** is pushed into the optics bore **60** it resiliently deflects the C-shaped clip **61**. The resilience of the clip **61** provides a gripping force on the element **50** to hold it in the desired position, while still allowing the element **50** to be repositioned.

[**0046**] Alternatively, the optics bore **60** can have an inner diameter larger than the outer diameter of the viewing element. In this instance, the viewing element **50** can be supported outside the device **20**, either manually or by a separate support fixture.

[**0047**] Preferably the device **10** provides engagement means for securely yet rotatably engaging the fixture **30** to the cannula **20**. Most preferably, the fixture **30** is configured to engage a standard cannula **20**. Engagement means can be disposed between the housing **31** and the cannula **20** when the fixture **30** is mounted to the proximal end **22** of the cannula **20** for providing gripping engagement between the housing **31** and the cannula **20**. In one embodiment depicted in **FIG. 3** the engagement means includes a number of grooves **32** within the receiver bore **40** and a resilient sealing member, such as an O-ring (see **FIG. 11**) disposed in each groove **32**. The sealing members, or O-rings, disposed between the housing **31** and the outer diameter D_O of the cannula **20** rotatably secure the fixture **30** to the cannula **20**. The O-rings provide sufficient resistance to movement to hold the fixture **30** in a selectable position on the cannula. In another embodiment, the housing **31** defines a receiver bore **40** which has an inner diameter d_I which is only slightly larger than the outer diameter D_O of the cannula **20** so that the housing **31** can rotate freely about the cannula **20**.

[**0048**] The working channel **25** and the working channel opening **35** are both sized to receive a tool or instrument therethrough. Preferably, the working channel opening **35** of the housing **31** has a diameter Dw which is substantially equal to the inner diameter d_2 of the working channel **25** so that the effective diameter of the working channel is not reduced by the fixture **30**. This configuration provides a maximum amount of space for the insertion of tools into the working channel **25**. The present invention is advantageous because standard micro-surgical spinal tools can be inserted into the working channel and manipulated to perform a surgical procedure. The present invention is particularly advantageous because the working channel **25** will simultaneously accept a plurality of movable instruments. No other known prior art device has a working channel that accepts more than one movable instrument at a time through a single port. Therefore, according to this invention, an entire percutaneous surgical procedure can be performed through the working channel **25** of the device **10** under direct visualization using the viewing element **50** disposed within the optics bore **60**.

[**0049**] Although standard micro-surgical instruments may be used with the present invention, this invention also contemplates certain novel tools which capitalize on and enhance the advantages of this invention.

[**0050**] According to one preferred embodiment of the invention, a tissue retractor **70** is provided as depicted in FIGS. **4-6**. The retractor **70** is removably and rotatably insertable through the working channel **25** and the working channel opening **35** of the device **10**. The tissue retractor **70** includes a working tip **75** configured to atraumatically displace tissue as the retractor **70** is manipulated through the tissue and a body **76** having a proximal first end **77** and a distal second end **78**. The second end **78** can be integral with the working tip **75** which preferably has a blunt curved end **82**. In addition, the working tip **75** is also preferably bent or curved away from the body **76**, as shown in **FIG. 7**. The body **76** is sized to be rotatably received within the cannula **20** and has a length B from the first end **77** to the second end **78** sufficient so that the first end **77** and the working tip **75** can both extend outside the cannula **20** when the body **76** is within the cannula **20**.

[**0051**] This invention contemplates any suitable retractor for use through the working channel **25**. However, retractors such as the retractor **70** depicted in FIGS. **4-6** are preferred in which the body **76** includes a curved plate **84** that is configured to conform to the inner cylindrical surface **26** of the cannula without substantially blocking the working channel **25**. The curved plate **84** has a convex surface **80** and

an opposite concave surface **81**. In one embodiment, the curved plate **84** includes a first plate portion **85** defining a first convex surface **80** and an opposite first concave surface **81**. A second plate portion **86** is integral with the first plate portion **85** and is disposed between the first plate portion **85** and the working tip **75**. The second plate portion **86** defines a second convex surface (not shown) and an opposite second concave surface **81'**. Both the first plate portion **85** and the second plate portion **86** include opposite edges **90** extending substantially parallel to the length B of the body **76**.

[**0052**] Preferably, the curved plate **84** subtends an arc A_1 between the opposite edges **90** of at least 200 degrees, and most preferably 270 degrees. In a specific embodiment, the second plate portion **86** and specifically the second concave surface **81'** subtends an angle that decreases along the length of the retractor. Thus, in an embodiment, the second concave surface **81'** subtends an angle of about 200 degrees adjacent the first plate portion **85**, decreasing to an angle of less than about 10 degrees at end **78**.

[**0053**] An alternate embodiment of a tissue retractor according to this invention is depicted in FIGS. **8-11**. This retractor **100** has a body **106** which includes a first plate portion **115** defining a first convex surface **110** and an opposite first concave surface **111** and includes first opposite edges **120** extending substantially parallel to the length B of the body **106**. The first plate portion **115** subtends a first arc A_2 between the first opposite edges **120**. The retractor body **106** also includes a second plate portion **116** which is integral with the first plate portion **115** and is disposed between the first plate portion **115** and a working tip **105**. The second plate portion **116** defines a second convex surface **110'** and an opposite second concave surface **111'** and includes second opposite edges **120'** extending substantially parallel to the length B. The second plate portion **116** subtends a second arc A_3 between the second opposite edges **120'** that is different from the first arc A_2 in this embodiment. Preferably, the first arc A_2 subtends an angle of less than 180 degrees and the second arc A_3 subtends an angle of more than 180 degrees. Most preferably, the first arc A_2 subtends an angle of about 90 degrees and the second arc A_3 subtends an angle of about 270 degrees.

[**0054**] The retractors of this invention may be provided with means for engaging the retractors **70, 100** within the working channel **25** of the cannula **20**. For example, the convex surfaces **80, 110** can be configured to have a diameter that is greater than the diameter D_I of the inner cylindrical surface **26** of the cannula **20**. In that case, the body **76, 106** may be formed of a resilient material that is deformable to be insertable into the cannula **20** so that the convex surface **80, 110** is in contact with the inner cylindrical surface **26** of the cannula **20**. When the body **76, 106** is deformed, it exerts an outward force against the surface **26** to frictionally hold the retractor in its selected position.

[**0055**] The preferred components provided by this invention are configured so that multiple tools and instruments can be accepted and manipulated within the working channel **25** of the cannula **20**. The components are also configured so that more than one surgeon may manipulate instruments through the working channel **25** of the cannula **20** at one time. For example, one surgeon may be manipulating the retractor while another surgeon is drilling into a bone. The curvature of the body **76, 106** of the retractors **70, 100** provides more working space and increases visibility. Another feature is that the long axis of the component can be placed in the working channel **25** while a bend in the handle portion keeps hands away from the channel **25** so that more than one surgeon can work in the channel **25** and more tools can be placed in the channel **25**. The retractors shown in FIGS. **4-11** each comprise an arm **71, 101** attached to the proximal first end **77, 107** of the body **76, 106**. Preferably, as shown in FIGS. **4-11**, the arm **71, 101** is at an angle α which is less than 180 degrees from the longitudinal axis of the length L of the body **76**. Most preferably, the angle α is about 90 degrees so that the arm **71, 101** is substantially perpendicular to the length L of the body **76, 106**. Preferably, the arm **71, 101** has a gripping surface **72, 102** to facilitate manipulation of the retractor **70, 100**.

[**0056**] The present invention also provides tissue dilators usable with the device **10**. Any dilator which is insertable into the working channel **25** of the cannula **20** is contemplated; however, a preferred dilator provided by this invention is depicted in **FIG. 12**. A dilator **130** preferably includes a hollow sleeve **135** defining a channel **131**. The channel **131** allows the dilator **130** to be placed over a guidewire (not shown) or other dilators. The hollow sleeve **135** has a working end **136** defining a first opening **132** in communication with the channel **131** and an opposite end **137** defining a second opening **133**. The working end **136** is tapered to a tapered tip **138** to atraumatically displace tissue. Preferably, a gripping portion **140** is provided on the outer surface **141** of the sleeve **135** adjacent the opposite end **137**. In one embodiment, the gripping portion **140** is defined by a plurality of circumferential grooves **142** defined in the outer surface **141**. The grooves **142** are configured for manual gripping of the dilator **130** to manipulate the dilator **130** through tissue. Preferably, the grooves **142** are partially cylindrical. In the embodiment shown in **FIG. 12**, the gripping portion **140** includes a number of circumferential flats **143** each of the circumferential grooves **142**. The grooves **142** have a first width W_1 along the length of the sleeve **135** and the flats **143** have a second width W_2 **146** along the length. Preferably, the first and second widths W_1 and W_2 are substantially equal.

[**0057**] The present invention has application to a wide range of surgical procedures, and particularly spinal procedures such as laminotomy, laminectomy, foramenotomy, facetectomy and discectomy. Prior surgical techniques for each of these procedures has evolved from a grossly invasive open surgeries to the minimally invasive techniques represented by the patents of Kambin and Shapiro. However, in each of these minimally invasive techniques, multiple entries into the patient is required. Moreover, most of the prior minimally invasive techniques are readily adapted only for a posterolateral approach to the spine. The devices and instruments of the present invention have application in an inventive surgical technique that permits each of these several types of surgical procedures to be performed via a single working channel. This invention can also be used from any approach and in other regions besides the spine.

[**0058**] The steps of a spinal surgical procedure in accordance with one aspect of the present invention are depicted in **FIG. 10**. As can be readily seen from each of the depicted steps (a)-(i), the present embodiment of the invention permits a substantially mid-line or medial posterior approach to the spine. Of course, it is understood that many of the

following surgical steps can be performed from other approaches to the spine, such as posterolateral and anterior. In a first step of the technique, a guidewire **150** can be advanced through the skin and tissue into the laminae M of a vertebral body V. Preferably, a small incision is made in the skin to facilitate penetration of the guidewire through the skin. In addition, most preferably the guidewire, which may be a K-wire, is inserted under radiographic or image guided control to verify its proper positioning within the laminae L of the vertebra V. It is, of course, understood that the guidewire **150** can be positioned at virtually any location in the spine and in any portion of a vertebra V. The positioning of the guidewire is dependent upon the surgical procedure to be conducted through the working channel cannula of the present invention. Preferably, the guidewire **150** is solidly anchored into the vertebral bone, being tapped by a mallet if necessary.

[**0059**] In subsequent steps of the preferred method, a series of tissue dilators are advanced over the guidewire **150**, as depicted in steps (b)-(d) in **FIG. 10**. Alternatively, the dilators can be advanced through the incision without the aid of a guidewire, followed by blunt dissection of the underlying tissues. In the specific illustrated embodiment, a series of successively larger dilators **151**, **152** and **153** are concentrically disposed over each other and over the guidewire **150** and advanced into the body to sequentially dilate the perispinous soft tissues. Most preferably, the tissue dilators are of the type shown in **FIG. 9** of the present application. In a specific embodiment, the dilators have successively larger diameters, ranging from 5 mm, to 9 mm to 12.5 mm for the largest dilator. Other dilator sizes are contemplated depending upon the anatomical approach and upon the desired size of the working channel.

[**0060**] In the next step of the illustrated technique, the working channel cannula **20** is advanced over the largest dilator **153**, as shown in step (e), and the dilators and guidewire **150** are removed, as shown in step (f). Preferably, the working channel cannula **20** has an inner diameter D_I of 12.7 mm so that it can be easily advanced over the 12.5 mm outer diameter of the large dilator **153**. Larger working channel cannulas are contemplated depending upon the anatomical region and surgical procedure.

[**0061**] With the cannula **20** in position, a working channel is formed between the skin of the patient to a working space adjacent the spine. It is understood that the length of the cannula **20** is determined by the particular surgical operation being performed and the anatomy surrounding the working space. For instance, in the lumbar spine the distance between the laminae M of a vertebra V to the skin of the patient requires a longer cannula **20** than a similar procedure performed in the cervical spine where the vertebral body is closer to the skin. In one specific embodiment in which the cannula **20** is used in a lumbar discectomy procedure, the cannula has a length of 87 mm, although generally only about half of the length of the cannula will be situated within the patient during the procedure.

[**0062**] In accordance with the present surgical technique, the working channel cannula **20** is at least initially only supported by the soft tissue and skin of the patient. Thus, in one aspect of the preferred embodiment, the cannula **20** can include a mounting bracket **27** affixed to the outer surface of the cannula (**FIG. 10**(*f*), **FIG. 11**). This mounting bracket **27** can be fastened to a flexible support arm **160**, which can be of known design. Preferably, the flexible support arm **160** is engaged to the bracket **27** by way of a bolt and wing nut **161**, as shown in **FIG. 10**(*i*) and in more detail in **FIG. 11**, although other fasteners are also contemplated. This flexible arm **160** can be mounted on the surgical table and can be readily adjusted into a fixed position to provide firm support for the cannula **20**. The flexible arm **160** is preferred so that it can be contoured as required to stay clear of the surgical site and to allow the surgeons adequate room to manipulate the variety of tools that would be used throughout the procedure.

[**0063**] Returning to **FIG. 10**, once the cannula **20** is seated within the patient, the fixture **30** can be engaged over the proximal end of the cannula **20**. The fixture **30**, as shown in **FIGS. 2 and 3** and as described above, provides an optics bore **60** for supporting an elongated viewing element, such as element **50** shown in step h. In accordance with the invention, the viewing element **50** is advanced into the fixture **30** and supported by the optics bore **60** (**FIG. 2**). In one specific embodiment, the element **50** is most preferably a fiber optic scope, although a rod lens scope or other viewing scopes may be utilized. In the final step (i) of the procedure shown in **FIG. 10**, the flexible arm **160** is mounted to the bracket **27** to support the cannula **20** which in turn supports the optical viewing element **50**. This final position of step (i) in **FIG. 10** is shown in more detail in **FIG. 11**. The viewing element **50** can be of a variety of types, including a rigid endoscope or a flexible and steerable scope.

[**0064**] With the viewing element or scope **50** supported by the fixture **30** the surgeon can directly visualize the area beneath the working channel **25** of the cannula **20**. The surgeon can freely manipulate the viewing element **50** within the working channel **25** or beyond the distal end of the cannula into the working space. In the case of a steerable tip scope, the second end **52** of the viewing element **50**, which carries the lens **55**, can be manipulated to different positions, such as shown in **FIG. 11**. With virtually any type of viewing element, the manipulation and positioning of the scope is not limited by the working channel **25**, in contrast to prior systems.

[**0065**] Preferably, the positioning capability provided by the fixture **30** is utilized to allow extension of the lens **55** into the working space or retraction back within the cannula **20**, as depicted by the arrows T in **FIG. 1**. Also the fixture preferably accommodates rotation of the element **50** about its own axis (arrows R in **FIG. 1**) to vary the viewing angle provided by the angled lens **55**, or rotation of the entire viewing element **50** about the cannula **20** and around the circumference of the working channel **25**, as shown by the arrows N in **FIG. 1**. In this manner, the surgeon is provided with a complete and unrestricted view of the entire working space beneath the working channel **25**. In instances when the fixture **30** is rotated about the cannula **20**, the viewing orientation of the optics (i.e., left-right and up-down) is not altered so the surgeon's view of the procedure and surrounding anatomy is not disturbed.

[**0066**] Another advantage provided by the single working channel cannula **20** of the present invention, is that the cannula can be readily positioned over an appropriate target tissue or bone, to thereby move the working space as

necessary for the surgical procedure. In other words, since the working channel cannula **20** is freely situated within the patient's skin and tissue, it can be manipulated so that the working space beneath the cannula **20** is more appropriately centered over the target region of the spine. Repositioning of the cannula **20** can be performed under fluoroscopic guidance. Alternatively, the cannula may be fitted with position sensing devices, such as LEDs, to be guided stereotactically. As the cannula is being repositioned, the surgeon can also directly visualize the spine through the viewing element **50**.

[**0067**] Once the position of the cannula **20** is established and a working space is oriented over the proper target tissue, a variety of tools and instruments can be extended through the working channel **25** to accomplish the particular surgical procedure to be performed. For instance, in the case of a laminotomy, laminectomy, foramenotomy or facetectomy, a variety of rongeurs, curettes, and trephines can be extended through the working channel opening **35** (see **FIG. 2**) and through the working channel **25** of the cannula **20** (see **FIG. 11**) into the working space. It is understood that these various tools and instruments are designed to fit through the working channel. For instance, in one specific embodiment, the working channel **25** through the cannula **20** can have a maximum diameter d of 12.7 mm. However, with the viewing element **50** extending into the working channel **25**, the effective diameter is about 8 mm in the specific illustrated embodiment, although adequate space is provided within the working channel **25** around the viewing element **50** to allow a wide range of movement of the tool or instrument within the working channel. The present invention is not limited to particular sizes for the working channel and effective diameter, since the dimensions of the components will depend upon the anatomy of the surgical site and the type of procedure being performed.

[**0068**] Preferably, each of the tools and instruments used with the working channel cannula **20** are designed to minimize obstruction of the surgeon's visualization of and access to the working space at the distal end of the working channel cannula. Likewise, the instruments and tools are designed so that their actuating ends which are manipulated by the surgeon are displaced from the working channel cannula **20**. One such example is the tissue retractor shown in FIGS. **4-8**. With these retractors, the handles that are manually gripped by the surgeon are offset at about a 90 degree angle relative to the longitudinal axis of the tool itself.

[**0069**] In accordance with once aspect of the present invention, the surgical procedures conducted through the working channel cannula **20** and within the working space at the distal end of the cannula are performed "dry"—that is, without the use of irrigation fluid. In prior surgical techniques, the working space at the surgical site is fluid filled to maintain the working space and to assist in the use of the visualization optics. However, in these prior systems the visualization optics were fixed within the endoscope. In contrast, the device **10** of the present invention allows a wide range of movement for the viewing element **50** so that the lens **55** can be retracted completely within the working channel **25** of the cannula **20** to protect it from contact with the perispinous tissue or blood that may be generated at the surgical site.

[**0070**] Moreover, since the viewing element **50** is removable and replaceable, the element **50** can be completely removed from the fixture **30** so that the lens **55** can be cleaned, after which the viewing element **50** can be reinserted into the fixture and advanced back to the working space. Under these circumstances, then, the need for irrigation is less critical. This feature can be of particular value when cutting operations are being performed by a power drill. It has been found in prior surgical procedures that the use of a power drill in a fluid environment can cause turbulence or cavitation of the fluid. This turbulence can completely shroud the surgeon's view of the surgical site at least while the drill is being operated. With the present invention, the dry environment allows continuous viewing of the operation of the power drill so that the surgeon can quickly and efficiently perform the necessary cutting procedures.

[**0071**] While the present invention permits the surgeon to conduct surgical procedures in the working space under a dry environment, irrigation may be provided separately through the working channel **25**. Alternatively, the viewing device **50** itself may include a tube **54** supported by the fitting **53** through which modest amounts of fluid can be provided to keep the visualization space clear. In addition, during a discectomy, aspiration of the excised tissue is preferred, and irrigation will frequently assist in rapid removal of this tissue. Thus, separate irrigation and aspiration elements can also be inserted through the working channel **25** as required by the procedure.

[**0072**] As necessary, aspiration can be conducted directly through the working channel **25** of the cannula **20**. In one specific embodiment, an aspiration cap **165** is provided as shown in **FIGS. 11 and 12**. The cap **165** includes a body **166** which defines a mating bore **167** having an inner diameter d_b larger than the outer diameter D_h of the housing **31** of fitting **30**. A tool opening **168** is provided in communication with the mating bore **167**. When the aspiration cap **165** is mounted over the housing **31**, as shown in **FIG. 11**, the tool opening **168** communicates directly with the upper bore **41** and provides the same entry capabilities as the working channel opening **35** of the housing **31**. The aspiration cap **165** is also provided with a tube receiver bore **169** which intersects the mating bore **167**. The receiver bore **169** is configured to receive an aspiration tube through which a vacuum or suction is applied. In certain instances, the tool opening **168** may be covered while suction is applied through the tool receiver bore **169** and mating bore **167**, and ultimately through the working channel **25**. Covering the opening **168** can optimize the aspiration effect through the working channel.

[**0073**] Returning again to the surgical technique of one embodiment of the present invention, once the working channel cannula **20** and the optics **50** are in position, as depicted in **FIG. 10** step (i) and **FIG. 11**, the paraspinous tissue can be reflected using instruments as described above, and a laminectomy performed using various rongeurs, curettes and drills. As necessary, the cannula **20** can be angled to allow a greater region of bone removal, which may be necessary for access to other portions of the spinal anatomy. In some instances, access to the spinal canal and the posterior medial aspects of the disc annulus may require cutting a portion of the vertebral bone that is greater than the inner diameter of the working channel **25**. Thus, some manipulation of the cannula **20** may be necessary to permit removal of a greater portion of bone. In other operations,

multi-level laminectomies or foramenotomies may be necessary. In this instance, these multi-level procedures can be conducted by sequentially inserting the working channel cannula **20** through several small cutaneous incisions along the spinal mid-line. Alternatively, several working channel cannulas **20** can be placed at each of the small cutaneous incisions to perform the multi-level bone removal procedures.

[**0074**] Again, in accordance with the preferred illustrated surgical technique, an opening is cut into the laminae M of the vertebra V providing direct visual access to the spinal canal itself. As necessary, tissue surrounding the spinal nerve root can be removed utilizing micro surgical knives and curettes. Once the spinal nerve root is exposed, a retractor, such as the retractors shown in FIGS. **4-8**, can be used to gently move and hold the nerve root outside the working space. In one important aspect of the two retractors **70**, **100**, the portion of the retractor passing through the working channel **25** generally conforms to the inner surface of the cannula **20** so that the working channel **25** is not disrupted by the retractor tool. Specifically, the effective diameter within the working channel **25** is reduced only by the thickness of the curved plates **84**, **114** of the retractors **70**, **100**. In one specific embodiment, this thickness is about 0.3 mm, so it can be seen that the tissue retractors do not significantly reduce the space available in the working channel **25** for insertion of other tools and instruments.

[**0075**] With the tissue retractor in place within the working channel **25**, bone within the spinal canal, such as may occur in a burst fracture, can be removed with a curette or a high speed drill. Alternatively, the fractured bone may be impacted back into the vertebral body with a bone impactor. At this point, if the spinal procedure to be performed is the removal of epidural spinal tumors, the tumors can be resected utilizing various micro-surgical instruments. In other procedures, the dura may be opened and the intradural pathology may be approached with micro-surgical instruments passing through the working channel cannula **20**. In accordance with the specific illustrated technique, with the nerve root retracted posterior medial disc herniations can be readily excised directly at the site of the herniation.

[**0076**] One important feature of the present invention is achieved by the large diameter of the working channel **25** in the cannula **20**. This large diameter allows the surgeon or surgeons conducting the surgical procedure to introduce a plurality of instruments or tools into the working space. For example, as described above, a tissue retractor and discectomy instruments can be simultaneously extended through the working channel. In that illustrated embodiment, the discectomy instruments could include a trephine for boring a hole through the disc annulus and a powered tissue cutter for excising the herniated disc nucleus. Likewise, the present invention contemplates the simultaneous introduction of other types of instruments or tools as may be dictated by the particular surgical procedure to be performed. For example, an appropriately sized curette and a rongeur may be simultaneously extended through the working channel into the working space. Since all operations being conducted in the working space are under direct visualization through the viewing element **50**, the surgeon can readily manipulate each of the instruments to perform tissue removal and bone cutting operations, without having to remove one tool and insert the other. In addition, since the surgical procedures can be conducted without the necessity of irrigation fluid, the surgeon has a clear view through the working space of the target tissue. Furthermore, aspects of the invention which permit a wide range of motion to the viewing element **50** allow the surgeon to clearly visualize the target tissue and clearly observe the surgical procedures being conducted in the working space.

[**0077**] The surgeon can capitalize on the same advantages in conducting a wide range of procedures at a wide range of locations in the human body. For example, facetectomies could be conducted through the working channel by simply orienting the working channel cannula **20** over the particular facet joints. The insertion of vertebral fixation elements can also be accomplished through the device **10**. In this type of procedure, an incision can be made in the skin posterior to the location of the vertebra at which the fixation element is to be implanted. Implementing the steps shown in **FIG. 10**, the cannula **20** can be positioned through the incision and tissue directly above the particular location on the vertebra to be instrumented. With the optics extending through the working channel, an insertion tool holding the vertebral fixation element can be projected through the cannula **20** and manipulated at the vertebra. In one specific embodiment, the fixation element can be a bone screw. The working channel **25** has a diameter that is large enough to accept most bone screws and their associated insertion tools. In many instances, the location of the bone screw within the vertebra is critical, so identification of the position of the cannula **20** over the bony site is necessary. As mentioned above, this position can be verified fluoroscopically or using stereotactic technology.

[**0078**] In many prior procedures, cannulated bone screws are driven into the vertebra along K-wires. The present invention eliminates the need for the K-wire and for a cannulated screw. The working channel itself can effectively operate as a positioning guide, once the cannula **20** is properly oriented with respect to the vertebra. Moreover, the device **10** allows insertion of the bone screw into the vertebra to be conducted under direct vision. The surgeon can then readily verify that the screw is passing into the vertebra properly. This can be particularly important for bone screws being threaded into the pedicle of a vertebra. The working channel cannula **20** can be used to directly insert a self-tapping bone screw into the pedicle, or can accept a variety of tools to prepare a threaded bore within the pedicle to receive a bone screw.

[**0079**] The device **10** can also be used to prepare a site for fusion of two adjacent vertebrae, and for implantation of a fusion device or material. For example, in one surgical technique, an incision can be made in the skin posterior to a particular disc space to be fused. The incision can be made anteriorly, posteriorly or posterior laterally. If the incision is made anteriorly for anterior insertion of the working channel, it is anticipated that care will be taken to retract tissues, muscle and organs that may follow the path of the incision to the disc space. However, the device **10** of the present invention allows this tissue retraction to occur under direct vision so that the surgeon can easily and accurately guide the cannula **20** to the disc space without fear of injury to the surrounding tissue. As the tissue beneath the skin is successively excised or retracted, the working channel cannula **20** can be progressively advanced toward the anticipated working space adjacent the vertebral disc. Again under direct

vision, the disc space can be prepared for implantation of fusion materials or a fusion device. Typically, this preparation includes preparing an opening in the disc annulus, and excising all or part of the disc nucleus through this opening.

[0080] In subsequent steps, a bore is cut through the disc annulus and into the endplates of the adjacent vertebrae. A fusion device, such as a bone dowel, a push-in implant or a threaded implant can then be advanced through the working channel of device **10** and into the prepared bore at the subject disc space. In some instances, the preparatory steps involve preparing the vertebral endplates by reducing the endplates to bleeding bone. In this instance, some aspiration and irrigation may be beneficial. All of these procedures can be conducted by tools and instruments extending through the working channel cannula **20** and under direct vision from the viewing element **50**.

[0081] In some instances, graft material is simply placed within the prepared bore. This graft material can also be passed through the working channel cannula **20** into the disc space location. In other procedures, graft material or bone chips are positioned across posterior aspects of the spine. Again, this procedure can be conducted through the working channel cannula particularly given the capability of the cannula to be moved to different angles from a single incision site in the skin.

[0082] The present invention provides instruments and techniques for conducting a variety of surgical procedures. In the illustrated embodiments, these procedures are conducted on the spine. However, the same devices and techniques can be used at other places in the body. For example, an appropriately sized working channel device **10** can be used to remove lesions in the brain. The present invention has particular value for percutaneous procedures where minimal invasion into the patient is desirable and where accurate manipulation of tools and instruments at the surgical site is required. While the preferred embodiments illustrated above concern spinal procedures, the present invention and techniques can be used throughout the body, such as in the cranial cavity, the pituitary regions, the gastro-intestinal tract, etc. The ability to reposition the viewing optics as required to visualize the surgical site allows for much greater accuracy and control of the surgical procedure. The present invention allows the use of but a single entry into the patient which greatly reduces the risk associated with open surgery or multiple invasions through the patient's skin.

[0083] While the invention has been illustrated and described in detail in the drawings and foregoing description, the same is to be considered as illustrative and not restrictive in character, it being understood that only the preferred embodiment has been shown and described and that all changes and modifications that come within the spirit of the invention are desired to be protected.

What is claimed:

1. A device for use in percutaneous spinal surgery, comprising:

an elongated cannula having a first inner diameter and an outer diameter sized for percutaneous introduction into a patient, said cannula further including a distal working end and an opposite proximal end, said cannula defining a working channel between said ends having a second diameter equal to said first inner diameter sized for receiving a tool therethrough; and

an elongated viewing element mounted inside said cannula adjacent said working channel, said viewing element having a first end connectable to a viewing apparatus and an opposite second end disposed adjacent said distal working end of said cannula.

2. The device of claim 1 wherein said second inner diameter is sized to simultaneously receive a plurality of tools therethrough.

3. The device of claim 1, wherein said elongated viewing element includes a lens at said second end and an image transmission channel extending therefrom.

4. The device of claim 3, wherein said elongated viewing element is a fiber-optic cable having illumination fibers and image transmission fibers.

5. The device of claim 1, further comprising a fixture for mounting said elongated viewing element to said cannula.

6. The device of claim 5, wherein said fixture is configured to mount said viewing element within said working channel.

7. The device of claim 5, wherein said fixture includes:

a housing attached to the proximal end of the cannula, said housing defining a working channel opening therethrough in communication with the working channel, said working channel opening sized to substantially correspond to said second diameter of said working channel to receive a tool therethrough;

said housing further defining an optics bore adjacent said working channel opening, said optics bore sized to receive said elongated viewing element therethrough.

8. A device for use in percutaneous spinal surgery, comprising:

an elongated cannula sized for percutaneous introduction into a patient having a distal working end and an opposite proximal end and defining a working channel between said ends, said working channel having an inner diameter sized to receive a tool therethrough;

an elongated viewing device having a first end connectable to a viewing apparatus and a second end including a lens positionable adjacent said working end of said cannula; and

a fixture connected to said proximal end of said cannula adjacent to said working channel and defining an optics bore having a longitudinal axis, said optics bore sized to removably receive said elongated viewing device therethrough, and said fixture supporting said viewing device for movement within said optics bore along the longitudinal axis of said bore to extend or retract said lens relative to said distal working end of said cannula.

9. The device of claim 8 wherein said elongated viewing element includes a lens at said second end and an image transmission channel extending therefrom.

10. The device of claim 9, wherein said lens defines an optical axis, said optical axis being offset at an angle relative to said longitudinal axis of said optics bore.

11. The device of claim 9, wherein elongated viewing element is a fiber-optic cable having illumination fibers and image transmission fibers.

12. The device of claim 8, wherein said fixture is configured to support said viewing element within said working channel.

13. The device of claim 8, wherein said fixture includes:

a housing attached to the proximal end of the cannula, said housing defining a working channel opening therethrough in communication with the working channel, said working channel opening sized to substantially correspond to said second diameter of said working channel to receive a tool therethrough;

said housing further defining said optics bore adjacent said working channel opening.

14. A device for use in percutaneous spinal surgery, comprising:

an elongated cannula having a distal working end and an opposite proximal end and defining a working channel between said ends, said working channel having an inner diameter sized to receive a tool therethrough;

an elongated viewing device having a first end connectable to a viewing apparatus and a second end including a lens positionable adjacent said working end of said cannula; and

a fixture connected to said proximal end of said cannula adjacent to said working channel and defining an optics bore having a longitudinal axis, said optics bore sized to removably receive said elongated viewing device therethrough, and said fixture supporting said viewing device for rotation within said optics bore about the longitudinal axis of said bore.

15. The device of claim 14 wherein said elongated viewing element includes a lens at said second end and an image transmission channel extending therefrom.

16. The device of claim 15, wherein said lens defines an optical axis, said optical axis being offset at an angle relative to said longitudinal axis of said optics bore.

17. The device of claim 15, wherein said elongated viewing element is a fiber-optic cable having illumination fibers and image transmission fibers.

18. The device of claim 14, wherein said fixture is configured to support said viewing element within said working channel.

19. The device of claim 14, wherein said fixture includes:

a housing attached to the proximal end of the cannula, said housing defining a working channel opening therethrough in communication with the working channel, said working channel opening sized to substantially correspond to said second diameter of said working channel to receive a tool therethrough;

said housing further defining said optics bore adjacent said working channel opening.

20. The device of claim 14, wherein said fixture further supports said elongated viewing device for movement within said optics bore along said longitudinal axis of said bore.

21. A device for use in percutaneous spinal surgery comprising:

an elongated cannula having a distal working end and an opposite proximal end and defining a working channel between said ends, said working channel having a first longitudinal axis and ana inner diameter sized to receive a tool therethrough; and

a fixture mounted to said proximal end of said cannula, said fixture including a housing defining a working channel opening in communication with said working channel of said cannula and an optics bore for receiving an elongated viewing device therethrough in communication with said working channel, said optics bore having a second longitudinal axis substantially parallel to said first longitudinal axis, said housing being rotatable relative to said cannula so that said second longitudinal axis of said optics bore rotates about said first longitudinal axis of said working channel.

22. The device of claim 21, further comprising an elongated viewing device disposed within said optics bore, said viewing device having a first end connectable to a viewing apparatus and a second end including a lens positionable adjacent said working end of said elongated cannula.

23. The device of claim 21, wherein:

said cannula has an outer diameter; and

said housing defines a receiving bore having an inner diameter slightly larger than said out diameter of said cannula, wherein said proximal end of said cannula is received within said receiver bore so that said housing can rotate about said proximal end of said cannula.

24. The device of claim 23, wherein said housing further includes an upper bore contiguous with said working channel opening and in communication with said receiver bore, said optics bore being disposed within said upper bore of said housing.

25. The device of claim 21, wherein said optics bore is defined by a C-shaped clip.

26. The device of claim 25, wherein said C-shaped clip is formed of a resilient material and said optics bore defined by said clip has an inner diameter that is slightly less than an outer diameter of said elongated viewing device so that said viewing device resiliently deflects said C-shaped clip when said viewing device is disposed within said optics bore.

27. The device of claim 23, wherein said housing further defines a number of grooves in said receiver bore.

28. The device of claim 27, further comprising sealing members disposed in each of said number of grooves, said sealing members disposed between said housing and said outer diameter of said cannula.

29. The device of claim 21 wherein said working channel opening has a diameter substantially equal to said inner diameter of said working channel.

30. The device of claim 21 wherein said fixture includes engagement means, disposed between said housing and said cannula when said fixture is mounted to said proximal end of said cannula, for providing a gripping engagement between said housing and said cannula.

31. The device of claim 30, wherein said engagement means includes a number of resilient rings disposed between said housing and said cannula.

32. A device for supporting an elongated viewing device within a cannula defining a working channel, comprising:

a fixture mountable to said proximal end of the cannula, said fixture including a housing defining a working channel opening arranged to communicate with the working channel when said fixture is mounted to the cannula, said working channel opening sized to receive

tools therethrough, and said housing further defining an optics bore for receiving an elongated viewing device therethrough and arranged so that the viewing device received within said optics bore will extend into the working channel of the cannula when said fixture is mounted to the cannula.

33. The device of claim 32, in which the cannula defines a first longitudinal axis, wherein said optics bore defines a second longitudinal axis substantially parallel to the first longitudinal axis when said fixture is mounted on the cannula, said housing being rotatable relative to said cannula so that said second longitudinal axis of said optics bore rotates about the first longitudinal axis of the cannula.

34. The device of claim 32 in which the cannula has an outer diameter, wherein said housing defines a receiving bore having an inner diameter slightly larger than the outer diameter of the cannula, so that said housing can rotate about the cannula.

35. The device of claim 34, wherein said housing further includes an upper bore contiguous with said working channel opening and in communication with said receiving bore, said optics bore being disposed within said upper bore of said housing.

36. The device of claim 35, wherein said optics bore is defined by a C-shaped clip.

37. The device of claim 36, wherein said C-shaped clip is formed of a resilient material and said optics bore defined by said clip has an inner diameter that is slightly less than an outer diameter of the elongated viewing device so that the viewing device resiliently deflects said C-shaped clip when the viewing device is disposed within said optics bore.

38. The device of claim 34, wherein said housing further defines a number of grooves in said receiver bore.

39. The device of claim 38, further comprising O-rings disposed in each of said number of grooves, said O-rings disposed between said housing and the outer diameter of the cannula when the cannula is disposed within said receiver bore.

40. A tissue retractor for use in percutaneous surgery through a cannula having an inner cylindrical surface, said retractor comprising:

a working tip configured to atraumatically displace tissue as the retractor is manipulated through the tissue; and

a body having a proximal first end and a distal second end, said second end being integral with said working tip, said body having a convex surface configured to conform to the inner cylindrical surface of the cannula when said tissue retractor is disposed within the cannula, said body sized to be rotatable received within the cannula and having a length from a said first end to a said second end sufficient so that said first end and said working tip can be outside the cannula when said body is within the cannula.

41. The tissue retractor of claim 40, wherein said working tip has a blunt curved end.

42. The tissue retractor of claim 40, wherein said body includes a curved plate defining said convex surface and an opposite concave surface.

43. The tissue retractor of claim 42, wherein said curved plate includes opposite edges extending substantially parallel to said length of said body, said curved plate subtending an arc between said opposite edges of at least 200 degrees.

44. The tissue retractor of claim 43, wherein said curved plate subtends an arc between said opposite edges of about 270 degrees.

45. The tissue retractor of claim 40, wherein said body includes:

a first plate portion defining a first convex surface and an opposite first concave surface and including first opposite edges extending substantially parallel to said length of said body, said first plate portion subtending a first arc between said first opposite edges; and

a second plate portion integral with said first plate portion and disposed between said first plate portion and said working tip, said second plate portion defining a second convex surface and an opposite second concave surface and including second opposite edges extending substantially parallel to said length, said second plate portion subtending a second arc between said second opposite edges that is different from said first arc.

46. The tissue retractor of claim 45, wherein said first arc subtends an angle of less then 180 degrees and said second ar subtends an angle of more than 180 degrees.

47. The tissue retractor of claim 46, wherein said first arc subtends an angle of about 90 degrees and said second arc subtends an angle of about 270 degrees.

48. The tissue retractor of claim 45, wherein said second arc subtends an angle that decreases along said length toward said working tip.

49. The tissue retractor of claim 48, wherein said second arc subtends an angle of about 200 degrees adjacent said first plate portion decreasing to an angle of less than 10 degrees adjacent said working tip.

50. The tissue retractor of claim 49, wherein said first arc subtends an angle of about 200 degrees.

51. The tissue retractor of claim 40, wherein said convex surface of said body is at a diameter that is greater than the diameter of the inner cylindrical surface of the cannula, said body being resiliently deformable to be insertable into the cannula with said convex surface in contact with the inner cylindrical surface of the cannula.

52. The tissue retractor of claim 40, further comprising an arm attached to said proximal first end of said body, said arm having a gripping surface to facilitate manipulation of said tissue retractor.

53. The tissue retractor of claim 52, wherein said arm is substantially perpendicular to said length of said body.

54. A tissue dilator, comprising:

a sleeve having a tapered working end and an opposite end, said working end configured to displace tissue; and

a gripping portion on an outer surface of said sleeve adjacent said opposite end, said gripping portion defining a plurality of circumferential grooves configured for manually gripping the dilator to manipulate the dilator within tissue.

55. A method for performing a surgical procedure at a location in a patient's body, comprising:

inserting a cannula into a patient through skin and tissue to create a working channel;

creating a working space in communication with the working channel and adjacent the location in the patient's body;

inserting optics through the working channel to the working space;

extending a first tool through the working channel to the working space; and

manipulating the first tool through the working channel to perform a surgical procedure on the location in the working space under direct vision from the optics and without directing irrigation fluid to the location.

56. The method of claim 55 wherein the tool is a power drill and the surgical procedure is drilling through bone or tissue at the location.

57. The method of claim 55, further comprising:

extending the optics through the working channel beyond the end of the working channel adjacent the working space for direct visualization of the working space and manipulating the tool.

58. The method of claim 55, further comprising:

removably inserting a second tool through the working channel simultaneous with the first tool; and

manipulating the second tool to perform a function at the location.

59. The method of claim 58 further comprising:

inserting a guidewire into a patient through skin and tissue to the location;

inserting a cannulated dilator over the guidewire and through the skin and tissue to the location wherein the inserting the cannula includes inserting the cannula over the dilator;

removing the guidewire after inserting the dilator; and

removing the dilator after inserting the cannula.

60. A method for performing a surgical procedure at a location on the spine, comprising:

inserting a cannula into a patient through skin and tissue to create a working channel;

creating a working space in communication with the working channel and adjacent the location on the spine;

extending a tool through the working channel beyond the end of the working channel and manipulating the tool in the working space; and

extending optics through the working channel beyond the end of the working channel adjacent the working space to directly visualize the working space and manipulation of the tool.

61. A method for performing a surgical procedure at a location on the spine, comprising:

inserting a cannula into a patient through skin and tissue to create a working channel;

creating a working space in communication with the working channel and adjacent the location on the spine;

removably inserting a first tool through the working channel;

manipulating the first tool to perform a function at the location;

removably inserting a second tool through the working channel simultaneous with the first tool; and

manipulating the second tool to perform a function at the location.

62. The method of claim 61 wherein:

the first tool is a tissue retractor; and

the step of manipulating the first tool includes manipulating the tissue retractor to retract tissue to maintain the working space.

63. A method for performing a discectomy at a subject vertebral level on the spine, comprising:

creating an incision in the skin substantially directly posterior to the subject vertebral level;

creating a bore through the lamina at a posterior medial position on the spine;

mounting a cannula through the incision at the bore in the lamina to create a working channel;

inserting optics through the cannula to directly visualize the location on the spine underneath the working channel;

extending a retractor through the working channel to retract tissue to create a path to the spinal disc;

extending the optics through the working channel an d path to the spinal disc; and

extending and manipulating discectomy instruments through the working channel to the disc to perform a discectomy under direct vision by the optics.

64. The method of claim 63 wherein the creating a bore includes conducting a laminectomy comprising the steps of:

inserting a cannula into the incision and through tissue to the lamina to define a working channel;

extending optics through the working channel to directly visualize the lamina; and

extending a bone cutting tool through the working channel and manipulating the tool to perform a laminectomy under direct vision from the optics.

65. A method for performing a laminectomy, comprising:

creating an incision in the skin substantially directly posterior to the subject vertebral level;

inserting a cannula into the incision and through tissue to the lamina to define a working channel;

extending optics through the working channel to directly visualize the lamina; and

extending a bone cutting tool through the working channel and manipulating the tool to perform a laminectomy under direct vision from the optics.

66. A method for implanting a vertebral fixation element, comprising:

making an incision in the skin to provide access to the location on the vertebra at which the fixation element is to be implanted;

inserting a cannula into the incision and through tissue to the location to define a working channel;

inserting optics through the cannula to directly visualize the location;

extending an insertion tool supporting the vertebral fixation element through the working channel to the location under direct vision; and

manipulating the insertion tool to implant the fixation element at the location under direct vision from the optics.

* * * * *