Office de la Propriété Intellectuelle du Canada
Un organisme d'Industrie Canada

Canadian Intellectual Property Office
An agency of Industry Canada

CA 2541748 A1 2007/10/04

(21) 2 541 748

(12) DEMANDE DE BREVET CANADIEN
CANADIAN PATENT APPLICATION

(13) A1

(22) Date de dépôt/Filing Date: 2006/04/04

(41) Mise à la disp. pub./Open to Public Insp.: 2007/10/04

(51) Cl.Int./Int.Cl. *E21B 23/03* (2006.01)

(71) Demandeur/Applicant:
OIL STATES ENERGY SERVICES, INC., US

(72) Inventeur/Inventor:
DALLAS, L. MURRAY, US

(74) Agent: WOOD, MAX R.

(54) Titre : UN RACCORD DE TRANSITION DE TUBAGE AFIN DE FACILITER LA COMPLETION, LA RECOMPLETION ET LE RECONDITIONNEMENT DES PUITS

(54) Title: A CASING TRANSITION NIPPLE AND METHOD OF CASING A WELL TO FACILITATE WELL COMPLETION, RE-COMPLETION AND WORKOVER

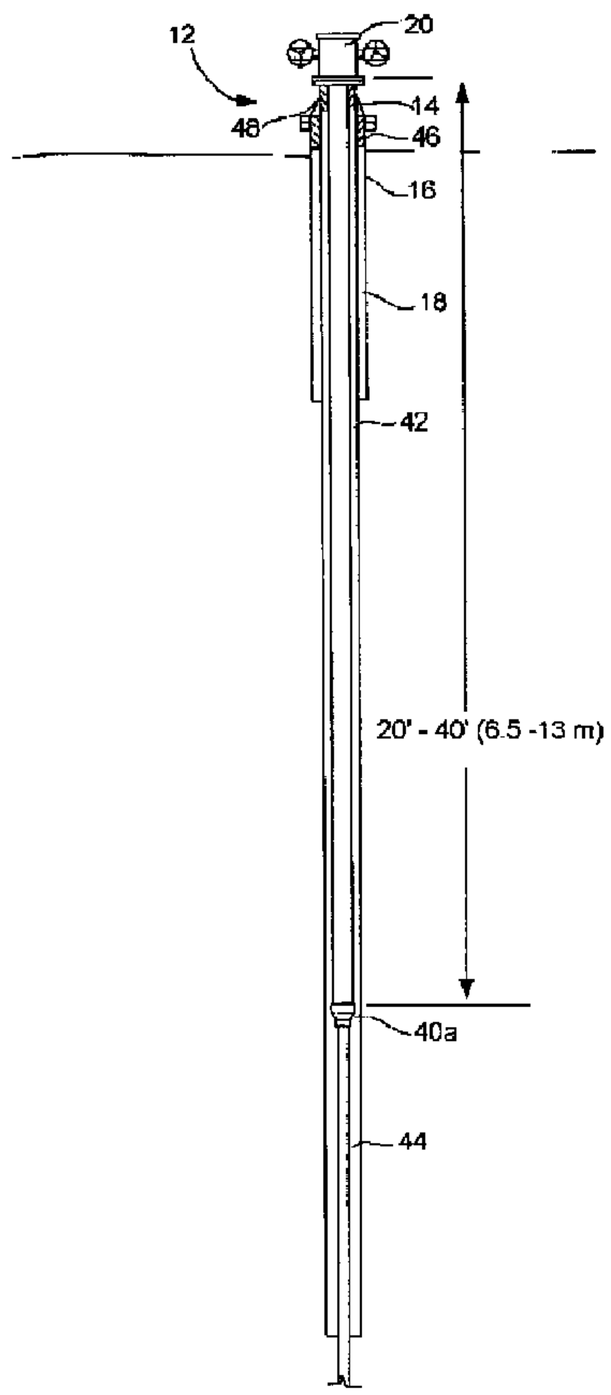

(57) Abrégé/Abstract:
A casing transition nipple and method of casing a well facilitates well completion, re-completion and workover while increasing safety and reducing expense. The casing transition nipple provides a connection between a large diameter production casing joint

(57) Abrégé(suite)/Abstract(continued):
suspended by a wellhead and a standard production casing string. The large diameter production casing joint permits long downhole tool strings to be lubricated into the well without leaving a high lubricator profile and reduces the cost of performing many other well completion, re-completion and workover procedures.

ABSTRACT Of The Disclosure

A casing transition nipple and method of casing a well facilitates well completion, re-completion and workover while increasing safety and reducing expense. The casing transition nipple provides a connection between a large diameter production casing joint suspended by a wellhead and a standard production casing string. The large diameter production casing joint permits long downhole tool strings to be lubricated into the well without leaving a high lubricator profile and reduces the cost of performing many other well completion, re-completion and workover procedures.

A CASING TRANSITION NIPPLE AND METHOD OF CASING A WELL TO FACILITATE WELL COMPLETION, RE-COMPLETION AND WORKOVER

FIELD OF THE INVENTION

This invention generally relates to hydrocarbon well completion, recompletion and workover and, in particular, to a casing transition nipple and method of casing a well to facilitate well completion, re-completion and workover.

BACKGROUND OF THE INVENTION

Most oil and gas wells require some form of stimulation to enhance hydrocarbon flow to make or keep them economically viable. The servicing of oil and gas wells to stimulate production requires the pumping of fluids under high pressure. The fluids may be caustic and are frequently abrasive because they are laden with abrasive propants such as sharp sand, bauxite or ceramic granules.

It is well know that advances in coil tubing technology have generated an increased interest in using coil tubing during well completion, re-completion and workover procedures. Techniques have been developed over the years for pumping well fracturing fluids through coil tubing, or pumping "down the backside" around the coil tubing. Processes and equipment have also been developed for perforating casing and fracturing a production zone in a single operation, as described in Applicant's United States Patent 6,491,098 entitled Method and Apparatus for Perforating and Stimulating Oil Wells, which issued on December 10, 20002.

Although performing two or more functions in a single run down a cased wellbore is economical and desirable, there is a disadvantage with using existing techniques for performing such operations. The principal disadvantage is the height of the equipment stack that is necessary for lubricating the required tool string into the well.

FIG. 1 is a schematic diagram of a setup 10 for performing a well completion in accordance with the prior art techniques in which a long tool string (not shown), e.g. a tool string for perforating and stimulating production zones of the well in a single run, are lubricated into the cased well bore.

As schematically illustrated in FIG. 1, a wellhead generally indicated by reference numeral 12 includes a casing head 14 supported by a conductor 16. The casing head 14 supports a surface casing 18. A tubing head spool 20 is mounted to the casing head 14. The tubing head spool 20 supports a production casing 22, which extends downwardly through the production zone(s) of the well.

Mounted to a top of the tubing head spool 20 is a blowout preventer (BOP) 24 for controlling the well after the production casing 22 is perforated. Optionally mounted to a top of the BOP is a "frac cross" 26, also referred to as a fracturing head. The purpose of the frac cross 26 is to permit well stimulation fluids to be pumped down the backside, i.e. down production casing 22, and around a coil tubing 34.

Mounted to a top of the frac cross 26 is one or more "lubricator joints" 28. In this example three lubricator joints 28a, 28b and 28c are used. The lubricator joints house the downhole tool string (not shown), which is

supported by the coil tubing string 34, or a wire line (not shown). A coil tubing BOP 30 or a wire line BOP (not shown) is mounted to a top of the lubricator joints. Tubing rams of the coil tubing BOP seal around the coil tubing string 34 while the tool string is being run into and out of the well. Likewise, wire line rams of a wire line BOP seal around a wire line as it is being run into or out of the well. A coil tubing injector 32 is mounted to a top of the coil tubing BOP 30. The coil tubing injector 32 is used to run the coil tubing string 34 into and out of the production casing 22 in a manner well known in the art. The coil tubing string 34 is supplied from a coil tubing spool 36, which is likewise well known in the art and may be mounted on a trailer or a truck.

As is apparent, the setup 10 shown in FIG. 1 creates an equipment stack that extends 20′-40′ from the ground. The setup 10 is in a normally assembled on the ground and place after its is assembled. For the sake of clarity, the stays, work platforms, cranes and other equipment required to assemble, disassemble, operate, and maintain the setup 10 are not shown.

As will be understood by those skilled in the art, assembling and operating the setup 10 can be dangerous, because maintenance work must be performed on elevated work platforms high off the ground. As will be further understood, the setup 10 can also be dangerous because a great deal of mechanical bending and twisting stress is placed on the wellhead 12 and the lubricator 28 by the very high setup 10, which acts as a lever when force is applied to a top of the set up 10 by operation of the coil tubing injector or 32 or the wire line unit (not shown).

As will also be appreciated by those skilled in the art, assembling the setup 10 is expensive because heavy hoisting equipment, such as an 80-ton crane, is required to hoist the equipment to those heights. The 80-ton crane must also be connected to a top of the set up 10 and used to counter force applied to the setup 10 by operation of the coil tubing injector 32 or the wire line unit. The 80-ton crane must therefore remain on the job during the entire well stimulation process. The rental of such hoisting equipment for an extended period of time is very expensive.

There is therefore a need for a way of facilitating well completion, re-completion and workover while preserving the time and cost savings of being able to perform more than one function during a single run into a cased wellbore.

SUMMARY OF THE INVENTION

It is therefore an object of the invention to provide a way of facilitating and improving the safety of well completion, re-completion and workover while preserving the time and cost savings of being able to perform more than one function during a single run into a cased wellbore.

The invention therefore provides a casing transition nipple, comprising: a tubular body having a top end adapted for fluid tight connection to a well casing of a fist diameter and a bottom end adapted for fluid tight connection to a well casing of a second, smaller diameter; and a smooth annular tool guide surface between the first and second ends, the tool guide surface sloping downwardly with respect to the top end.

The invention further provides a method of casing a wellbore, comprising: running a production casing of a first diameter into the wellbore until a bottom end of the production casing of the first diameter is approximately a predetermined distance from a bottom of the wellbore; connecting a bottom end of a casing transition nipple to a top end of the production casing of the first diameter; connecting a bottom end of a production casing of a second, larger diameter to a top end of the casing transition nipple, the production casing of the second diameter having a length approximately equal to the predetermined distance; and suspending the production casing of the second, larger diameter from a wellhead of the well.

The invention yet further provides a method of casing a wellbore of a predetermined depth, comprising: running a production casing of a first diameter into the wellbore to a depth less than the predetermined depth of the wellbore; connecting a bottom end of a casing transition nipple to a top end of the production casing of the first diameter; connecting a bottom end of a production casing of a second, larger diameter to a top end of the casing transition nipple; and running the production casing of the second, larger diameter into the wellbore until the wellbore is cased.

BRIEF DESCRIPTION OF THE DRAWINGS

Having thus generally described the nature of the invention, reference will now be made to the accompanying drawings, in which:

FIG. 1 is a schematic diagram of a prior art setup for running a long downhole tool string into a production

casing of a well in order to perform more than on function in a single run into the well;

FIG. 2 is a schematic diagram of a well cased in accordance with an embodiment of the invention;

FIG. 3 is a schematic diagram of a well cased in accordance with another embodiment of the invention;

FIG. 4 is a schematic diagram of a well cased in accordance with yet another embodiment of the invention;

FIG. 5 is a schematic diagram of a well cased in accordance with yet a further embodiment of the invention;

FIG. 6 is a cross-sectional schematic diagram of the casing transition nipple shown in FIG. 2;

FIG. 7 is a cross sectional schematic diagram of the casing transition nipple shown in FIG. 3;

FIG. 8 is a cross-sectional schematic diagram of the casing transition nipple shown in FIG. 4;

FIG. 9 is a cross-sectional schematic diagram of the casing transition nipple shown in the FIG. 5;

FIG. 10 is a schematic diagram of a set up for lubricating a long downhole tool string into a well cased in accordance with the invention;

FIG. 11 is a schematic diagram of the set up shown in FIG. 10, illustrating the long downhole tool string in a "lubricated-in" condition; and

FIG. 12 is a schematic diagram of a setup in accordance with another embodiment of the invention illustrating the long downhole tool string in a lubricated

in condition, the setup being configured to run the long downhole tool string into the well using a wire line unit.

DETAILED DESCRIPTION OF THE PREFERRED EMBODIMENTS

The invention provides a casing transition nipple and a method of casing a well in order to facilitate well competition, re-completion and workover. In accordance with the invention, the casing transition nipple is used to interconnect a bottom end of at least one casing joint of a first diameter having a top end connected to the wellhead and a top end of a production casing of a second, smaller diameter that communicates with production zones of the well. A well cased in accordance with the invention facilitates many well completion, recompletion and workover procedures. For example, the well cased in accordance with the invention facilitates the process of lubricating long downhole tool strings into the well and significantly reduces a distance that a coil tubing injector or a wire line unit is above the ground after the tool string has been lubricated into the well. This significantly reduces expense and improves safety by lowering working height and significantly reducing strain on the wellhead.

FIG. 2 is a schematic diagram partially in cross-section showing a well cased in accordance with the invention. As schematically shown in FIG. 2, the surface casing 18 is supported by a casing mandrel or casing slips 46 landed in a casing bowl, in a manner well known in the art. If the casing 18 is supported by casing slips, a top of the casing is cut off after the slips are set.

A casing transition nipple 40a connects an upper section of production casing 42 to a lower section of production casing 44. The upper section of production

casing 42 has a larger diameter than the lower section of production casing 44. For example, the upper section of production casing 42 may have a diameter of 6-8 inches. The lower section of production casing 44 is of a standard casing size, e.g. 4 ½, 5 or 5 ½ inches. A lower section of the production casing extends from the casing transition nipple 40a to the bottom of the well.

In one embodiment of the invention the upper section of production casing 42 has a length of 6-60 feet. It may be, for example, one joint of casing, which is typically 30 feet in length. However, the upper section of production casing 42 may be shorter or longer than 30 feet, depending on anticipated need.

In this embodiment, the casing transition nipple 48 is box threaded on each end as will be explained below in more detail with reference to FIG. 6.

FIG. 3 is a schematic diagram partially in cross-section showing a well cased in accordance with another embodiment of the invention. The upper section of production casing 42 and the lower section of production casing 44 are identical to that described above with reference to FIG. 2. In this embodiment, a casing transition nipple 40b has a box end for connection to the upper section of production casing 42 and a nipple end for connection to the lower section of production casing 44. Consequently, a casing collar 50, commonly known in the art for connecting joints of casing, is used to connect the nipple end of the casing transition nipple 40b to the lower section of the production casing 44. This will be explained below in more detail with reference to FIG. 7.

FIG. 4 is a schematic diagram partially in cross-section showing a well cased in accordance with yet a further embodiment of the invention. The upper section of the production casing 42 and the lower section of the production casing 44 are the same as that described above with reference to FIG. 2. In this embodiment, the casing transition nipple 40c is pin threaded for connection to the upper section of the production casing 42 and box threaded for connection to the lower section of the production casing 44. Consequently, a casing collar 52 is used to connect the upper section of the production casing 42 to the transition nipple 40c, as will be explained below in more detail with reference to FIG. 8.

FIG. 5 is a schematic diagram partially in cross-section showing a well cased in accordance with yet another embodiment of the invention. The upper section of the production casing for 42 and the lower section of the production casing 44 are the same as that described above with reference to FIG. 2. In this embodiment, the casing transition nipple 40c is pin threaded for connection to the upper section of the production casing 42 and pin threaded for the connection of the lower section of the production casing 44. Consequently, a casing collar 52 is used to connect the upper section of the production casing 42 to the casing transition nipple 40d, and a casing collar 50 is used to connect the lower section of the production casing 44 to the casing transition nipple 40d, as will be explained below in more detail with reference to FIG. 9.

FIG. 6 is a cross-sectional schematic view of the casing transition nipple 40a shown in FIG. 2. The casing transition nipple 40a has a top end 60a for connection to the upper section of the production casing 42. The casing

transition nipple 40a also has a bottom end 62a for connection of the lower section of the production casing 44. The casing transition nipple 40a further includes a smooth, annular downwardly inclined tool guide surface 68a. As illustrated, in one embodiment the tool guide surface 68a is downwardly inclined at an angle of about 30°-60° from a plane that is perpendicular to the top end 60a and the bottom and 62a of the casing transition nipple 40a.

The upper end 60a has a box thread 64a, which engages a pin threaded end of the upper section of the production casing 42. The box thread 64a is shown schematically. As is understood by those skilled in the art, casing is available in a plurality of thread patterns. For example, casing may be threaded using a Buttress, Hydril, Acme, Rucker Atlas, EUE 8-round, EUE 10-round, EUE 8-V or EUE 10-V thread pattern, and this list is not exhaustive. It should therefore be understood that the thread pattern used to machine threads on any of the box threaded or pin threaded ends described above and below is purely a matter of design choice, and the schematically illustrated threads shown in FIGs. 6-9 are intended to be representative of any thread pattern applied to casing, as well as any other method that may be used for connecting the casing 40,42 to the casing transition nipple 40 a-d. The bottom end 62a likewise includes a box thread 66a for direct connection of a pin threaded top end of the lower section of the production casing 44.

FIG. 7 is a cross-sectional schematic diagram of the casing transition nipple 40b shown in FIG. 3. The casing transition nipple 40b is identical to the casing transition nipple 40a described above with reference to FIG. 6 with the exception that the bottom end 62b is pin threaded. As

explained above with reference to FIG. 3, a casing collar 50 is used to connect the lower section of production casing 44 to the pin thread 70b of the casing transition nipple 40b.

FIG. 8 is a schematic cross-sectional view of a casing transition nipple 40c described above with reference to FIG. 4. The casing transition nipple 40c is the same as the casing transition nipple 40a described above, with the exception that the top end 60c is pin threaded and the bottom end 62c is box threaded. Consequently, a casing collar 52 is used to connect the production casing 42 to the top end 60c of the casing transition nipple 40c. As explained above, the lower section of production casing 44 is connected directly to the box thread 66c of the casing transition nipple 40c.

FIG. 9 is a schematic cross-sectional view of the casing transition nipple 40d described above with reference to FIG. 5. The casing transition nipple 40d is the same as the casing transition nipple 40a described above with reference to FIG. 6 with the exception that the top end 60d is pin threaded and the bottom end 62d is also pin threaded. Consequently, as described above with reference to FIG. 5 a casing collar 52 is used to connect the upper section of production casing 42 to the pin thread 72d of the top end 60d. Likewise, a casing collar 50 is used to connect the lower section of production casing 44 to the pin thread 70d of the bottom end 62d of the casing transition nipple 40d.

As will be understood by those skilled in the art, any of the above the threaded connections may be made permanent using a thread glue such as Baker Lock®. Furthermore, any of the above connections may be welded connections, glued

connections, or connections made using any one of a number of fluid tight quick-lock, screw-lock or other locking connectors that are known in the art.

FIG. 10 is a schematic view partially in cross-section of a setup 100 for running a long downhole tool string 102 into a wellbore cased in accordance with the invention. As used in this document, a "long downhole tool string 102" means any one or more of a perforating gun; jetting tool; packer; plug; a selective acidizing and/or fracturing tool; a casing or tubing cutter; a fishing tool; a pulling tool; a grapple; etc. in any combination.

The setup 100 is very similar to the setup 10 described above with reference to FIG. 1, with the exception that the lubricator 28a-c is replaced by a subsurface lubricator 104 that is schematically illustrated. The subsurface lubricator 104 is not described because it is not within the scope of this invention. None of the control structure for the subsurface lubricator 104 is illustrated for the purposes of clarity. In this example, the subsurface lubricator 104 is mounted to a top of the frac cross 26, which is in turn mounted to a top of a blowout preventer 24 as described above with reference to FIG. 1. As will be understood by those skilled in the art, prior to lubricating in the long downhole tool string 102 blind rams 106 of the blowout preventer 24 are closed to seal an annulus of the upper section of the production casing 42. Due to a length of the downhole tool string 102, a height of the set up 100 is 20'-40', similar to the set up 10 shown in FIG. 1.

The set up 100 is assembled on the ground in a manner to that described above with reference to FIG. 1. The set up 100 may be hoisted into position using, for example, a

coil tubing unit crane, because as will be explained below with reference to FIG. 11, an 80-ton crane is not required to stabilize the setup 100 after it is "lubricated in".

FIG. 11 is a schematic diagram partially in cross-section of the setup 100 after it has been lubricated into the wellbore cased in accordance with the invention. As will be understood by those skilled in the art, the subsurface lubricator 104 has been lowered down through the blowout preventer protector 24 and the wellhead 14 and into the upper section of the production casing 42 to a locked-down condition in which a well completion, recompletion or workover procedure is ready to be performed. As can be seen, in the locked-down position a height of a top of the coil tubing injector 32 is about 15'-18' above the ground, as opposed to about 40' above the ground for the setup 10 shown in FIG. 1. The setup 100 reduces cost because a crane is not required to stabilize the setup 100 after it is lubricated in. The setup 100 also significantly improves a work safety and facilitates equipment maintenance because of the reduced working height. As will be understood by those skilled in the art, mechanical bending and twisting stresses on the wellhead 14 are also significantly reduced. This is not only due to the reduced working height of the setup 100, but also due to the subsurface lubricator 104 which runs inside the upper section of the production casing 42 and thereby lends significant rigidity to the wellhead components through which it is run. Consequently, rather than mechanically stressing the wellhead, the setup 100 actually reinforces the wellhead and substantially eliminates any possibility that the wellhead could be damaged by the mechanical bending and twisting forces exerted by coil tubing or wireline units when long tool strings are lubricated into or out of the well.

FIG. 12 is a schematic diagram partially in cross-section of another setup 110 in accordance with the invention, showing the long downhole tool string 102 in a lubricated in condition. The setup 110 is configured to lower the long downhole tool string 102 into the wellbore cased in accordance with the invention using a wireline unit 106, which is schematically illustrated. As understood by those skilled in the art, a wireline 84 of the wireline unit 106 runs over a wireline sheave 88 and through a grease injector 82. The grease lines, pumps and other components of the grease injector 82 are not shown. The wireline 84 runs through a wireline BOP 80 and the frac cross 26. The wireline 84 is connected to a top of the long downhole tool string 102. In this example, the wireline sheave 88 is supported by a sheave boom 86 mounted to a side of the subsurface lubricator 104, so that a crane is not required to support the wireline sheave 88. The setup 110 provides all of the advantages described above with reference to the setup 100.

A wellbore cased in accordance with the invention therefore improves work safety, enables downhole operations that were heretofore impossible, impractical or excessively dangerous, and reduces cost by lowering the overall working height after a long downhole tool string has been lubricated into the cased well.

As will be understood by those skilled in the art, the above-noted dimensions of the upper section of production casing 42 and the casing transition nipple 40a are exemplary only. The dimensions of the upper section of the production casing 42, a lower section of the production casing 44 and the casing transition nipple 40a-d are, within certain limits, a matter of design choice. It is

only important that the upper section of production casing 42 has an internal diameter large enough to accept a subsurface lubricator that provides full-bore access to the lower section of production casing 44. A difference in the two diameters of about 1 1/2"-3 1/2" is generally sufficient. It is also important that a burst strength of a the upper section of production casing 42 be at least as high as a burst strength of the lower section of production casing 44, or at least as high as anticipated well stimulation fluid pressures, plus a margin for safety.

The embodiments of the invention described are therefore intended to be exemplary only, and the scope of the invention is intended to be limited solely by the scope of the appended claims.

I Claim:

1. A casing transition nipple, comprising:

   a tubular body having a top end adapted for fluid tight connection to a well casing of a fist diameter and a bottom end adapted for fluid tight connection to a well casing of a second, smaller diameter; and

   a smooth annular tool guide surface between the first and second ends.

2. The casing transition nipple as claimed in claim 1 wherein the fluid tight connections to the top and bottom ends comprise one or more of: threaded, welded, locking or glued connections.

3. The casing transition nipple as claimed in claim 2 wherein the wherein the top end is box threaded and the bottom end is box threaded.

4. The casing transition nipple as claimed in claim 2 wherein where in the top end is box threaded and the bottom end is pin threaded.

5. The casing transition nipple as claimed in claim 2 wherein the the top end is pin threaded and the bottom end is box threaded.

6. The casing transition nipple as clamed in claim 2 wherein the top end is pin threaded and the bottom end is pin threaded.

7. The casing transition nipple as claimed in claim 1 wherein the annular tool guide surface slopes downwardly at an angle of a 30°-60° with respect to a plain that is perpendicular to the top and bottom ends.

8. A method of casing a wellbore, comprising:

running a production casing of a first diameter into the wellbore until a bottom end of the production casing of the first diameter is approximately a predetermined distance from a bottom of the wellbore;

connecting a bottom end of a casing transition nipple to a top end of the casing of the first diameter;

connecting a bottom end of a production casing of a second, larger diameter to a top end of the casing transition nipple, the production casing of the second diameter having a length approximately equal to the predetermined distance; and

suspending the production casing of the second, larger diameter from a wellhead of the well.

9. The method as claimed in claim 8 wherein suspending the production casing of the second, larger diameter from the wellhead comprises suspending the production casing using a casing mandrel.

10. The method as claimed in claim 8 wherein suspending the production casing of the second, larger diameter from the wellhead comprises suspending the production casing using casing slips.

11. The method as claimed in claim 8 wherein the predetermined distance is 6-60 feet.

12. The method as claimed in claim 8 wherein the diameter of the first casing is one of 4 ½, 5 and 5 1/2 inches.

13. The method as claimed in claim 10 wherein a diameter of the second casing is 5 ½-8 inches.

14. The method as claimed in claim 8 further comprising using at least one casing collar to connect at least one of the casings of the first and second diameter to the casing transition nipple.

15. A method of casing a wellbore of a predetermined depth, comprising:

running a production casing of a first diameter into the wellbore until a bottom end of the production casing of the first diameter is at a depth that is less than the predetermined depth of the wellbore;

connecting a bottom end of a casing transition nipple to a top end of the production casing of the first diameter;

connecting a bottom end of a production casing of a second, larger diameter to a top end of the casing transition nipple; and

running the production casing of the second, larger diameter into the wellbore until the wellbore is cased.

16. The method as claimed in claim 15 further comprising suspending the production casing of the second, larger

diameter from a wellhead that suspends a surface casing in the wellbore.

17. The method as claimed in claim 16 wherein suspending the production casing comprises connecting a top end of the production casing to a casing mandrel and landing the casing mandrel in a casing bowl of the wellhead.

18. The method as claimed in claim 16 wherein suspending the production casing comprises landing casing slips around the production casing in a casing bowl of the wellhead, and cutting off a top of the production casing above the casing slips.

19. The method as claimed in claim 15 wherein a difference between the depth of the wellbore and the depth to which the production casing of the first diameter is run into the wellbore is about 6-60 feet.

20. The method as claimed in claim 15 wherein a difference in a diameter of the production casing of the first diameter and the production casing of the second diameter is about 1 1/2"-3 1/2".

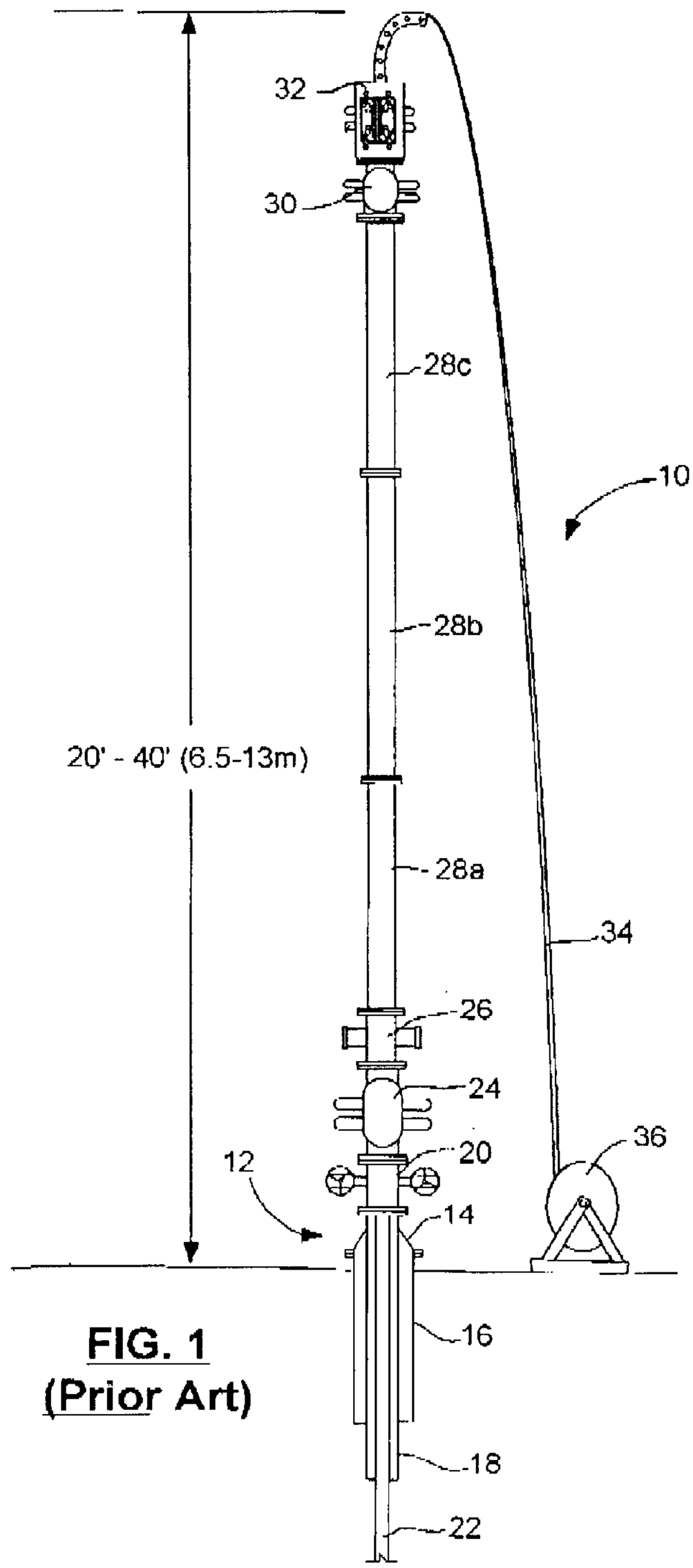

FIG. 1
(Prior Art)

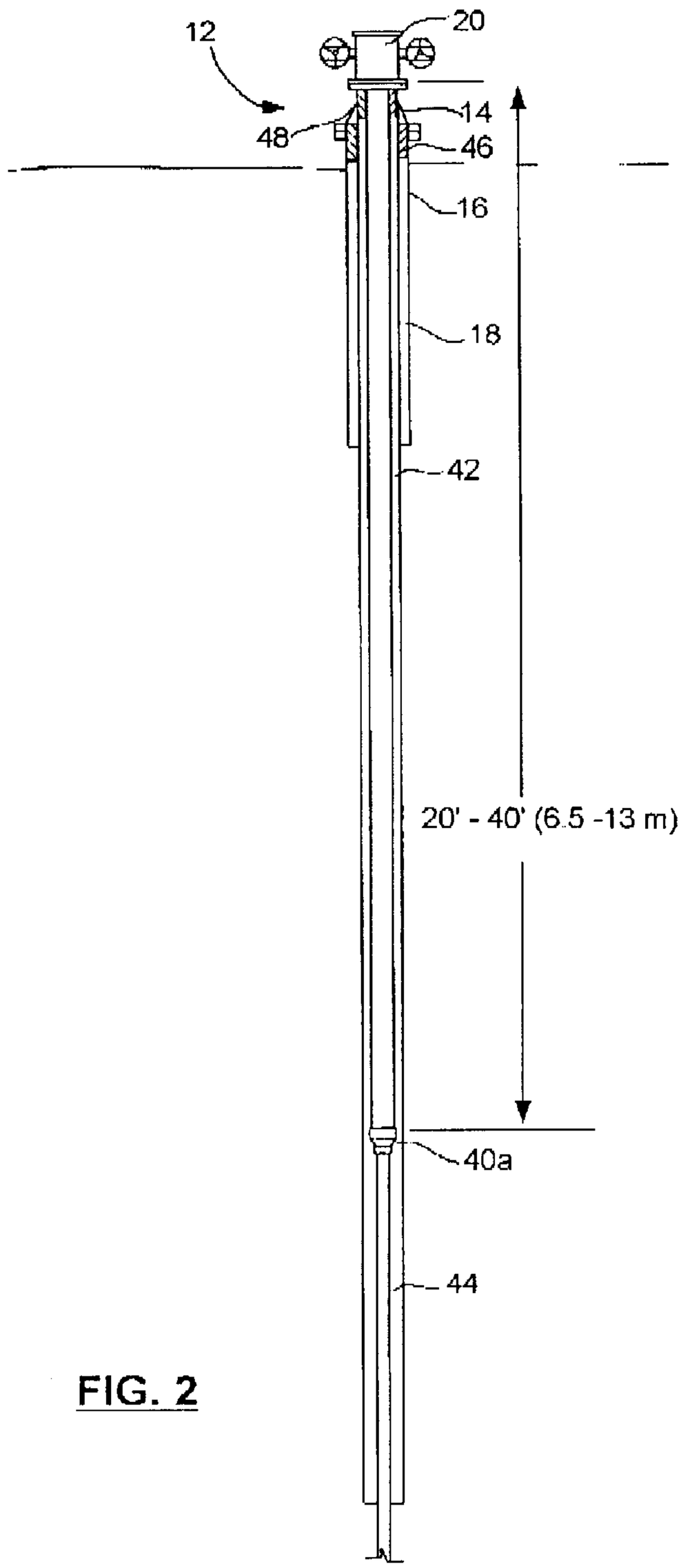

FIG. 2

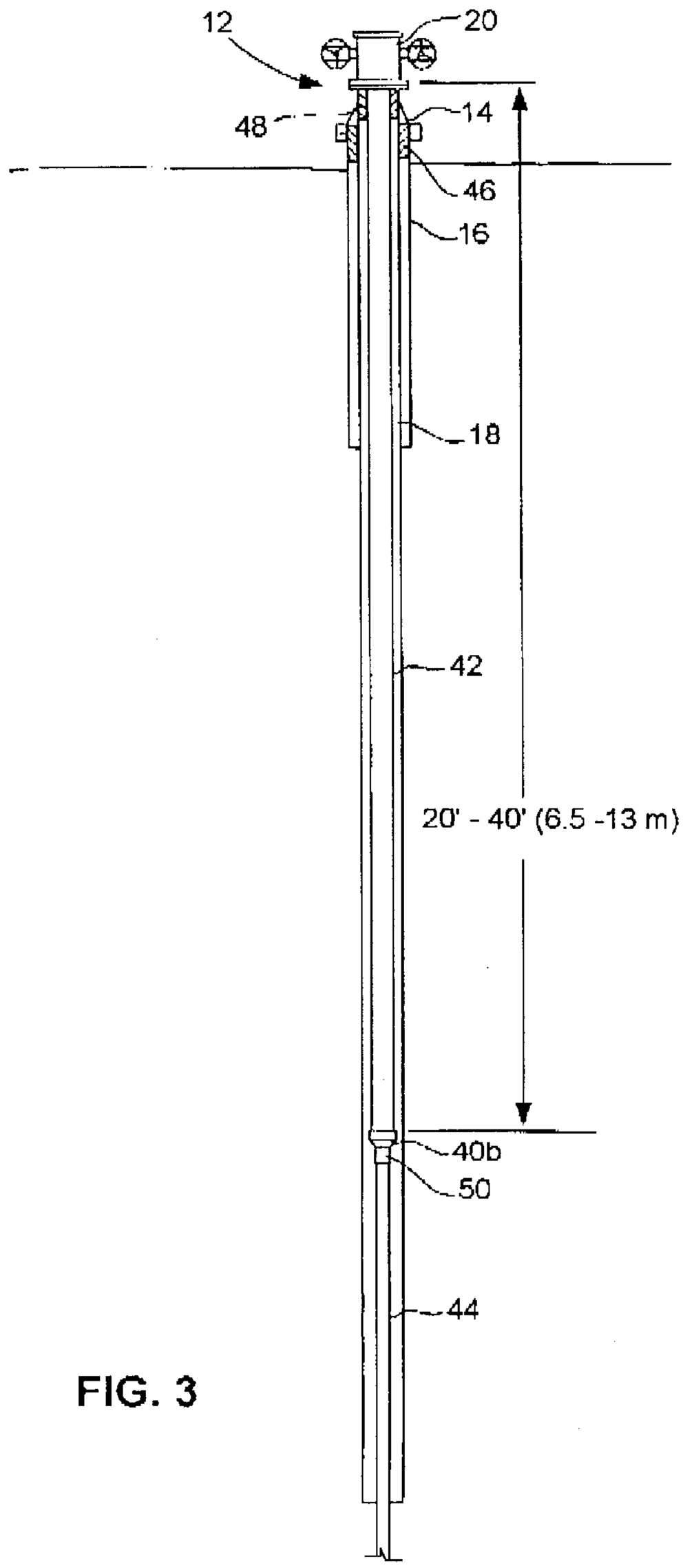

FIG. 3

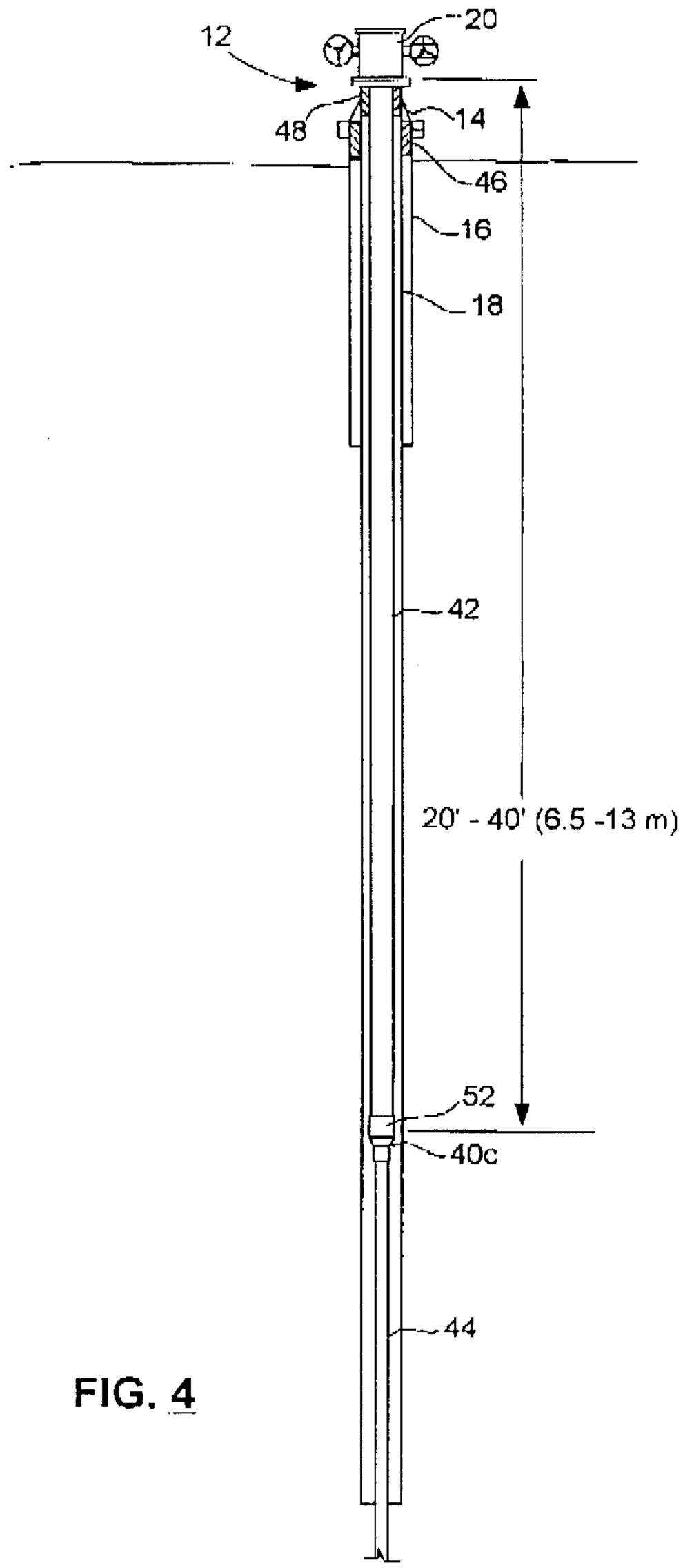

FIG. 4

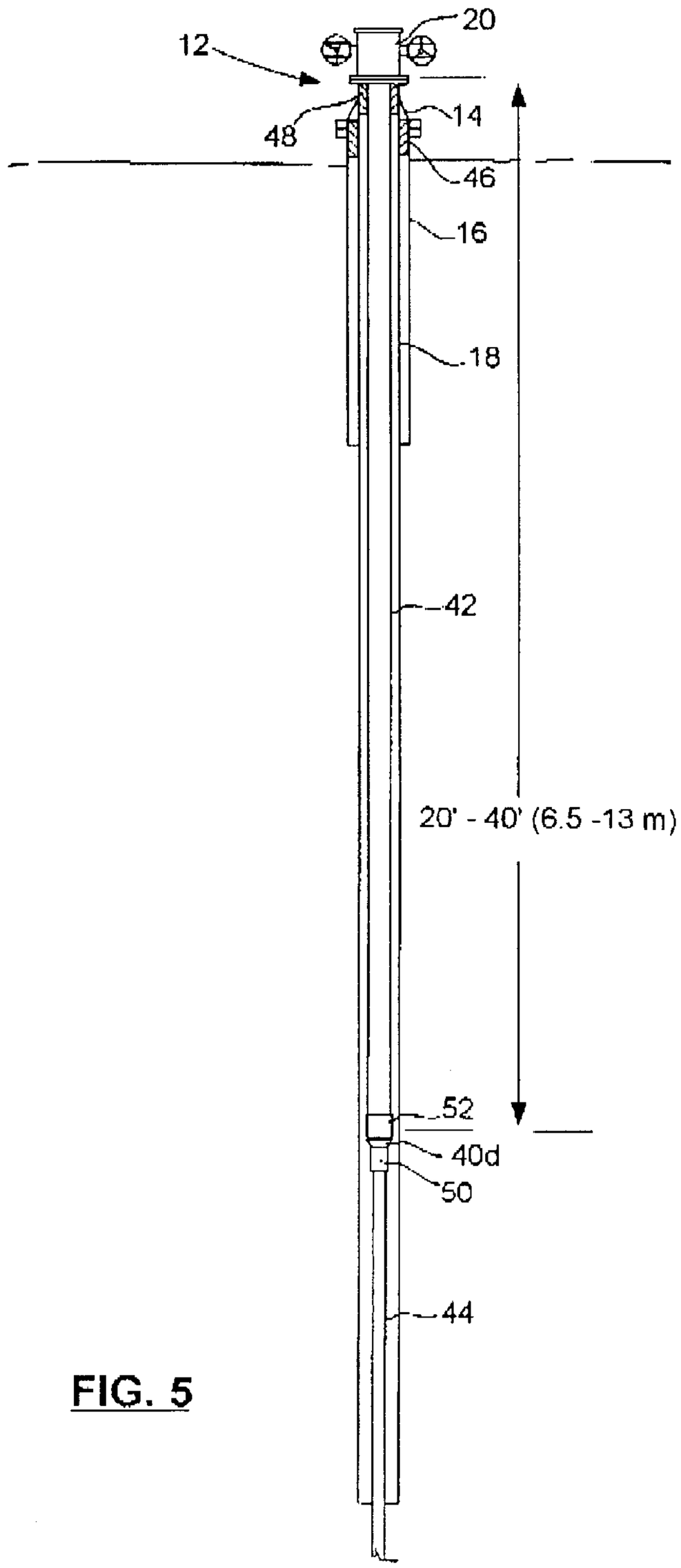

FIG. 5

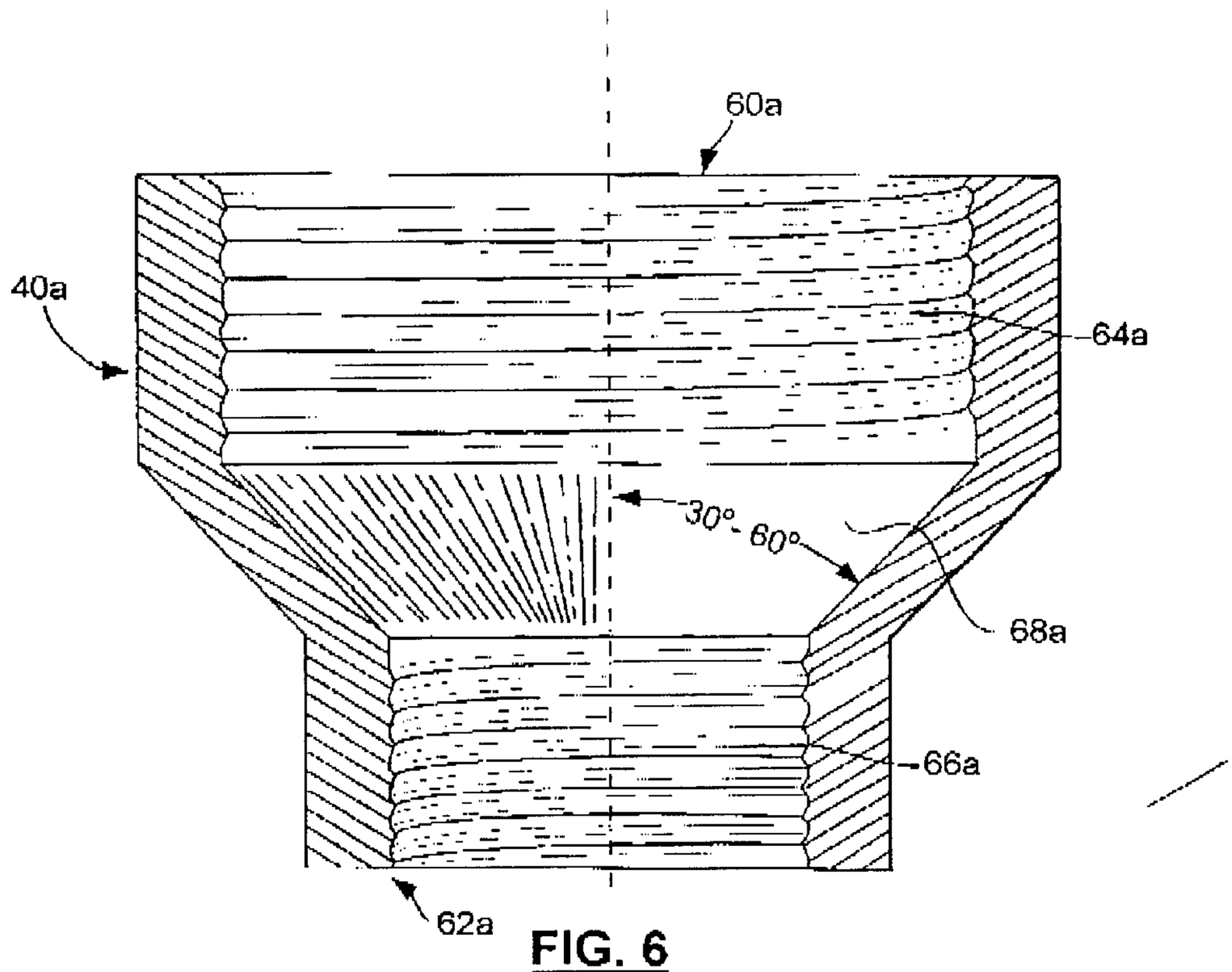

FIG. 6

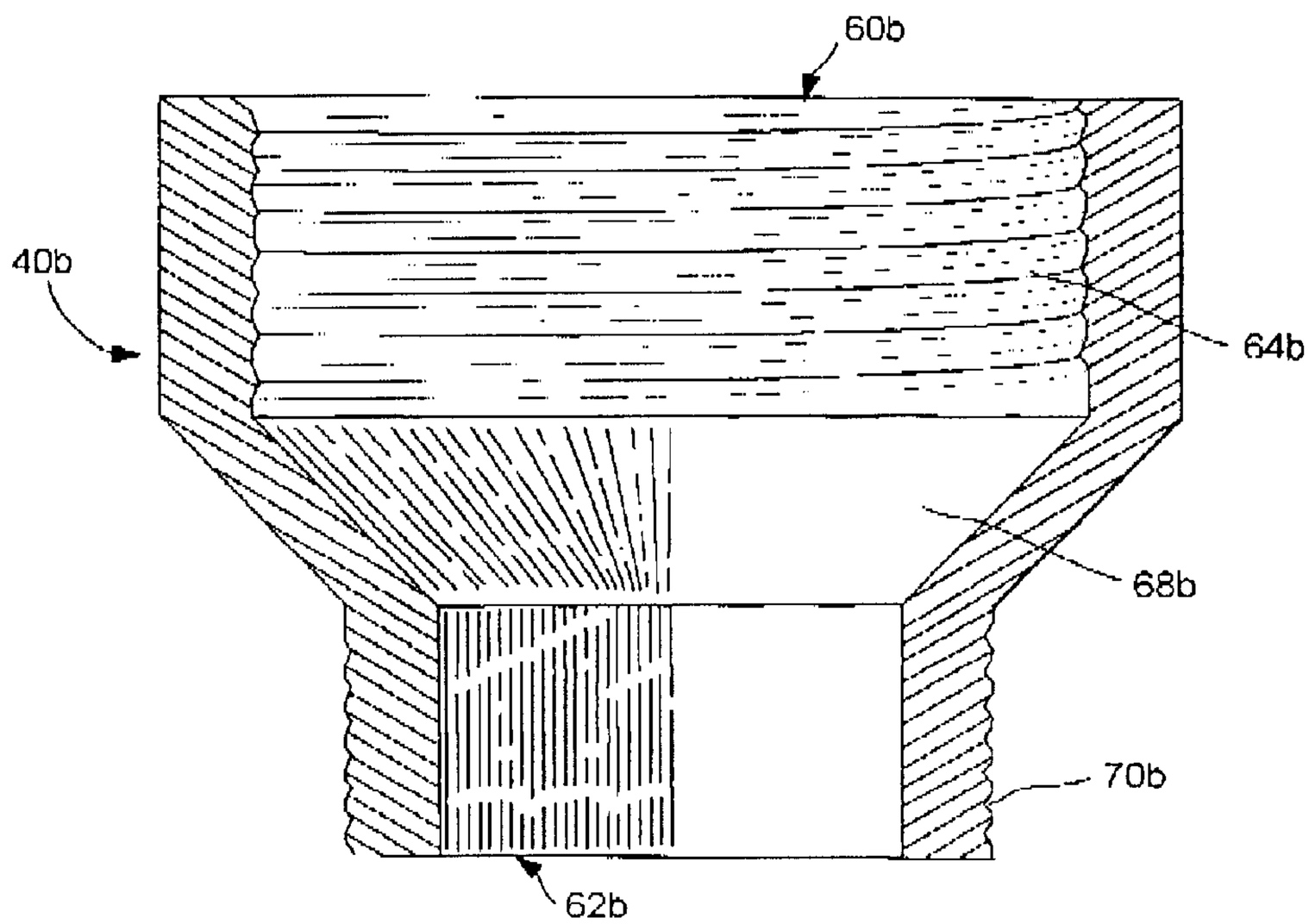

FIG. 7

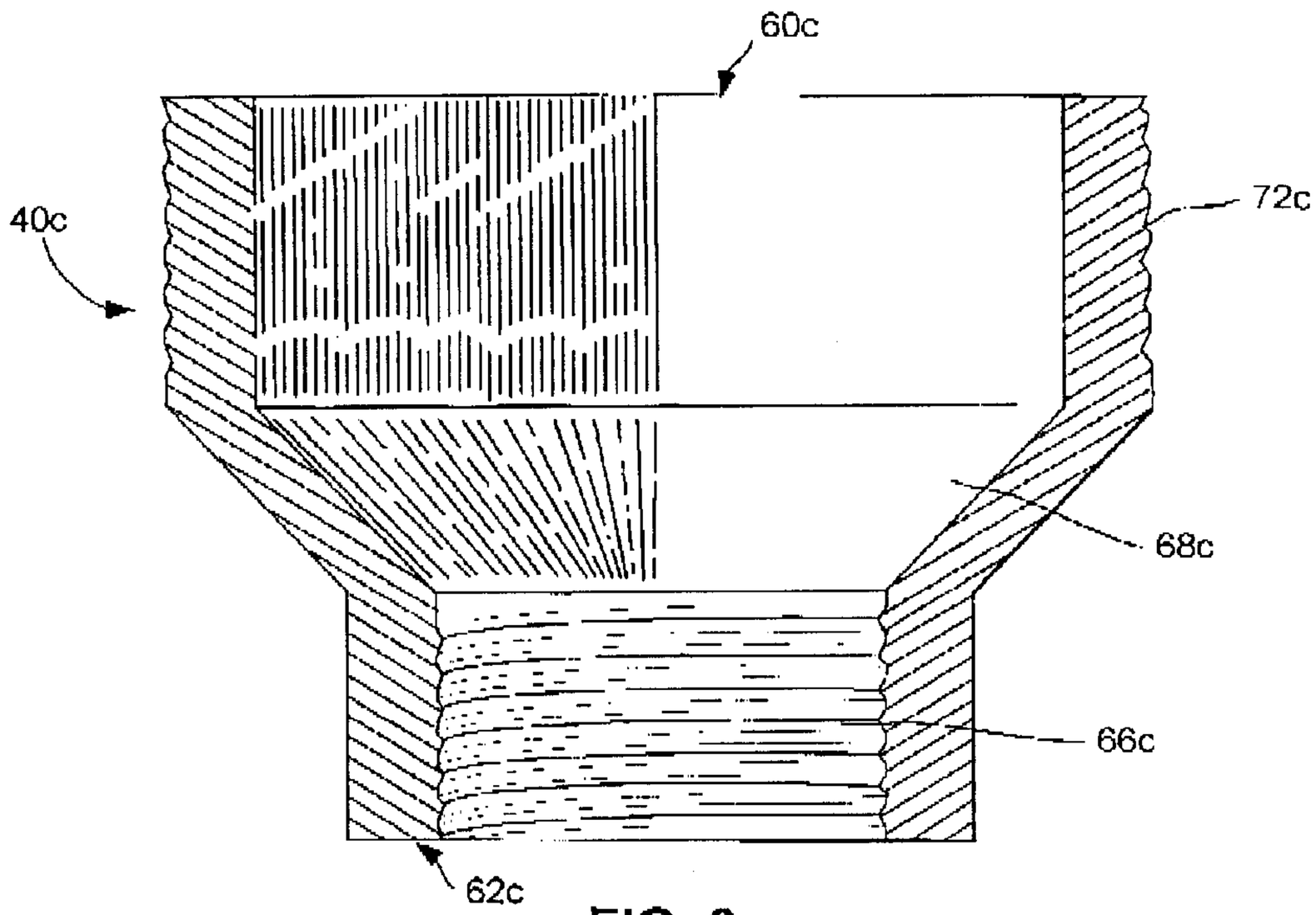

FIG. 8

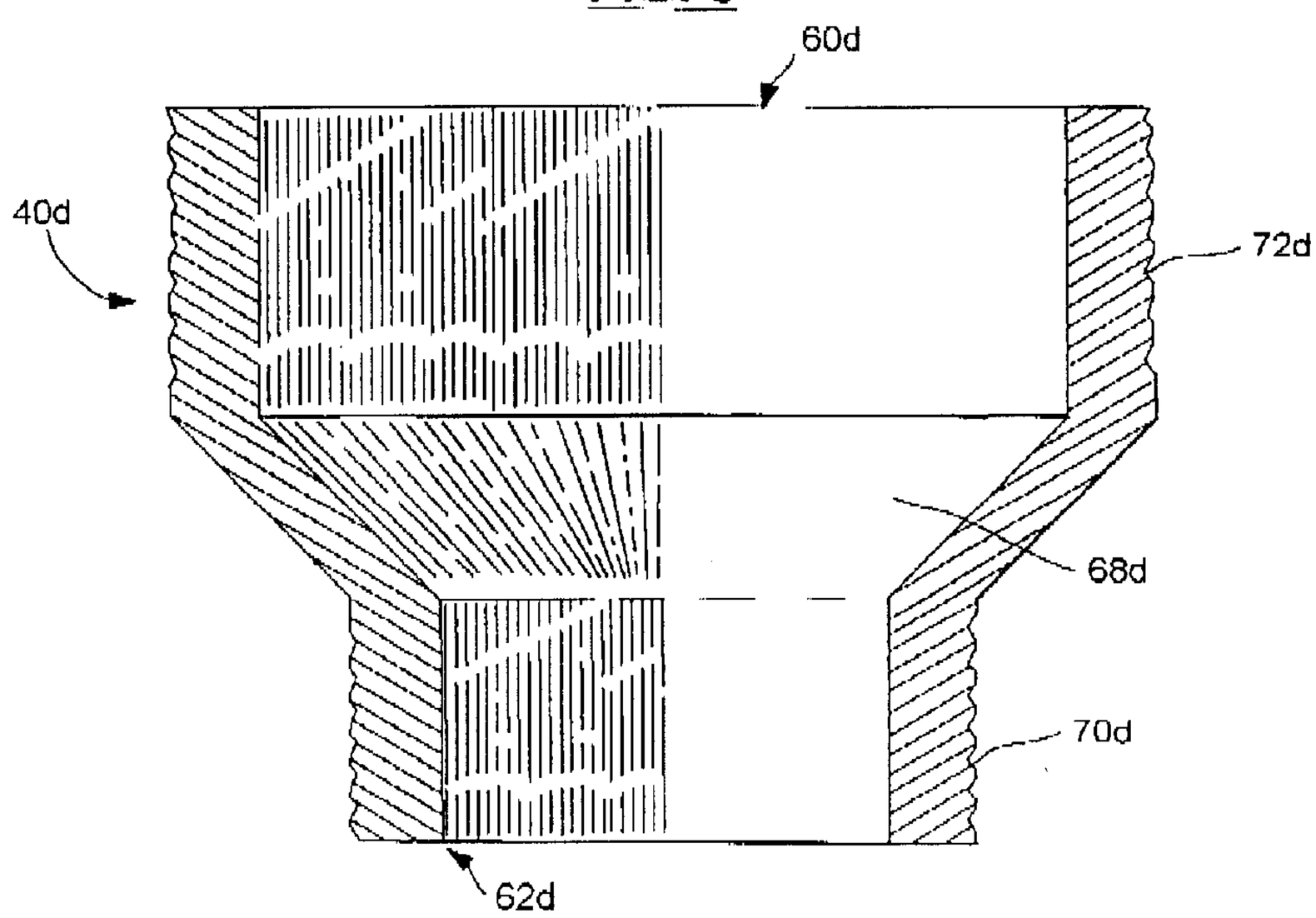

FIG. 9

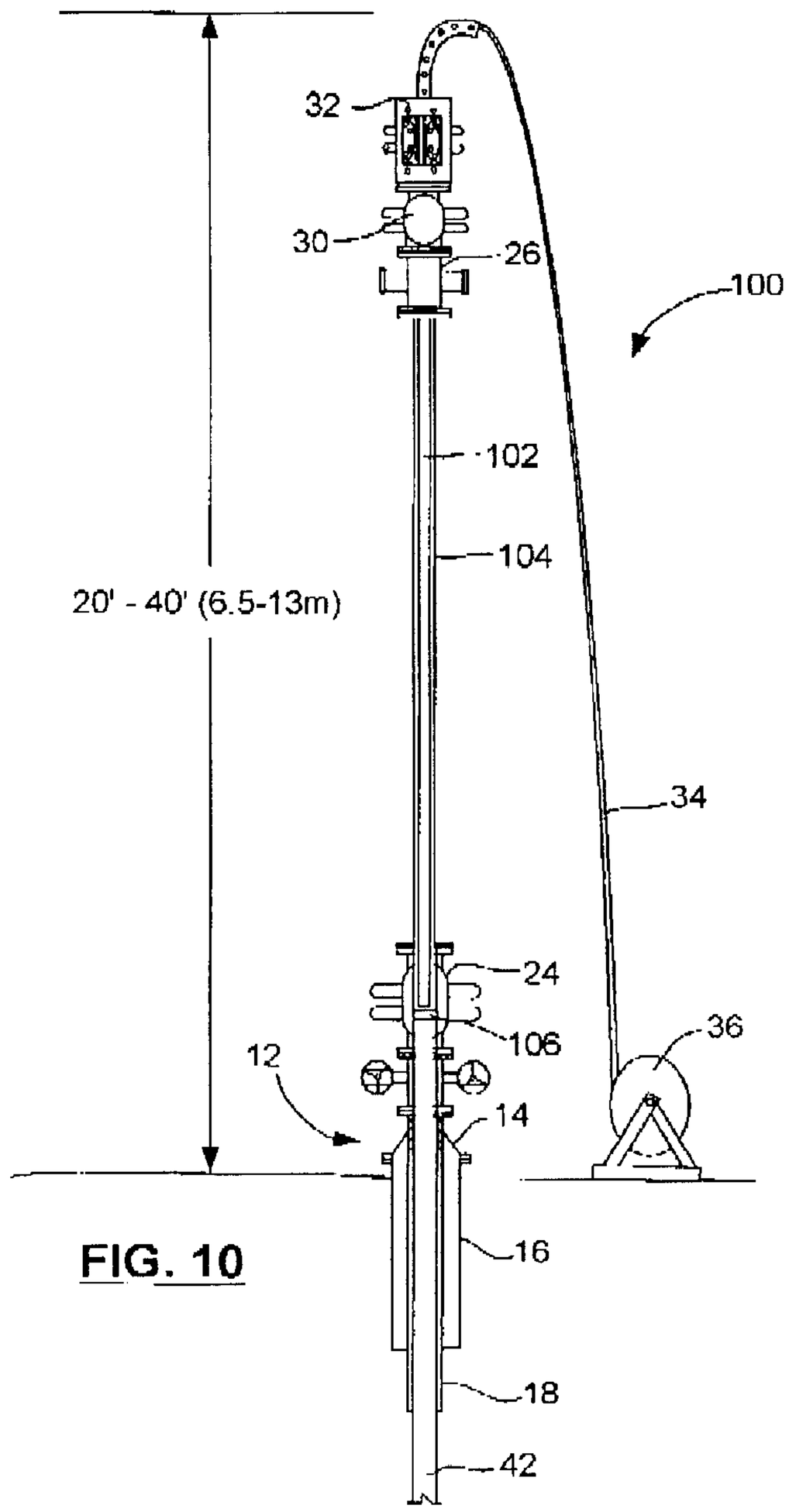

FIG. 10

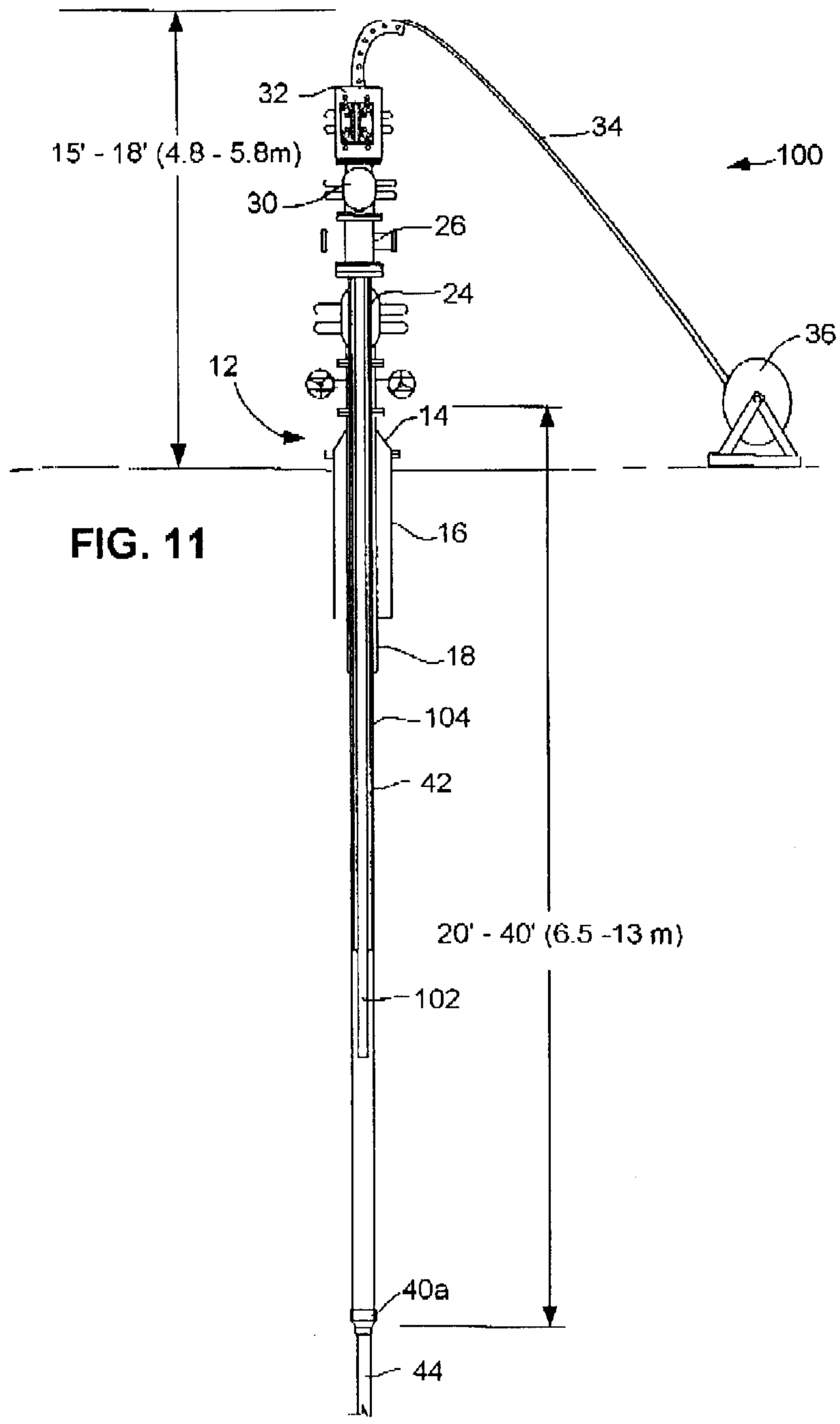
32
34
100
15' - 18' (4.8 - 5.8m)
30
26
24
36
12
14
16
18
104
42
20' - 40' (6.5 -13 m)
102
40a
44

FIG. 11

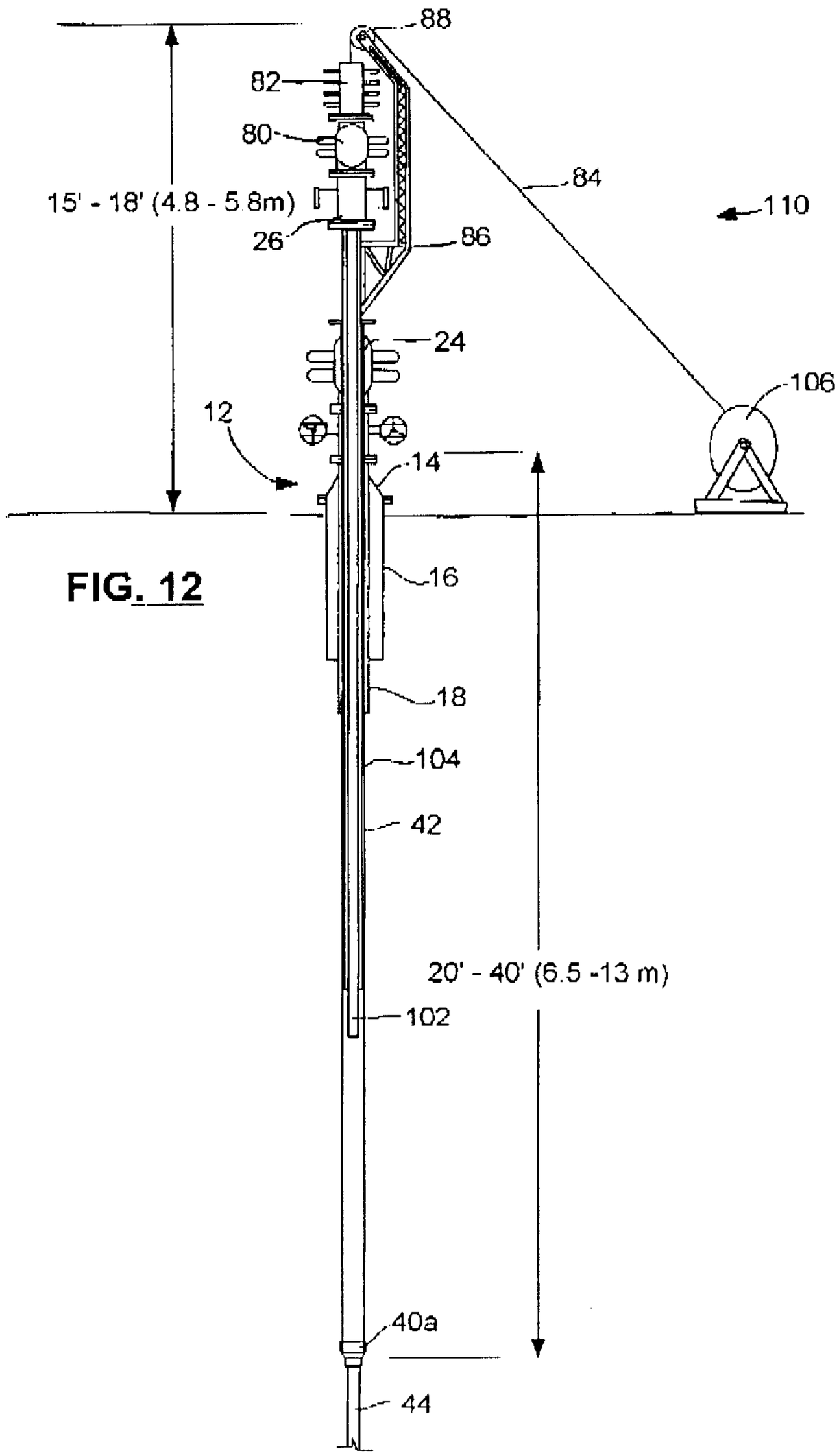
88
82
80
84
110
15' - 18' (4.8 - 5.8m)
26
86
24
106
12
14
16
18
104
42
20' - 40' (6.5 -13 m)
102
40a
44

FIG. 12

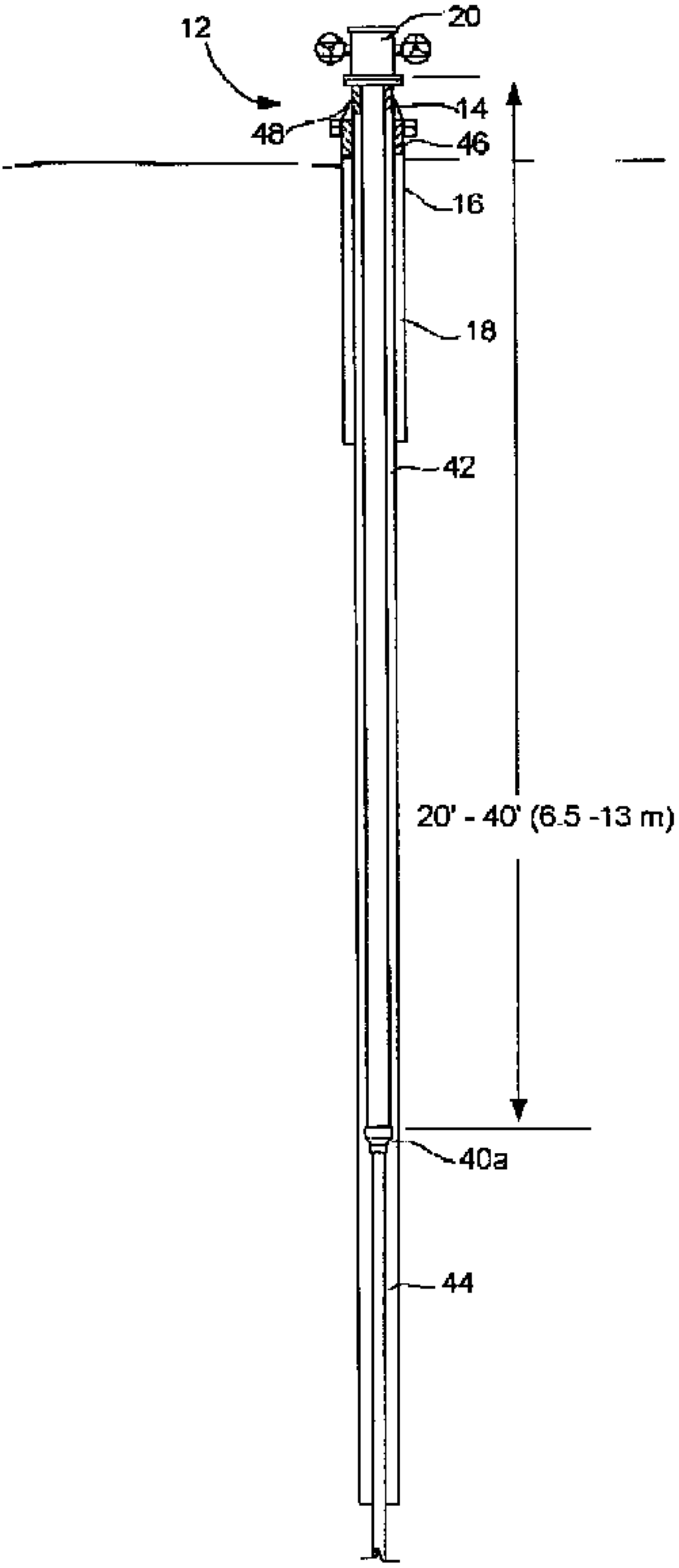
12
20
14
48
46
16
18
42
20' - 40' (6.5 -13 m)
40a
44