Office de la Propriété Intellectuelle du Canada
Un organisme d'Industrie Canada

Canadian Intellectual Property Office
An agency of Industry Canada

CA 2130364 C 2002/01/22

(11)(21) 2 130 364

(12) BREVET CANADIEN
CANADIAN PATENT

(13) C

(22) Date de dépôt/Filing Date: 1994/08/18

(41) Mise à la disp. pub./Open to Public Insp.: 1995/02/21

(45) Date de délivrance/Issue Date: 2002/01/22

(30) Priorité/Priority: 1993/08/20 (933670) FI

(51) Cl.Int.^{5}/Int.Cl.^{5} G01L 9/12

(72) Inventeur/Inventor:
Ryhänen, Tapani, FI

(73) Propriétaire/Owner:
Vaisala Oy, FI

(74) Agent: SWABEY OGILVY RENAULT

(54) Titre : TRANSDUCTEUR CAPACITIF COMMANDE PAR REACTION A L'AIDE D'UNE FORCE ELECTROSTATIQUE ET METHODE POUR CONTROLER LE PROFIL DE L'ELEMENT TRANSDUCTEUR

(54) Title: CAPACITIVE TRANSDUCER FEEDBACK-CONTROLLED BY MEANS OF ELECTROSTATIC FORCE AND METHOD FOR CONTROLLING THE PROFILE OF THE TRANSDUCING ELEMENT IN THE TRANSDUCER

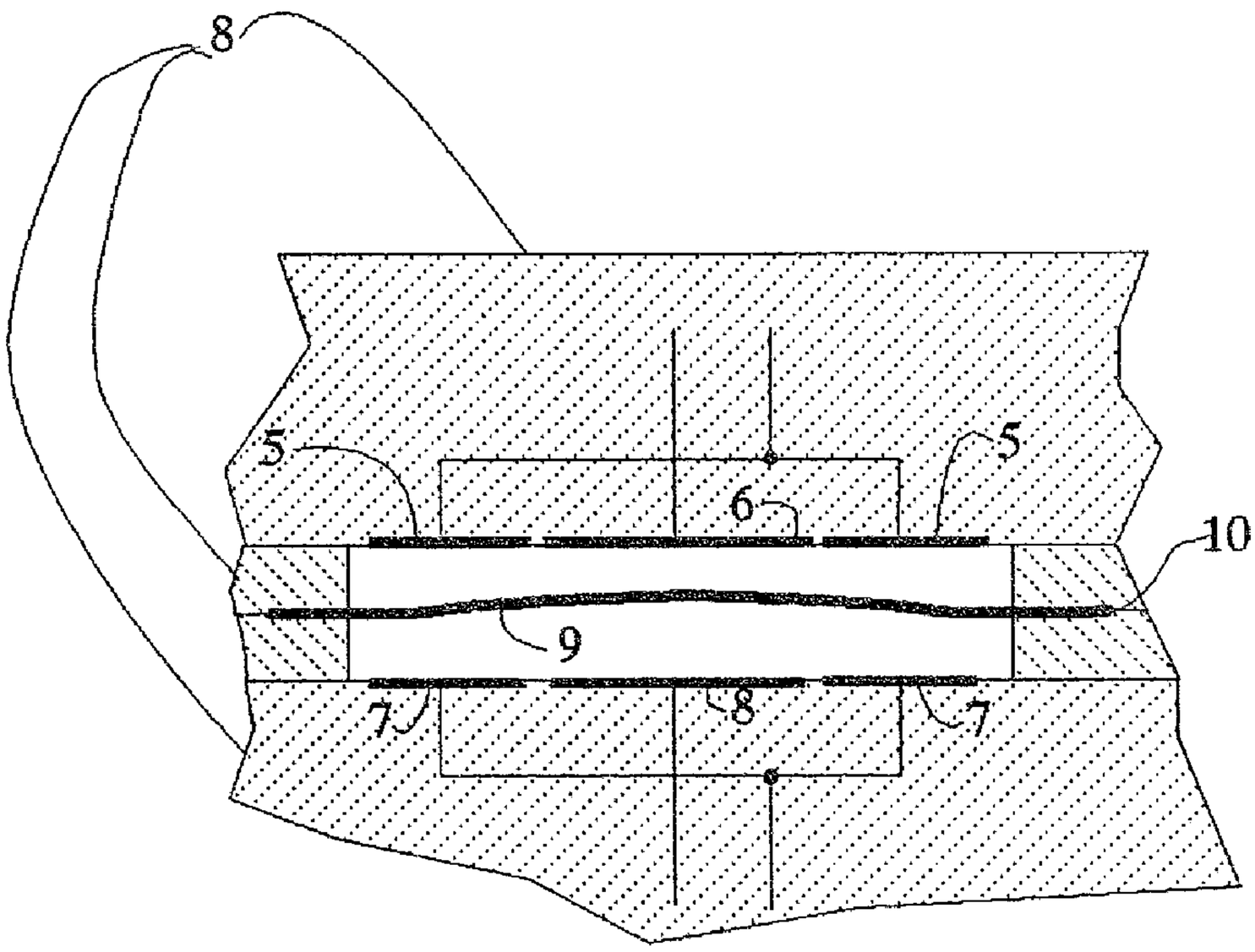

(57) Abrégé/Abstract:
The invention is related to a capacitive transducer feedback-controlled by means of electrostatic force and a method for controlling said transducer. The transducer comprises a body part (8) supporting a dynamically moving transducing element sensitive to the variable being measured, said transducing element being, e.g., a diaphragm (9) or a reference mass (36) supported by a bending beam (37), said element further being at least on its surface electrically conductive to the end of forming a first electrode (9, 36) of the transducer, and the transducer further comprising at least two second, planar electrodes (5, 6) which are placed on the same side with regard to the transducing element (9, 37). According to the invention, the second electrodes (5, 6) have at least essentially equal effective areas to the end of measuring the profile of the transducing element (9, 37) and controlling the same to an exactly defined geometric state.

Abstract

The invention is related to a capacitive transducer feedback-controlled by means of electrostatic force and a method for controlling said transducer. The transducer comprises a body part (8) supporting a dynamically moving transducing element sensitive to the variable being measured, said transducing element being, e.g., a diaphragm (9) or a reference mass (36) supported by a bending beam (37), said element further being at least on its surface electrically conductive to the end of forming a first electrode (9, 36) of the transducer, and the transducer further comprising at least two second, planar electrodes (5, 6) which are placed on the same side with regard to the transducing element (9, 37). According to the invention, the second electrodes (5, 6) have at least essentially equal effective areas to the end of measuring the profile of the transducing element (9, 37) and controlling the same to an exactly defined geometric state.

Capacitive transducer feedback-controlled by means of electrostatic force and method for controlling the profile of the transducing element in the transducer

The invention is related to a capacitive transducer employing feedback-control by means of electrostatic force.

The invention also concerns a method for controlling the profile of the transducing element in a transducer feedback-controlled by means of electrostatic force.

The following publications are cited as reference to the prior art:

USA patents:

[p1] U.S. Pat. No. 4,257,274 (Shimada *et al.*)

[p2] U.S. Pat. No. 4,386,453 (Gianchino *et al.*)

[p3] U.S. Pat. No. 4,332,000 (Petersen)

[p4] U.S. Pat. No. 4,390,925 (Freud)

[p5] U.S. Pat. No. 3,397,278 (Pomerantz)

[p6] U.S. Pat. No. 4,589,054 (Kuisma)

[p7] U.S. Pat. No. 4,628,403 (Kuisma)

[p8] U.S. Pat. No. 4,594,639 (Kuisma)

[p9] U.S. Pat. No. 4,831,492 (Kuisma)

[p10] U.S. Pat. No. 4,996,627 (Zias et al.)

[p11] U.S. Pat. No. 5,019,783 (Cadwell)

[p12] U.S. Pat. No. 5,028,876 (Cadwell)

[p13] U.S. Pat. No. 5,048,165 (Cadwell)

[p14] U.S. Pat. No. 4,679,434 (Stewart)

[p15] U.S. Pat. No. 5,095,750 (Suzuki *et al.*)

Scientific papers:

[a1] K. Warren, Navigation **38**, 91 (1991).

[a2] K.D. Wise, in Proceedings of the Workshop Advances in Analogue Circuit Design, Katholieke Universiteit Leuven, April 1993.

[a3] Y. de Coulon *et al.*, Design and Test of a Precision Servoaccelerometer with Digital Output, The Proceedings of the 7th International Conference on Solid-State Sensors and Actuators, pp. 832–835, 1993.

Cited publications [p1 – p10] describe capacitive pressure transducer structures in which the silicon diaphragm acting as the transducing electrode is flexible relative to a rigid metal electrode. Cited patents [p1, p10] disclose particularly a transducer structure suited for measuring the pressure difference imposed on the transducer diaphragm by the pressures acting on the different sides of the diaphragm. Such a transducer structure is termed a differential pressure transducer.

Prior-art differential pressure transducer constructs can be divided into asymmetrical and symmetrical structures. In an asymmetrical structure [cf. p1, p8], the capacitance change is measured only between the pressure-sensitive diaphragm and a single metal electrode. In a symmetrical structure [cf. p1, p4, p10], the capacitance measurement is performed between the pressure-sensitive diaphragm and metal electrodes placed on both sides of the diaphragm, which arrangement renders differential capacitance measurement possible.

In structures based on the flexure of the pressure-sensitive diaphragm under pressure, temperature dependence is approximately a linear function of the deflection of the diaphragm. A major portion of the temperature dependence in a symmetrical differential pressure transducer structure is constituted by the difference of the thermal expansion constants of the silicon diaphragm and the substrate.

The measurement circuit in which the differential pressure transducer is employed is based on conventional capacitance measurement. Numerous measurement techniques are known. In a measurement circuit employing a symmetrical differential pressure transducer, a transfer function is obtained which is proportional to differential capacitance. A benefit thereof is that a vastly improved linearity results about the zero point in relation to an asymmetric transducer structure.

The literature of the art recognizes measurement systems for silicon micromechanical structures [cf. p14, p15, a1] based on the force equilibrium principle. The mechanical force acting on the transducer is compensated by an electrostatically controllable force. The mutual force of attracttion generated by an electric field between two electrodes can be computed from the equation:

$$F_{electric} = \int_A \frac{\epsilon_0 \epsilon_r U^2 dA}{2d^2} \quad ,$$

where U is the electrical potential difference between the electrodes, d is the distance between the electrodes, dA is an infinitesimal area element of the electrode surface and $\varepsilon_0\varepsilon_r$ is the dielectric constant of the insulating medium. Characteristically, the voltage-force transfer function is nonlinear relative to the feedback voltage. However, in a symmetrical structure the transfer function can in principle be linearized using two different techniques. When the metal electrodes 74 are biased as illustrated in Fig. 7b by applied voltages 72 (V_{bias}) and 73 ($-V_{bias}$) and a feedback voltage 71 (V) is applied to the center electrode 75, the resulting electrostatic net force is

$$F_{electric} = \int_A \frac{\epsilon_0 \epsilon_r (V+V_{bias})^2}{2d^2}\, dA - \int_A \frac{\epsilon_0 \epsilon_r (V-V_{bias})^2}{2d^2}\, dA = \int_A \frac{2\epsilon_0 \epsilon_r V V_{bias}}{d^2}\, dA \quad .$$

The voltage applied to the center electrode 75 is taken to a preamplifier for further processing. High-pass filtering of the measurement signal is provided by an RC circuit 78.

An alternative possibility illustrated in Fig. 7a is to connect the bias voltages 72 (V_{bias}) and 73 ($-V_{bias}$) to the metal electrodes 74, then to sum the electrostatic force feedback voltage 71 (V) to the electrodes, and to take the center electrode 75 to ground potential via a resistor 77. The outcome is exactly the same as in the first arrangement: the electrostatically imposed force is a linear function of the voltage applied between the electrodes. The output voltage of the preamplifier 76 is taken to a feedback circuit (not shown). The feedback circuit is configured to control the output voltage to zero.

The electrostatic feedback force can also be generated by means of a pulsed voltage. If the pulse rate of the applied voltage is essentially above the transducer dynamic response cutoff frequency (that is, the lowest natural frequency of the transducer), the transducing electrode is subjected to an average electrostatic force

$$F_{av} \approx \frac{\epsilon_0 \epsilon_r}{2d^2} \cdot U_{pulse}^2 \cdot T_{pulse} \cdot f_{pulse}$$

where U_{pulse} is the pulse height, T_{pulse} is the pulse width and f_{pulse} is the frequency (repetition rate) of the pulsed control voltage. The electrostatic feedback force can then be controlled by modulating the pulse height, width and/or rate. When using constant-amplitude pulses with either pulse-width or pulse-rate modulation, a linear relationship is obtained between the pulse width or rate and the average electrostatic force [cf. a3, p15]. The feedback arrangement for the transducer according to the invention can be implemented using either a DC voltage or a pulsed voltage. Feedback by means of a pulsed control voltage is particularly applicable to asymmetric structures facilitating a linear transfer function.

Electrostatic force feedback has been applied to measurement circuits built around micromechanical acceleration transducers. The same principle can obviously be employed in measurement circuits built around differential pressure transducers. For a symmetrical transducer controlled to the force equilibrium, the output voltage is

$$V_{out} \approx \frac{g^2}{2\epsilon_r \epsilon_0 V_{bias}} \Delta p \quad ,$$

where Δp is the differential pressure acting across the diaphragm and g is the gap distance between the electrodes. If a control voltage span of ± 10 V is available and a differential pressure measurement range of ± 500 Pa is desired, the mutual distance between the electrodes shall be 2 µm or less. In practice, such small dimensions required and the narrow differential pressure range available have curtailed the application of an electrostatic force feedback-controlled differential pressure transducer. However, a differential pressure transducer based on controlled force equilibrium excels by its linearity and low temperature dependence, since the diaphragm profile can be kept unflexed by virtue of the applied feedback.

The above-given equation is, however, valid for an ideal transducer structure alone; namely, the mutual distances of the transducer pressure-sensitive diaphragm 75 to both electrodes 74 must be equal. If the mutual distances of diaphragm to the electrodes are unequal, the result is that the zero position of the difference capacitance $\Delta C = C_1 - C_2$ does not coincide with the unflexed position of the transducer diaphragm. Any deviation from the ideal condition causes higher temperature dependence and nonlinearity of the transducer.

In a feedback-controlled micromechanical transducer, two separate metal electrodes are preferably used: a first electrode for feedback and a second electrode for capacitance measurement [cf. p15, a2]. This arrangement aims at a more straightforward measurement circuitry by virtue of separating the feedback voltage and the measurement signal from each other.

It is an object of the present invention to achieve an entirely novel type of capacitive transducer with feedback by means of an electrostatic force and a method for controlling the profile of the active element in the transducer.

The invention is based on fabricating at least approximately equal effective areas for the second, fixed subelectrodes which are used for measuring the profile of the transducing element and controlling the same to an exactly defined geometric profile.

Analogously, the method according to the invention is based on controlling the transducing element to an exactly defined geometric profile.

Therefore, in accordance with the present invention, there is provided a capacitive transducer feedback-controlled by electrostatic force, comprising

- a body part,
- a transducing element sensitive to a variable being measured, said tranducing element being attached to said body part, said transducing element further being electrically conductive at least on its surface to form a first electrode of the transducer, said transducing element comprising a substantially planar diaphragm sensitive to a difference of pressures applied to two sides of said diaphragm, and
- at least two second electrodes which are provided on the body part and which are aligned substantially concentrically and substantially parallel to the transducing element and placed on a same side with respect to the transducing element, the second electrodes having at least substantially equal effective areas to enable measuring a profile of the transducing element and controlling of the same to an exactly defined geometric state, and
- a feedback control means arranged to keep the diaphragm unflexed.

Also in accordance with the present invention, there is provided a method for controlling a transducer suited for feedback-control by electrostatic force, said transducer comprising

- a body part,
- a transducing element sensitive to a variable being measured, said transducing element being attached to said body part, said transducing element further being electrically conductive at least on its surface to form a first electrode of the transducer, said transducing element comprising a substantially planar diaphragm sensitive to a difference of pressures applied to two sides of said diaphragm, and
- at least two second electrodes which are provided on the body part and which are aligned substantially parallel to the transducing element and placed on a same side with respect to the transducing element,

said method aiming to control the transducing element to its nondeviated position by keeping said transducing element of the transducer in a nondeviated, unflexed state and comprising measuring a profile of the tranducing element, and then using a profile measurement information for feedback-controlling electrostatic forces imposed between said transducing element and said second electrodes.

The invention offers significant benefits.

By controlling the transducing element to an unflexed state, the undesirable temperature sensitivity of a capacitive transducer can be minimized. By virtue of the nonrestricted control of the transducing element profile,

the effect of any dominating error source can be minimized as desired. The approach according to the invention reduces the error exactly to a second order effect. A feedback system according to the invention for controlling the transducing element profile further prevents changes in the dielectric properties of the transducer material from affecting the geometric status of the feedback-controlled measurement setup.

In the following, the invention will be examined in more detail by means of exemplifying embodiments with reference to the attached drawings, in which:

Figure 1 is a top view of an electrode layout according to the invention;

Figure 2 is a top view of another electrode layout according to the invention;

Figure 3 is a diagrammatic side view of a symmetric transducer structure according to the invention;

Figure 4 is a top view of a third embodiment of an electrode layout according to the invention;

Figure 5a is a diagrammatic side view of a symmetrical acceleration transducer structure according to the invention;

Figure 5b is a diagrammatic top view of the symmetric acceleration transducer structure illustrated in Fig. 5a sectioned at the level of the upper electrodes;

Figures 6a–6b are graphs illustrating the capacitance of transducers according to the invention as a function of differential pressure imposed on the transducer;

Figures 7a–7b are block diagrams of two alternative embodiments of the feedback electronics circuitry for a symmetrical transducer according to the invention;

Figures 8a–8b are block diagrams of two alternative embodiments for implementing the measurement circuitry of an asymmetric transducer according to the invention; and

Figures 9a–9b are side views of two alternative embodiments for implementing a matrix electrode structure according to the invention.

According to the invention, the second, fixed, metallic electrodes fabricated to the transducer body part are divided into at least two sets of subelectrodes so that the feedback signal is taken common to all sets of subelectrodes, while the sensing measurement signal is applied to the different subelectrodes using desired mutual differential phase shift and amplitude. The differential phase and amplitude control of the sensing measurement signal makes it possible to implement a transfer

function that performs appropriate weighting of the different parts of the transducer diaphragm. As a special case the diaphragm surface can be divided into two concentric zones with equal areas. In Figs. 1, 2 and 3 such metal electrode shapes are shown for circular and square electrode geometries.

The embodiment shown in Fig. 1 comprises a circular center electrode 2 encircled by an annular electrode 1. The electrodes 1 and 2 have equal areas. Obviously, the areas may vary within the manufacturing tolerances.

The embodiment shown in Fig. 2 correspondingly comprises a square center electrode 4 enclosed by a square-frame-shaped electrode 3.

A third embodiment of an electrode structure according to the invention is shown in Fig. 4 having the center electrode 22 circular in the same manner as in Fig. 1, and this circular electrode is concentrically enclosed by an electrode 21 having an annular inner perimeter and a square outer perimeter. This geometry offers maximization of the center electrode 22 sensitivity for the measured variable in a structure having a square (not shown) transducing diaphragm supporting the center electrode.

With reference to Fig. 3, a measurement configuration is shown in which three different transfer functions can be realized by feeding the sensing signal e_s to the electrodes of the illustrated structure either in-phase or out-of-phase. The different transfer functions are the following:

$$V_{out}^{(1)} = \frac{(C_6 + C_5) - (C_8 + C_7)}{C_6 + C_5 + C_8 + C_7} e_s \quad ;$$

$$V_{out}^{(2)} = \frac{(C_6 - C_8) - (C_7 - C_5)}{C_6 + C_5 + C_8 + C_7} e_s \quad ;$$

$$V_{out}^{(3)} = \frac{(C_6 - C_5) + (C_8 - C_7)}{C_6 + C_5 + C_8 + C_7} e_s \quad ,$$

where e_s is the sensing signal amplitude, C_6 is the capacitance between the fixed electrode terminal *6* and output electrode terminal *10*, C_8 is the capacitance between the fixed electrode terminal *8* and output electrode terminal *10*, C_5 is the capacitance between the fixed electrode terminal *5* and output electrode terminal *10* and C_7 is the capacitance between the fixed electrode terminal *7* and output electrode terminal *10*. The sensing measurement signal is in case (1) taken in-phase to electrode terminals 6 and 5 and out-of-phase to electrode terminals 8 and 7; in case (2) the sensing measurement signal is taken in-phase to electrode terminals 6 and 7 and out-of-phase to electrode terminals 5 and 8; in case (3) the sensing measurement signal is taken in-phase to electrode terminals 6 and 8 and out-of-phase to electrode terminals 5 and 7.

Alternatively, the electrostatic force feedback signal taken to the above-described metal electrode structure is applied at different control voltage levels to the different zones of the electrode structure. This arrangement facilitates a broader control of the sensing electrode contour.

By virtue of the electrode arrangement, the pressure-sensitive silicon diaphragm 9 can be kept unflexed even if the gap distances of the capacitor cavities at opposite sides of the diaphragm are different. Besides, the electrode structure facilitates the control of the diaphragm contour in an asymmetric transducer. Thus, the temperature dependence of the transducer can be minimized through controlling the diaphragm to an unflexed state. According to a preferred embodiment of the invention, the metal electrodes are divided into two concentric zones of equal areas as shown in Figs. 1, 2 and 4. Simple measurement of the electrode structure

capacitances C_6 and C_5 or C_8 and C_7 tells that when the capacitances measured at the same side of the diaphragm are equal, the diaphragm is parallel to the fixed metal electrode. As the diaphragm is flexed under applied pressure, the sensitivity of the center zone capacitance to pressure is appreciably higher than that of the outer zone, and the capacitance difference is detectable.

With reference to Fig. 6a, the capacitances C_6, C_5, C_8 and C_7 as well as their differences $(C_6 - C_5) - (C_8 - C_7)$ and $(C_6 - C_5) + (C_8 - C_7)$ as a function of the differential pressure over the diaphragm are shown for ideally equal gap distances of the capacitors at opposite sides of the diaphragm. With reference to Fig. 6b, the same function is shown for an asymmetrical case. The asymmetry is 100 nm. It can be seen that the capacitance difference $(C_6 - C_5) - (C_8 - C_7)$ becomes zero for a zero flexure of the diaphragm. The minimum value of the capacitance difference $(C_6 - C_5) + (C_8 - C_7)$ and zero crossing point of the derivative thereof also coincide with the situation of zero flexure of the diaphragm. The values of the transfer functions $^{(2)}$ and $^{(3)}$ of the above-described system are zero when the membrane is parallel to the metal electrodes. Moreover, the transfer function $^{(2)}$ is monotonous and thus suited as the indicator of the membrane flexure.

The transducer shown in the diagrams has a square geometry with the metal electrodes shaped as shown in Fig. 2. The transducing diaphragm diameter is 2.4 mm, thickness 10 μm and gap distances of capacitor cavities at both sides 2 μm. The outer metal electrode diameter is 2.2 mm and the inner approx. 1.5 mm.

The most critical dimension in the transducer structure in terms of feedback control is the gap of the capacitor cavity. An assumption is initially made that a control voltage span of ±15 V is available. Then, such a transducer structure in which the capacitor cavities have a gap distance of 2 μm can be used for pressure measurements over a range of ±1000 Pa. The pressure range is directly proportional to the second power of the control voltage and inversely proportional to the second power of the capacitor cavity gap distance. The capacitor cavity gap must

be made narrower than 4 μm in order to keep the feedback control voltage limited to a reasonable value and simultaneously achieve a sufficiently large dynamic measurement range. The diaphragm diameter can typically be varied in the range 1 – 4 mm and the diaphragm thickness is typically below 40 μm.

Given certain changes in the transducer geometry, the above-described principles are also applicable to the measurement circuitry design of an acceleration transducer or any other micromechanical transducer based on a moving element. With reference to Fig. 5, an example thereof is illustrated for the case of an acceleration transducer based on a reference mass 36 supported by a bending cantilever beam 37. Differently from the differential pressure transducer, the sensing electrode structure comprises two equal area parts 31, 32 and 33, 34, which are adjacent to each other. By measuring the differential capacitances of electrodes 31, 32, 33, 34 to the reference mass 36 via the common output electrode 35, it can be told that the reference mass beam 36 is unbent when the differential capacitance of two capacitors (e.g. $C_{31} - C_{32}$) measured from the same side of the beam is zero.

With reference to Fig. 5b, the electrodes 31 and 32 on the same side of the reference mass 36 must be symmetrically aligned relative to the longitudinal center axis 38 of the reference mass supporting beam.

With reference to Figs. 7a and 7b, a basic block diagram of the feedback control circuit for a feedback-controlled silicon differential pressure transducer is shown. It must be noted, however, that the electrode structure illustrated in the diagrams with only one fixed electrode 74 to both sides of the transducing diaphragm 75 is not suited for a practical implementation of the arrangement according to the invention. Therefore, the diagrams must be understood as mere illustrations of the feedback principle alone. Accordingly, a voltage proportional to the difference of the sensing capacitors is detected from the transducer. The detected voltage is fed to a feedback control circuit whose output voltage is taken back to the transducer. In a force equilibrium, the force accomplished by means of the electric field com-

pensates the mechanical force imposed by the differential pressure on the transducing diaphragm. This principle was already discussed in detai in the general part of the description above.

With reference to Fig. 8a, an AC voltage is taken from a drive signal source 88 to the fixed electrodes 85 and 84 of an asymmetric transducer structure 80. The polarity of the signal taken to electrodes 84 is inverted by means of an inverting amplifier 86. The transducing membrane 83 is taken via a resistor 87 to ground potential. The capacitance difference of the capacitors formed between the transducing diaphragm 83 and the electrodes 85 and 84 is detected by means of a phase-sensitive detector, whose output signal 91 is taken to a feedback circuit (not shown) suited to control the transducing diaphragm 83 to a desired geometric state.

With reference to Fig. 8b, an electric pulse generator 90 is employed to feed the electrodes 84 and 85 with a sensing voltage so that the pulse polarity to the electrode 84 is inverted by means of an inverting amplifier. The difference of capacitances $C_{83,85}$ and $C_{83,84}$ is detected by means of a charge amplifier 89, whose output 91 gives a voltage proportional to the charge difference of the capacitances, and this output voltage information is used for the feedback control of the transducer 80 via electrostatic forces imposed on the transducing element.

An example for the application of the technique according to the invention to a more complicated control of transducing diaphragm contour is given in Figs. 9a and 9b illustrating an undulated diaphragm in which the undulations are generated onto an initially flat diaphragm. Such an arrangement is in principle realizable in two different manners:

1) With reference to Fig. 9a, a system is shown in which the capacitor gap distances are staggered in a periodic manner to different depths. Then, the capacitances measured at terminals 93 and 94 (or alternatively, at terminals 95 and 96)

become equal when the diaphragm 97 is controlled to periodic undulations. In the diaphragm contour control, the differential voltages applied to the electrode group terminals 93 and 94, as well as 95 and 96, are feedback-controlled. With reference to Fig. 9a, such a situation is attained by applying a higher voltage to electrode terminals 94 and 95 and a lower voltage to electrode terminals 93 and 96. The ratio of the effective areas of the electrodes is then determined by the ratio of the staggered depths of the capacitor gaps. The diaphragm enclosed by the capacitor system can be feedback-controlled to a desired contour by virtue of measuring the differences of the capacitances.

2) With reference to Fig. 9b, a system is shown in which an equivalent result as that described above is attained by controlling the effective area of the electrodes via the transfer function of the measurement circuit transfer function. The differential voltage control is used in the feedback circuit in a similar manner as illustrated in Fig. 9a. The undulated shape of the diaphragm 97 can be used in the control of the diaphragm tensional status. For instance, the diaphragm can be assumed to be under compressive stress initially. Then, the undulated flexing of the diaphragm 97 achieves a tensional stress that compensates the compressive stress. Thus, the stress imposed on the diaphragm can be compensated or even overcompensated to subject the diaphragm to tensional stress.

In accordance with the above-described control arrangements, a term *effective area* may be defined for the fixed electrodes of the transducer structure. The electronic circuit measuring the capacitance difference of two capacitors C_1 and C_2 can be assumed to have a transfer function of the form $\alpha C_1 - ßC_2$, where the coefficients α and ß are determined by the configuration of the measurement circuit and the capacitor gap distances. If the capacitances C_1 and C_2 are directly proportional to the areas A_1 and A_2 of the capacitors, the effective areas of the capacitors can be defined as αA_1 and $ßA_2$. Then, the dual-zone capacitor structures illustrated in Figs. 1, 2 and 4 are brought to a state of equal effective areas when the following condition is fulfilled:

$$\alpha C_1 - \beta C_2 = 0.$$

1. A capacitive transducer feedback-controlled by electrostatic force, comprising

- a body part,

- a transducing element sensitive to a variable being measured, said tranducing element being attached to said body part, said transducing element further being electrically conductive at least on its surface to form a first electrode of the transducer, said transducing element comprising a substantially planar diaphragm sensitive to a difference of pressures applied to two sides of said diaphragm, and

- at least two second electrodes which are provided on the body part and which are aligned substantially concentrically and substantially parallel to the transducing element and placed on a same side with respect to the transducing element, the second electrodes having at least substantially equal effective areas to enable measuring a profile of the transducing element and controlling of the same to an exactly defined geometric state, and

- a feedback control means arranged to keep the diaphragm unflexed.

2. A transducer as defined in Claim 1,

wherein the second electrodes have at least substantially equal areas.

3. A transducer as defined in Claims 1 or 2, wherein the second electrodes are constituted by a circular centre electrode and at least one annular electrode encircling said centre electrode.

4. A transducer as defined in any of Claims 1, 2 and 3, wherein the second electrodes comprise a square centre electrode which is surrounded by at least one square-frame-shaped electrode.

5. A transducer as defined in any of Claims 1, 2 and 3, wherein the second electrodes comprise a circular centre electrode surrounded by at least one electrode with a circular inner perimeter and square outer perimeter.

6. A transducer as defined in any one of Claims 1 to 5, wherein the second electrodes are placed on both sides with respect to the transducing element.

7. A transducer as defined in Claim 1, wherein said second electrodes are further comprised of a multiple element matrix organized into at least two sets of subelectrodes having substantially equal effective areas.

8. A method for controlling a transducer suited for feedback-control by electrostatic force, said transducer comprising

- a body part,
- a transducing element sensitive to a variable being measured, said transducing element being attached to said body part, said transducing element further being electrically conductive at least on its surface to form a first electrode of the transducer, said transducing element comprising a substantially planar diaphragm sensitive to a difference of pressures applied to two sides of said diaphragm, and

- at least two second electrodes which are provided on the body part and which are aligned substantially parallel to the transducing element and placed on a same side with respect to the transducing element,

said method aiming to control the transducing element to its nondeviated position by keeping said transducing element of the transducer in a nondeviated, unflexed state and comprising measuring a profile of the tranducing element, and then using a profile measurement information for feedback-controlling electrostatic forces imposed between said transducing element and said second electrodes.

9. A method as defined in Claim 8, further comprising adapting said second electrodes to have equal areas, measuring mutual capacitances formed between said second electrodes and said transducing element, and controlling said capacitances to equal values by means of feedback-controlling the electrostatic forces imposed between said transducing element and said second electrodes.

10. A method as defined in Claim 8, wherein the profile of the transducing element is measured with the second electrodes; and wherein said feed-back controlling comprises:

generating an electric transducer potential in the transducing element,

applying an opposed electric potential to the at least two second electrodes to generate an electric field between the transducing element and the two second electrodes, and

controlling the profile of the transducing element using at least one of the second electrodes by varying the electric transducer potential in relation to the opposed electric potential.

11. A method as defined in Claim 10, wherein the electric transducer potential indicates a sensed pressure.

12. A method as defined in Claim 10, wherein the electric transducer potential indicates a sensed acceleration.

13. A method as defined in Claim 10, further comprising the steps of providing a plurality of second electrodes having substantially equal effective areas and concentrically arranging said second electrodes.

14. A method as defined in Claim 10, further comprising the step of providing a plurality of second electrodes and utilizing a multiple element matrix of sub-electrodes for each of said second electrodes.

15. A method as defined in Claim 10, wherein the step of applying an opposed electric potential further comprises controlling said opposed electric potential by modulating the amplitude, width and/or frequency of a pulse voltage.

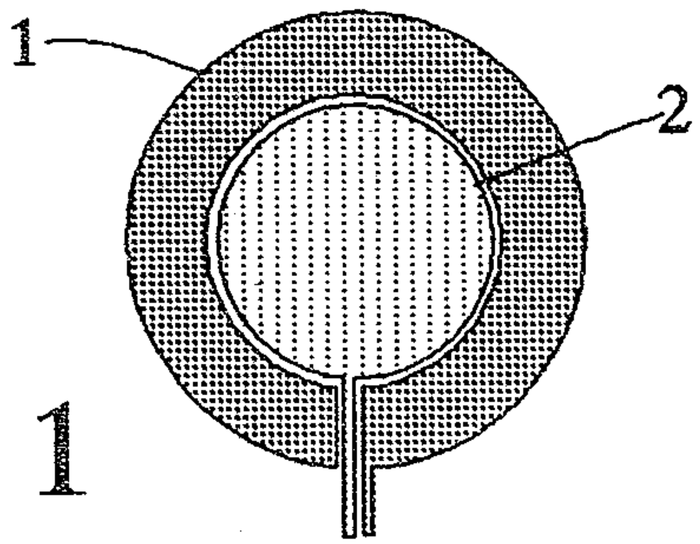

Fig. 1

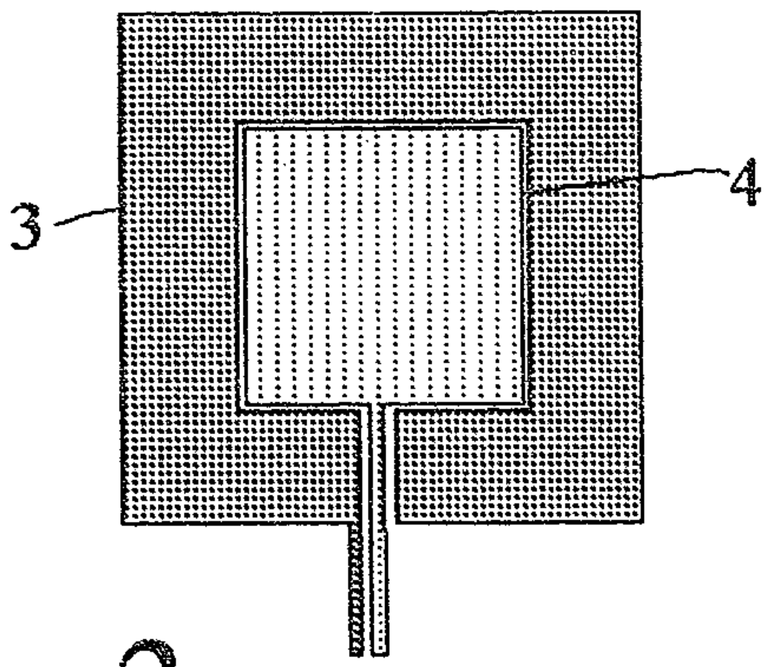

Fig. 2

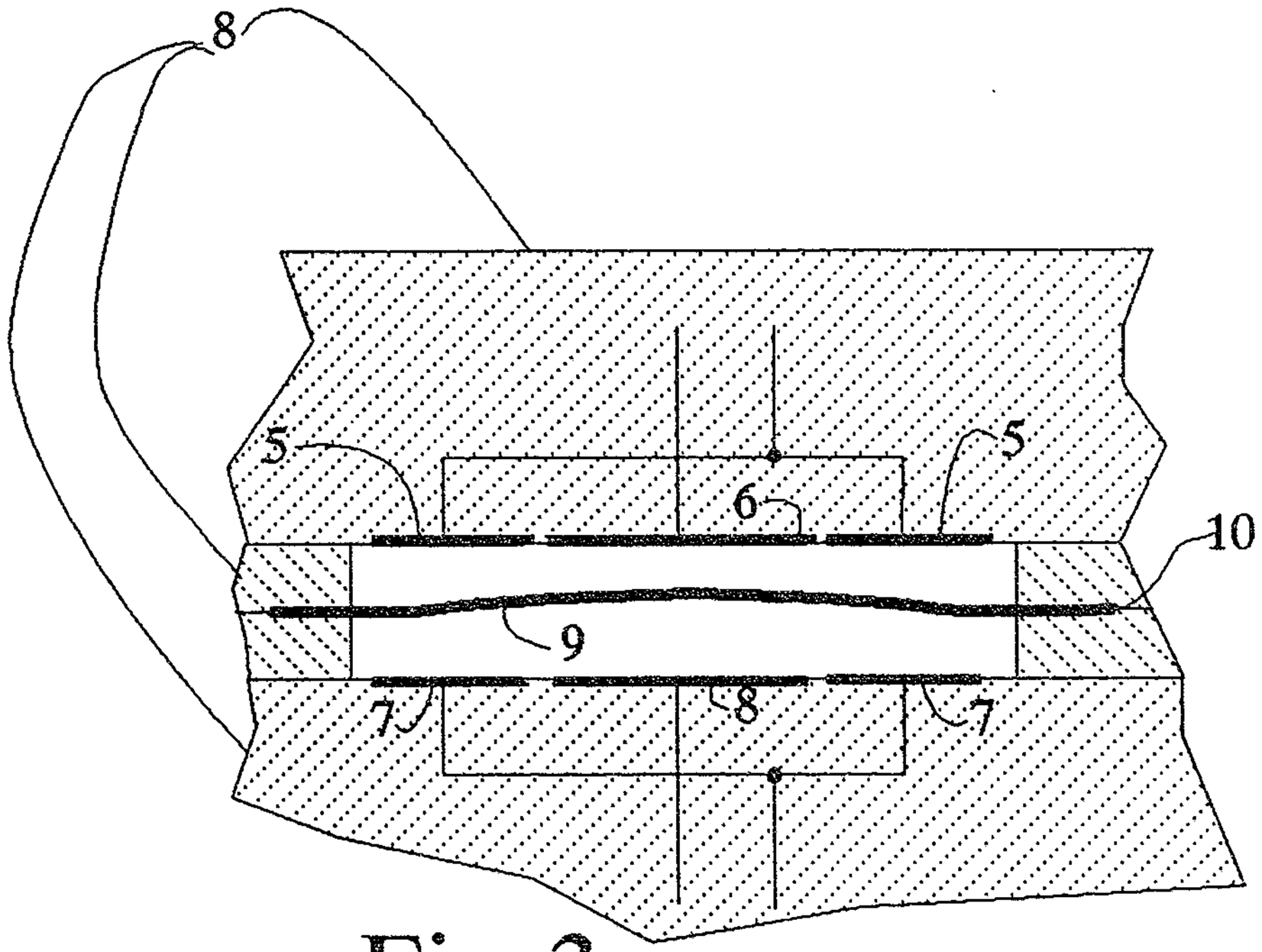

Fig. 3

2130364

PATENT AGENTS

Markey Gilroy Renault

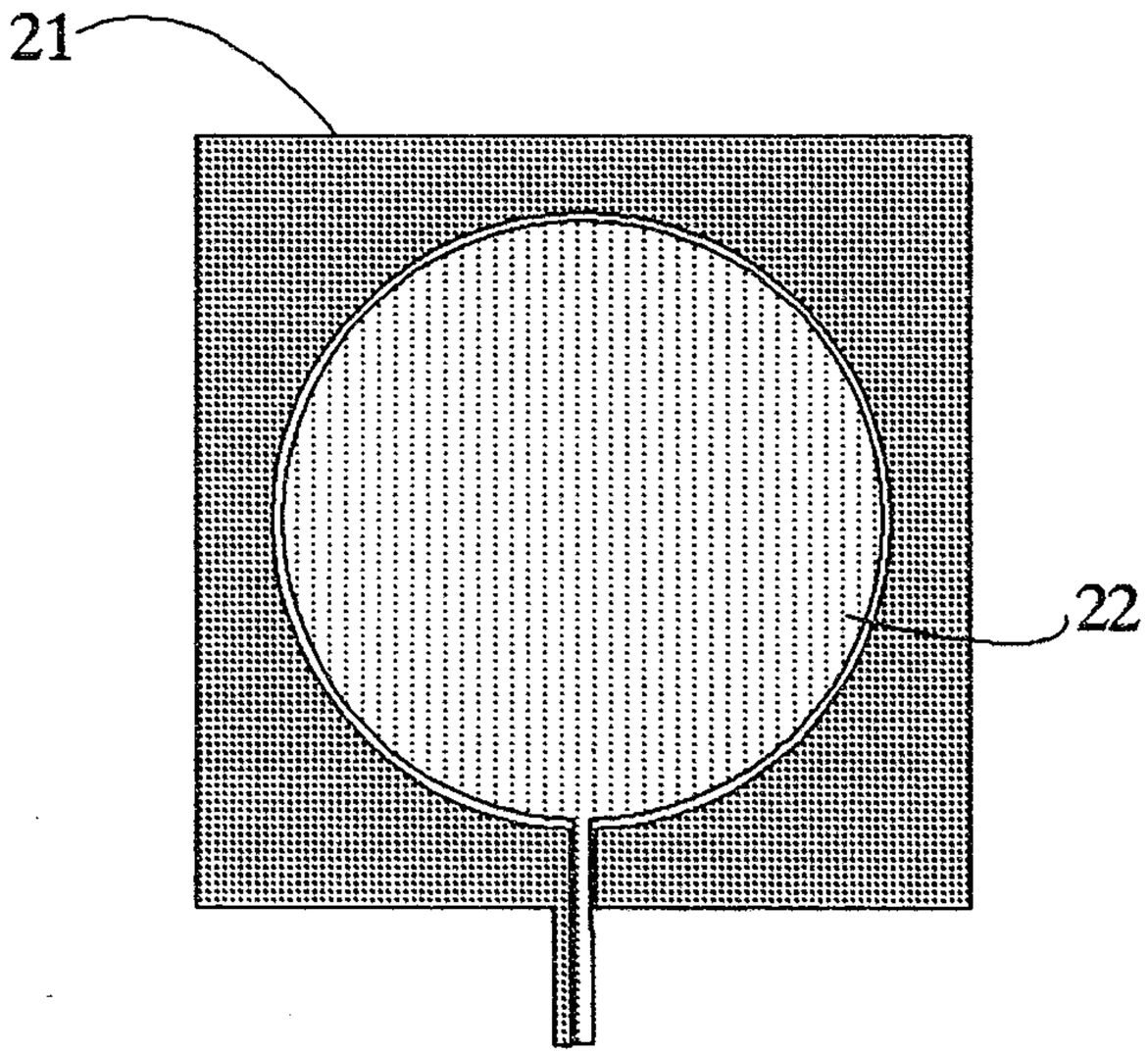

Fig. 4

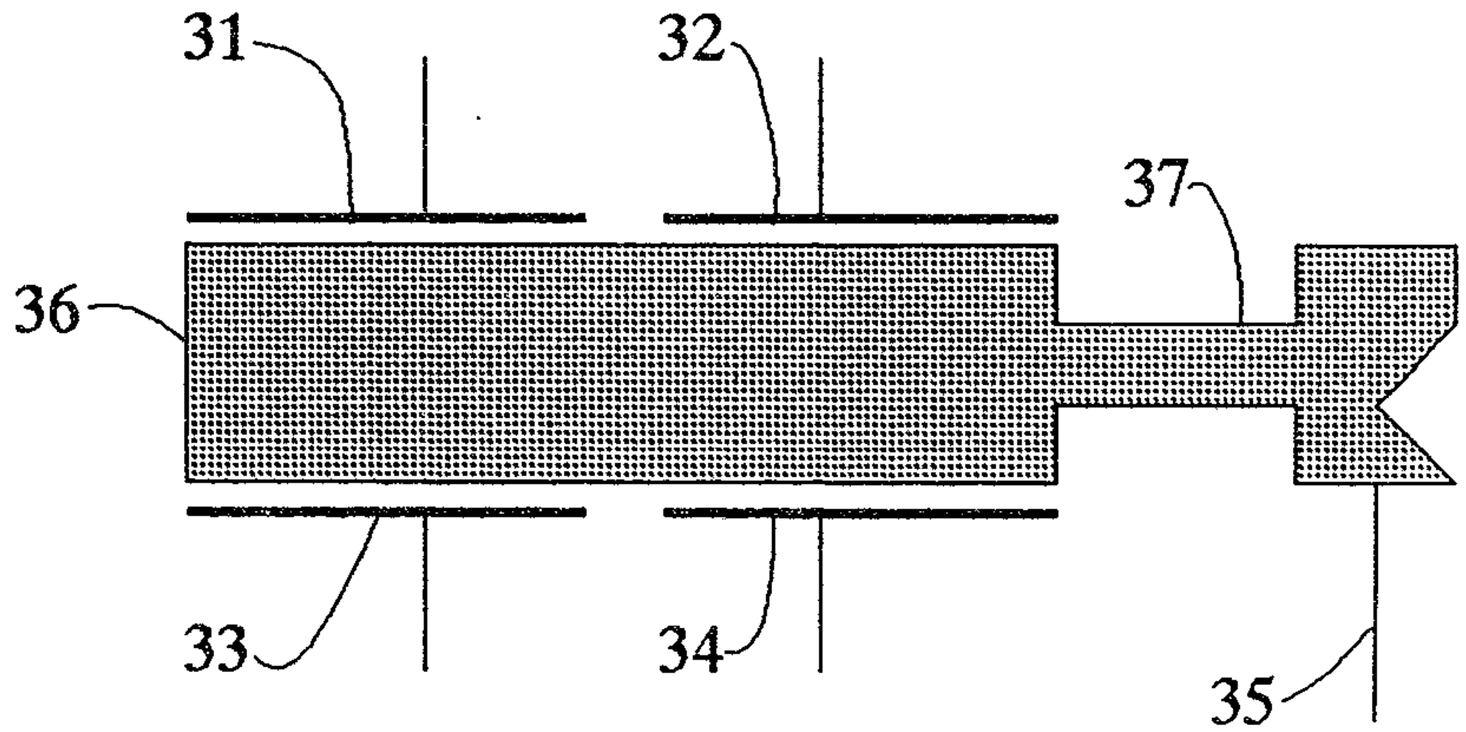

Fig. 5a

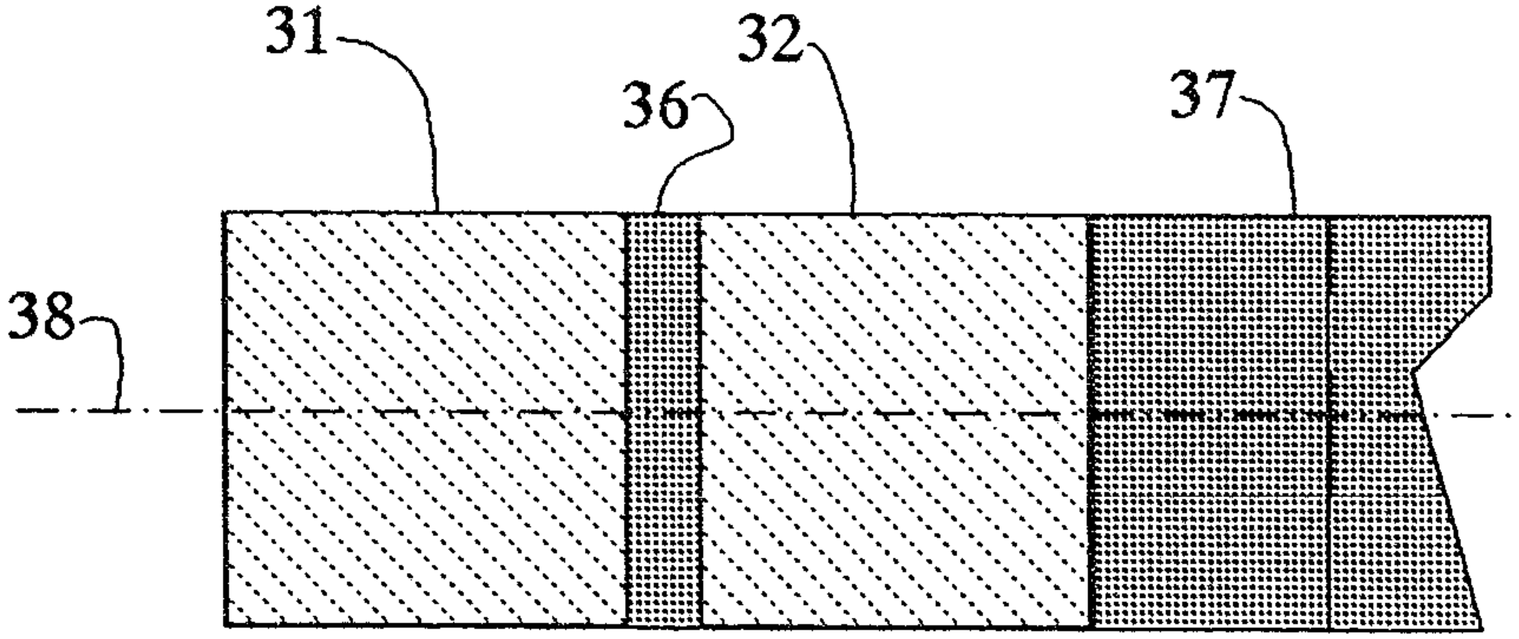

Fig. 5b

2130364

PATENT AGENTS

Ridout & Maybee

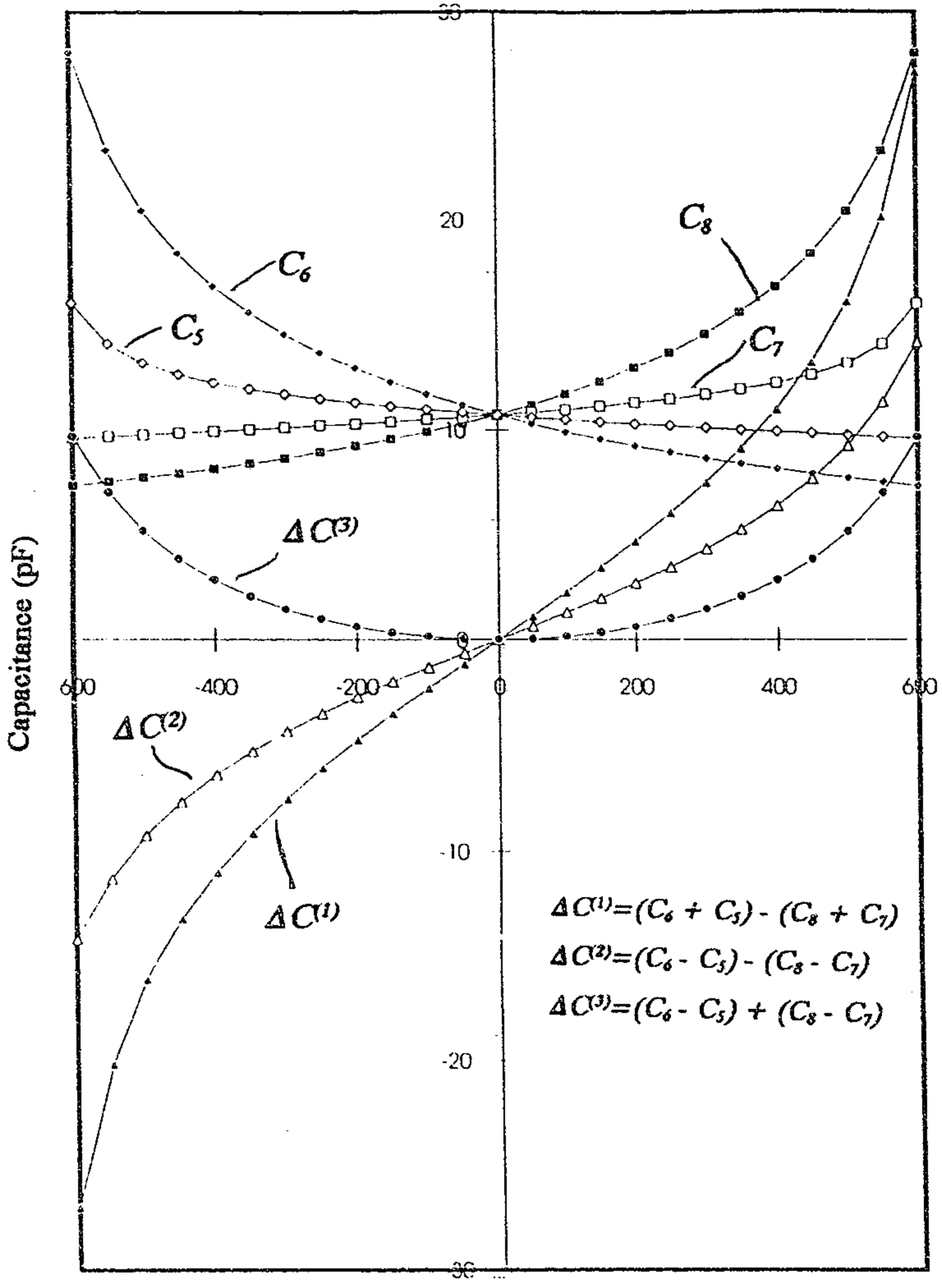

Fig. 6a

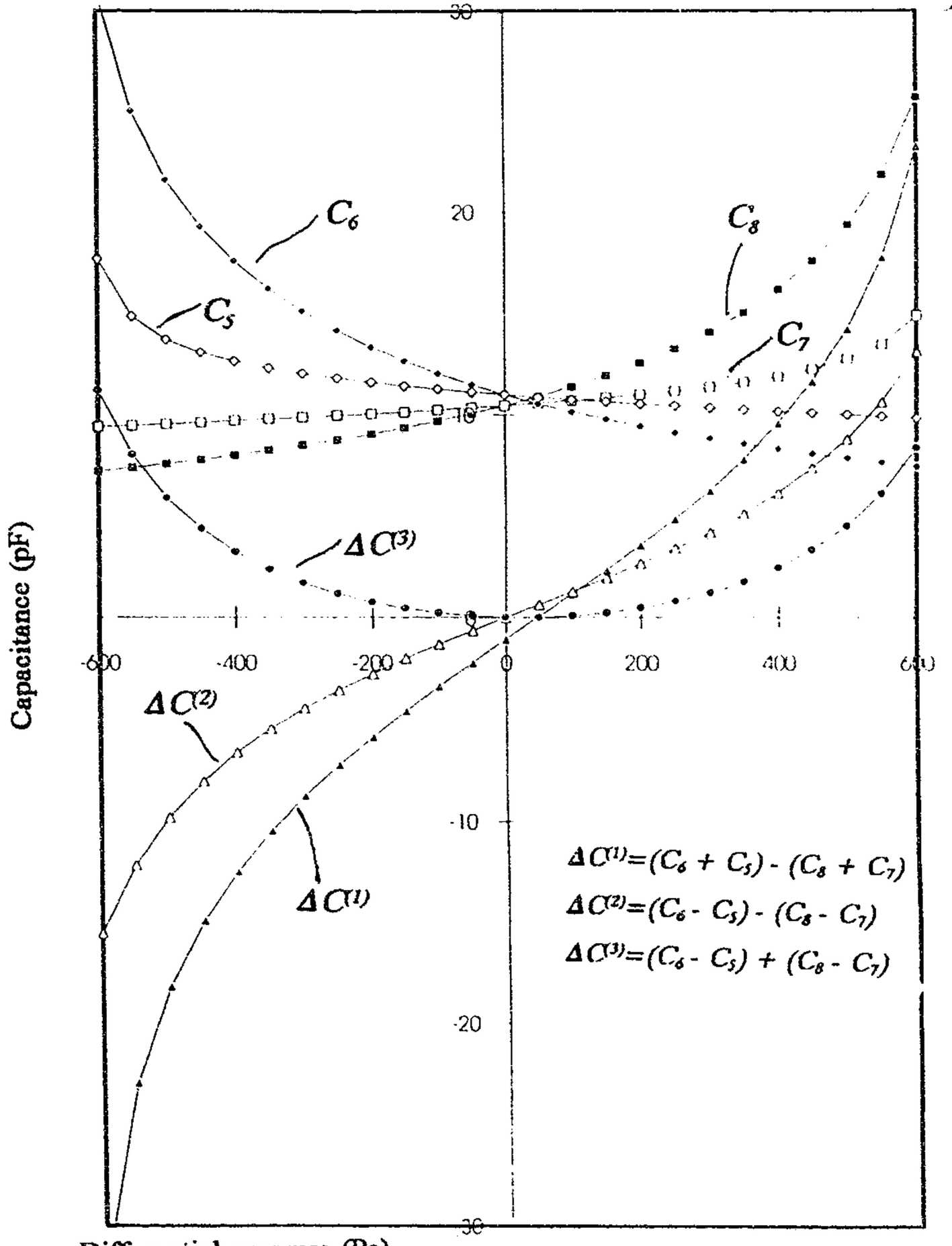

Fig. 6b

2130364

PATENT AGENTS

Swabey Ogilvy Renault

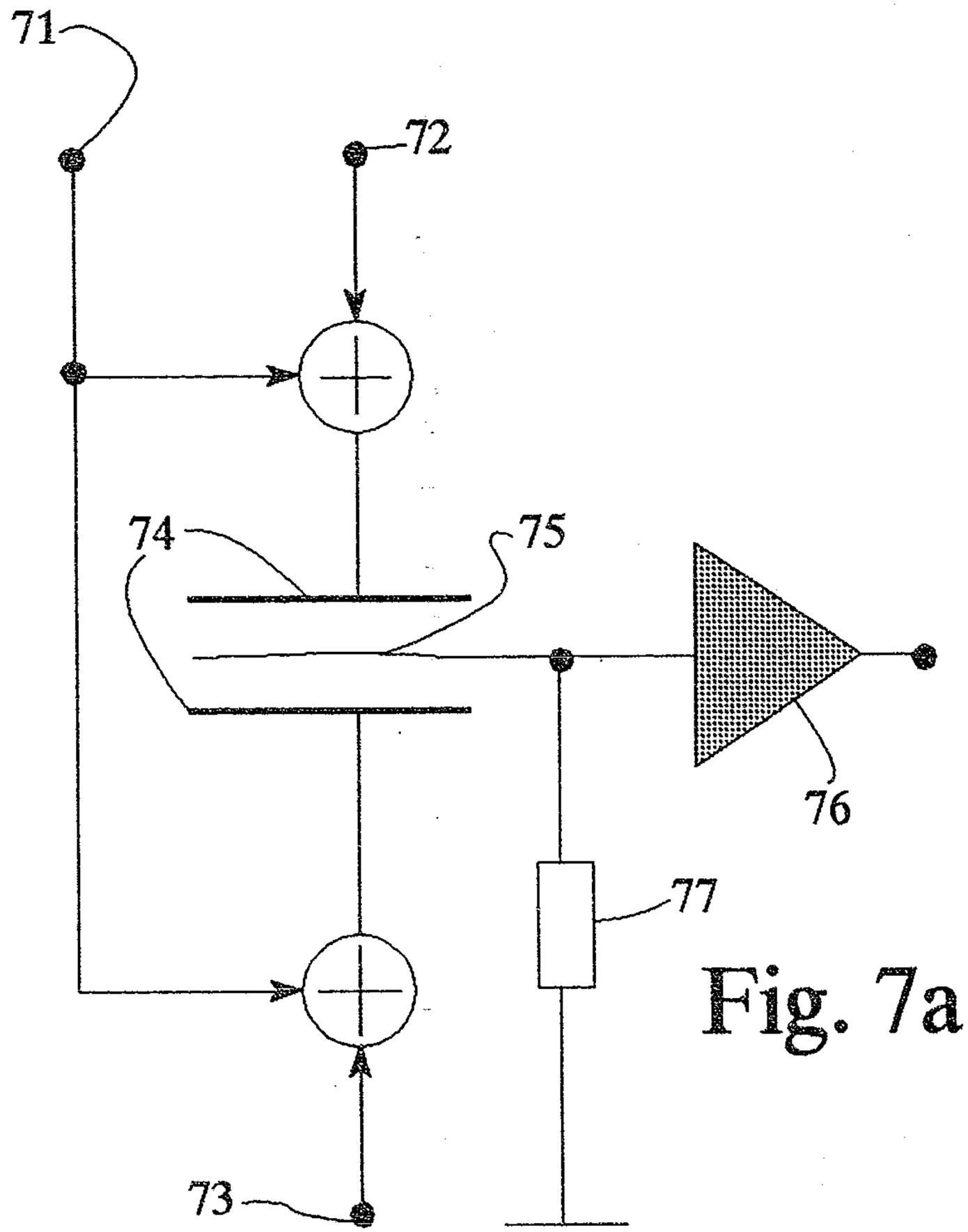

Fig. 7a

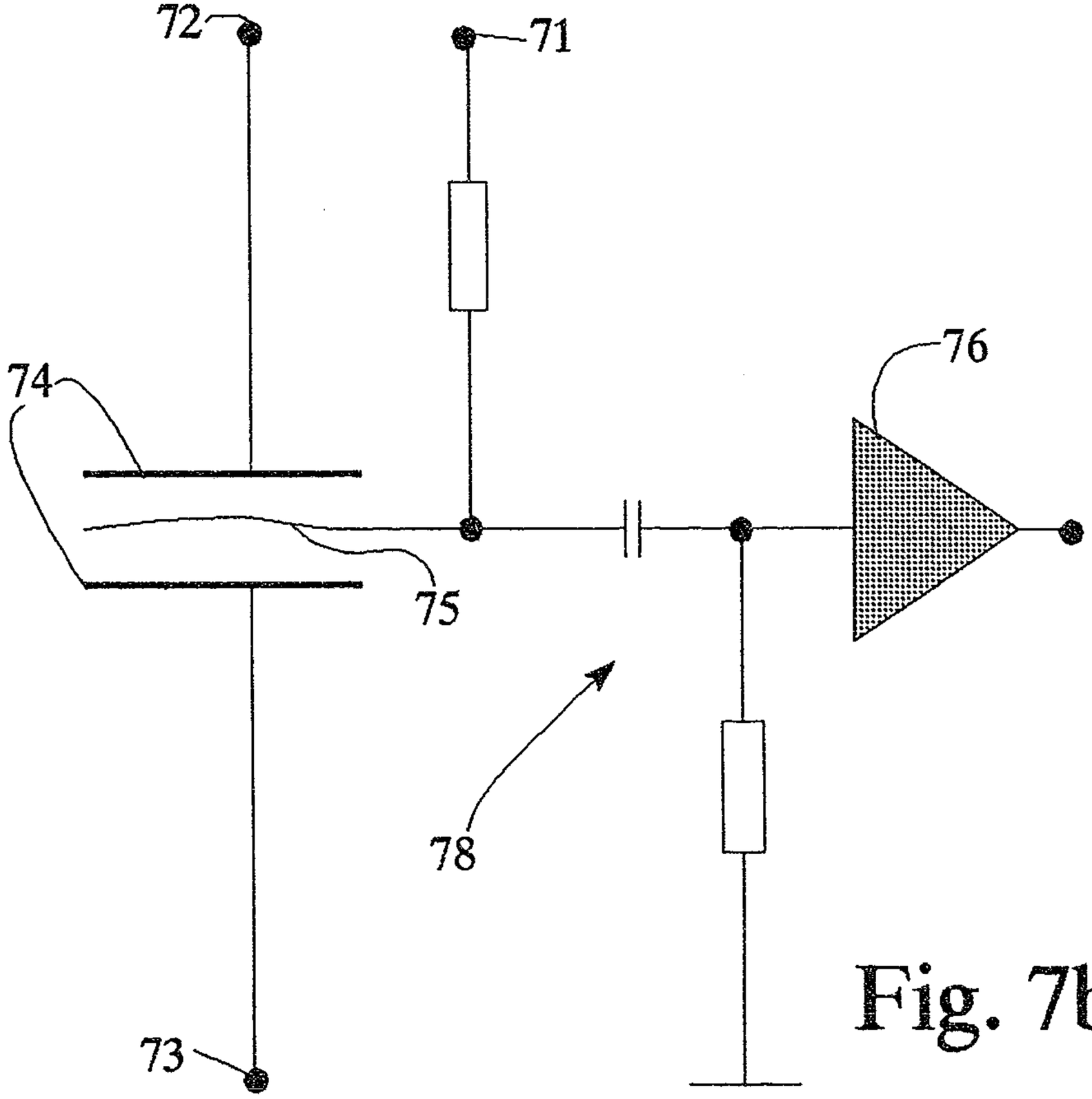

Fig. 7b

2130364

PATENT AGENTS

Ogilvy Renault

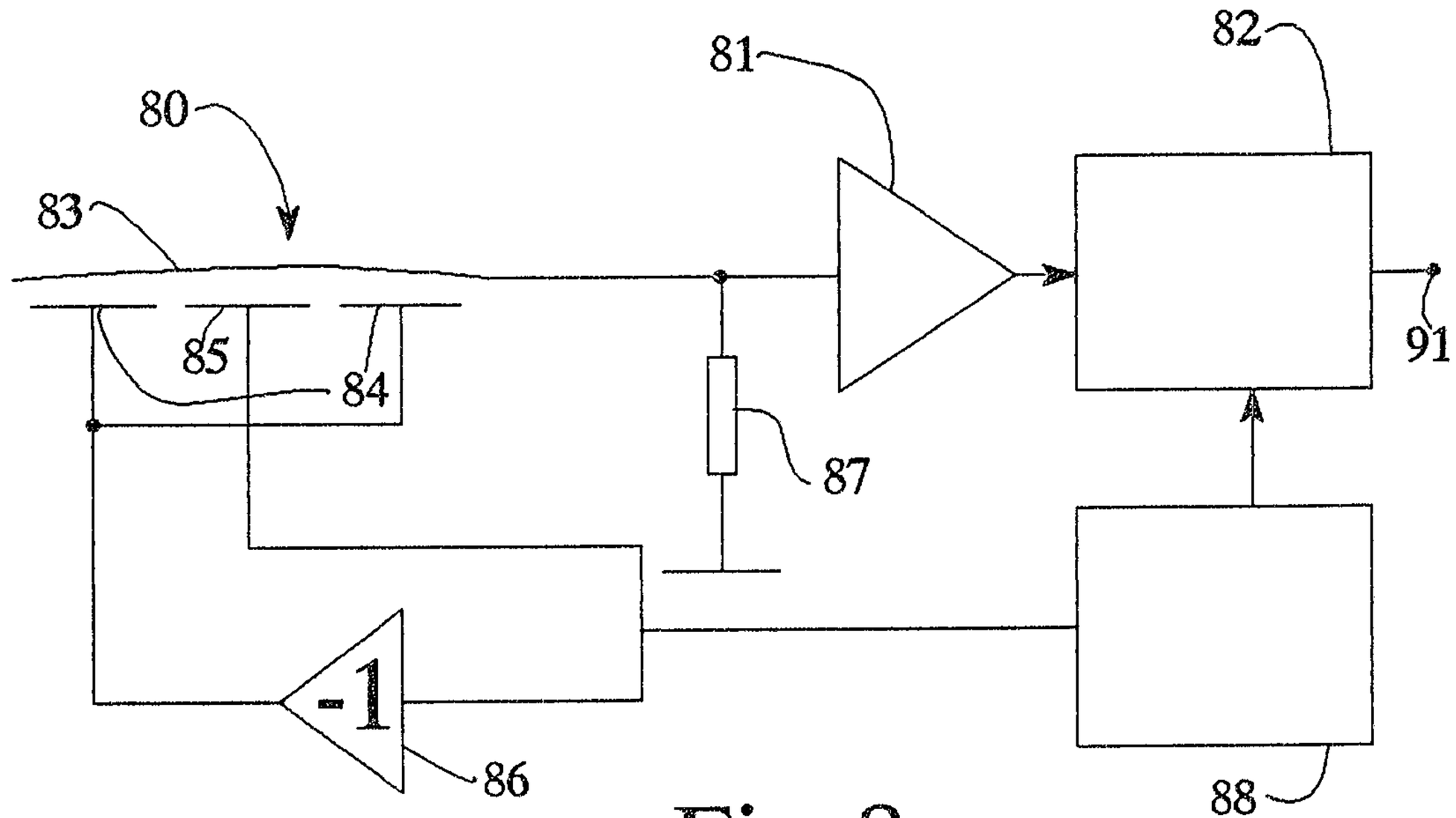

Fig. 8a

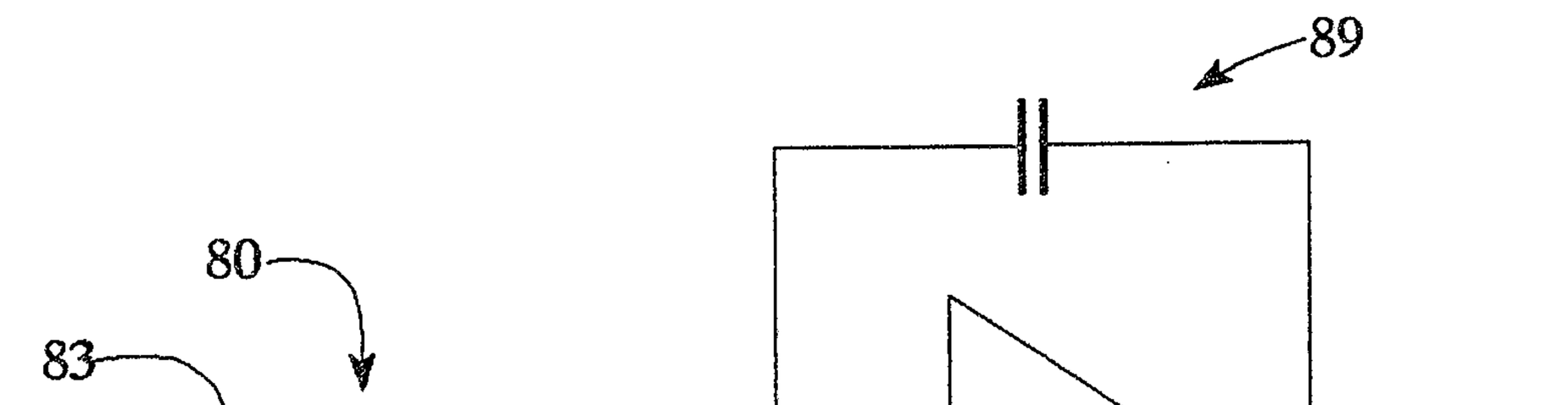

Fig. 8b

PATENT AGENTS

Ansbey Gilroy Kennedy

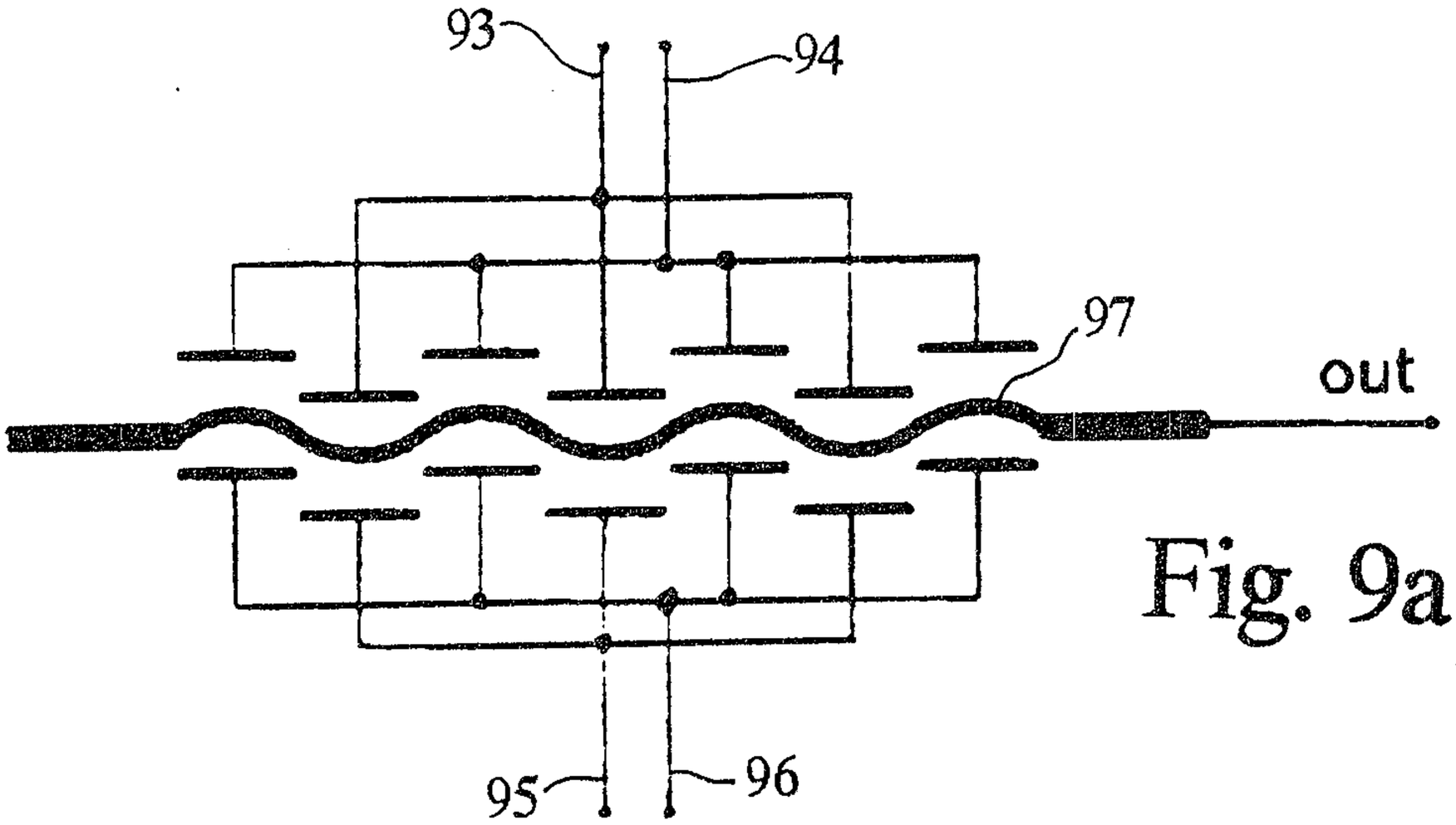

Fig. 9a

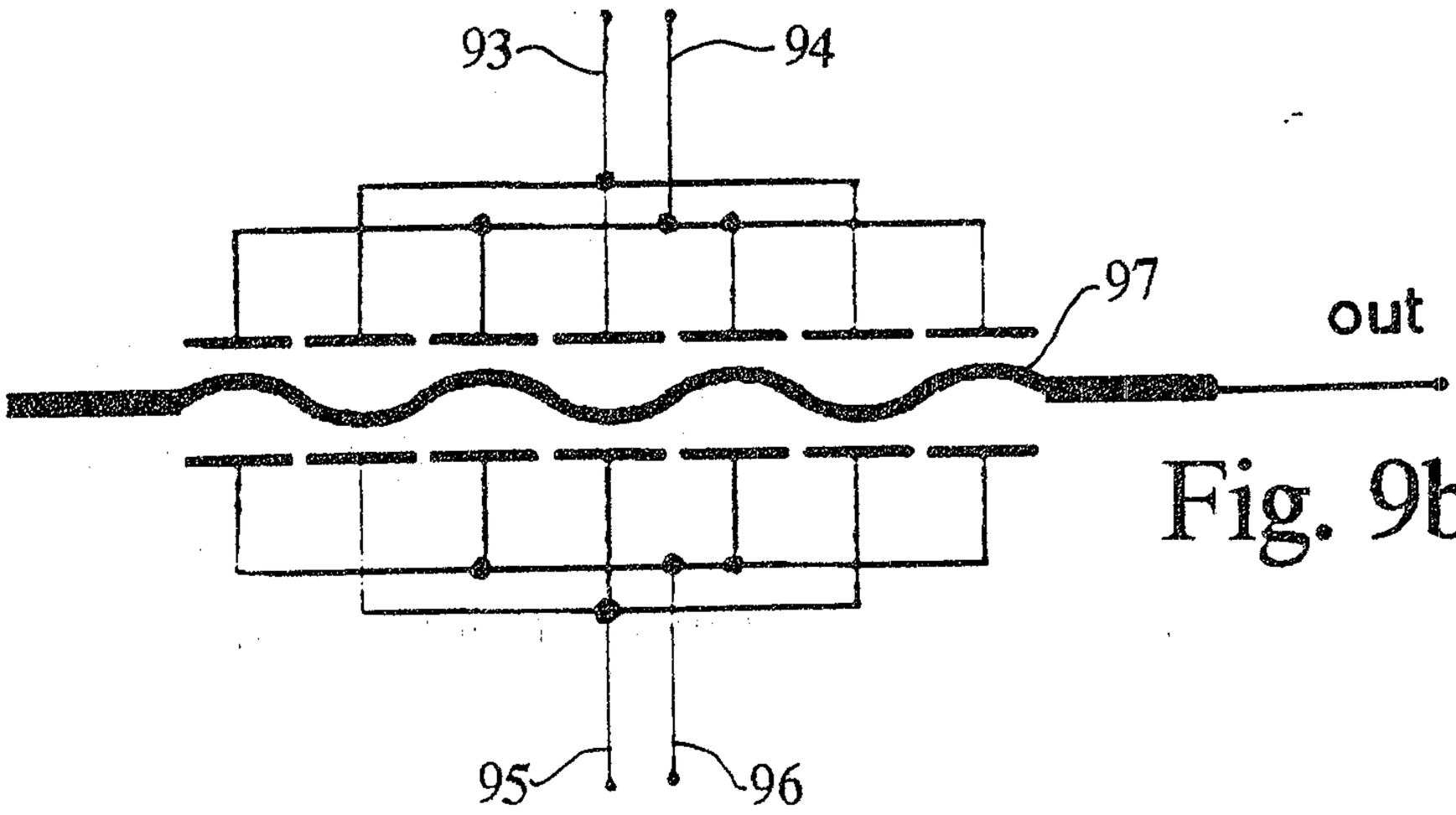

Fig. 9b

PATENT AGENTS

Marks, Ogilvy-Renault

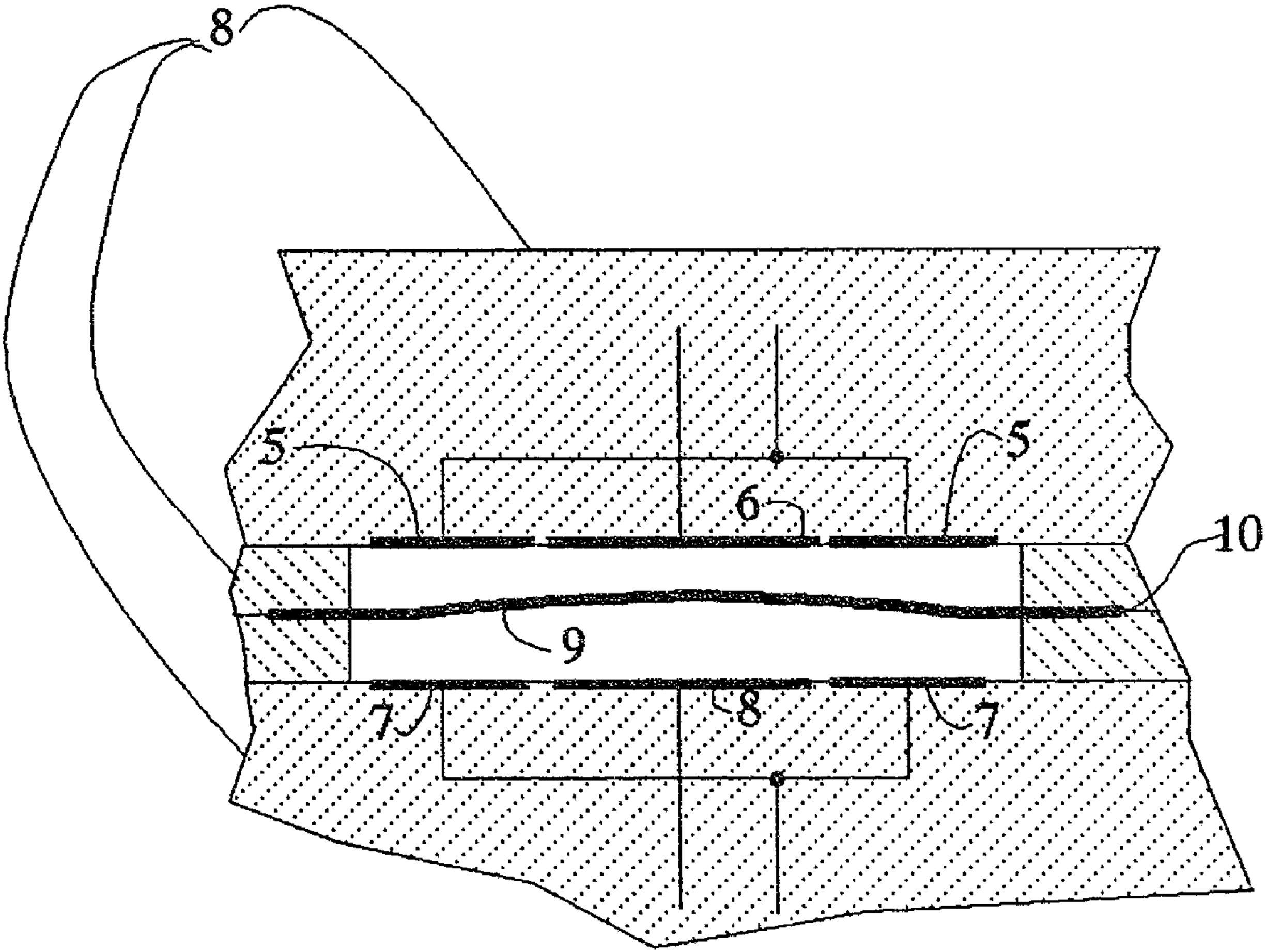
8
5
6
5
10
9
7
8
7