(19) DANMARK

(10) **DK/EP 2754548 T3**

Patent- og Varemærkestyrelsen

(12) Oversættelse af europæisk patentskrift

(51) Int.Cl.: ***B 29 C 70/54 (2006.01)*** ***B 29 B 11/16 (2006.01)*** ***B 29 C 70/38 (2006.01)***

(45) Oversættelsen bekendtgjort den: **2015-11-09**

(80) Dato for Den Europæiske Patentmyndigheds bekendtgørelse om meddelelse af patentet: **2015-10-07**

(86) Europæisk ansøgning nr.: **14161839.7**

(86) Europæisk indleveringsdag: **2011-04-15**

(87) Den europæiske ansøgnings publiceringsdag: **2014-07-16**

(30) Prioritet: **2010-04-16 DE 102010015199**

(62) Stamansøgningsnr: **12193003.6**

(84) Designerede stater: **AL AT BE BG CH CY CZ DE DK EE ES FI FR GB GR HR HU IE IS IT LI LT LU LV MC MK MT NL NO PL PT RO RS SE SI SK SM TR**

(73) Patenthaver: **Compositence GmbH, Mollenbachstrasse 25, 71229 Leonberg, Tyskland**

(72) Opfinder: **Karb, Ingo, Lerchenbergstr. 5-1, 71287 Weissach, Tyskland**
KEHRLE, Rainer, Hilpensberg Haus 2, 88630 Pfullendorf-Hilpensberg, Tyskland
WITZEL, Volker, Reinhold-Bechtle-Str. 4/1, 74369 Löchgau, Tyskland

(74) Fuldmægtig i Danmark: **PLOUGMANN & VINGTOFT A/S, Rued Langgaards Vej 8, 2300 København S, Danmark**

(54) Benævnelse: **Fremgangsmåde til fremstilling af præforme til fiberforstærkede kompositter**

(56) Fremdragne publikationer:
EP-A1- 1 724 098
EP-A2- 0 415 870
DE-A1- 3 027 655
DE-A1- 4 115 831
GB-A- 2 452 298
US-A- 5 344 687

The present invention relates to a method for manufacturing structure member preforms of fibres.

Fibre composite materials are frequently used in lightweight construction due to their material characteristics. There is a plurality of different methods of structure members of the fibre composite materials which differ from each other essentially through the semi-finished products (pre-manufactured raw material forms) processed in these methods. In the technical field of fibre composite materials, it is essentially differed between semi-finished products preimpregnated with resin, also named prepreg, derived from "preimpregnated", and dry semi-finished products. The starting material for both types of semi-finished products for fibre composite materials is a so-called roving. A roving is a thread/yarn consisting of a plurality of filaments, which could be named the real fibres, which are made of the fibre material. Carbon fibres, glass fibres, aramide fibres, etc. are preferably used for fibre composite materials. Such a roving can consist of some such as, for example, 8 or 10 filaments up to, for example, 50.000 or more filaments. In this application, the term "fibre" indicates a roving, except if it is referred explicitly to single filaments.

The so-called prepregs can be manufactured in different ways. For example, dry semi-finished fibre products can be impregnated with a thermoset resin which has a highly viscous, sticky consistency at room temperature. There are also semi-finished fibre products which are impregnated with a resin matrix of thermoplastic material. Both types are named prepregs in this application.

These semi-finished products may exist as mostly parallel unidirectional fibres, also named UD-prepreg, or as fabrics, also named fabric-prepregs.

There are also different types of dry semi-finished products in the prior art. An important type of dry prepregs are besides fabrics the layers, which usually exist as multi-axial-layers (MAG; abbreviation of German Multiaxialgelege) of plural superimposed layers of fibres with different orientations, which are kept together, for example, by sewing or by means of an adhesive called binder. Multi-axial layers can be manufactured unidirectionally (UD), biaxially, for example, in two layers, triaxially, for example, in three layers, quadriaxially, for example, in four

layers, and so on, that means with a corresponding number of layers having different orientations. Further dry semi-finished products are knit fabrics, braidings, interlaced fabrics, narrow band textiles and rovings. The rovings represent the starting material for all semi-finished products. The fibre composite material for fibre composite structure members always comprises the two components reinforcement fibre and matrix (resin). The two components reinforcement fibre and matrix (resin) need to be brought together in the manufacturing processes.

In case of the prepregs, that means in case of the semi-finished products with thermoset or thermoplastic coatings, impregnations, etc., the reinforcement fibre and the matrix are already present in a mixed/combined form. In case of the prepregs, the matrix is cured by applying temperature and/or pressure in an autoclave after the forming manufacturing steps leading to the desired geometry of the structure member.

In case of the so-called performing, a preform is manufactured in the desired geometry of the structure member using dry semi-finished products. The impregnation is performed thereafter, for example using a thermoset resin, by means of an injection method or an infusion method. In such a case, the resin is pressed with overpressure into the dry semi-finished product, or it is infiltrated into the semi-finished product having the geometry of the structure member using underpressure.

Accordingly, three usual manufacturing methods for the three-dimensional structure members of fibre composite materials can be differed in the prior art. At first, the preforming, in which a preform is built up of layers of fabric cuts and/or multi-axial layer cuts and thereafter impregnated in a mould with resin and cured. The second, the manufacturing of the structure member from prepreg cuts, which are deposited as layers in a mould and cured thereafter. The third, the fibre laying method, in which one or plural fibres are laid, for example automatically, on a profile. In this case, prepreg fibres can be used, as it is disclosed, for example, in US 5,645,677 (corresponds to EP 0 626 252 A). It is also known for fibre laying methods to use dry rovings. The continuous fixing of the fibres on the profile is performed either by using binders or the fibres are impregnated with resin in the

laying head immediately before being laid, as it is disclosed, for example, in US 2009/0229760 A1.

A method for manufacturing a FVW/FVK structure member of rovings using a forming tool and a forming tool for performing the method is known from WO 2009/124724 A1, wherein a roving is brought onto the form-surface of the forming tool by stretching the roving using a depositing device with tensioning between redirection devices in predefined orientations (FVW/FVK; abbreviation of German Faserverbundwerkstoff = fibre composite material/Faserverbundkunststoff = fibre composite plastic). A layer for manufacturing structure members consisting essentially of flat areas and a device for manufacturing the same are known from DE 30 03 666 A1, wherein a roving is deposited on an essentially plate-like surface and redirected via a yarn redirection element formed as a pin, bolt or the like. A method for manufacturing a preform for a structure element made of a composite material for an airplane is known from EP 1 584 462 A2, wherein a roving is deposited on a two-dimensional plane and fixed between start and end point by sewing and the three-dimensional shape of the structure member is obtained through a subsequent forming step. A device according to the preamble of claim 8 and a method for manufacturing of fibre-preforms for composite structure members are known from DE 10 2008 019 147 A1, wherein dry fibre-rovings are deposited on a geometric contour, wherein the dry fibre-rovings are provided with a binder such as a thermoplastic binder in a method step before depositing the same and are bound to the contour surface or the already deposited fibre-rovings by activating the binder. Thereafter, the fibre-rovings are cut using a cut unit. DE 100 05 202 A1 discloses the manufacturing of semi-finished reinforcement structure products for fibre composite materials, wherein the preforms are punched or cut out.

All these methods are not satisfactory with respect to the manufacturing of three-dimensional structure members of fibre composite materials. There are different disadvantages such as, for example, large proportions of cutting scrap of the original semi-finished products and/or high ratios of manual work and/or low production speeds for automatization and/or problems with the material storage and/or problems with the impregnation with the matrix.

A method for building-up a three-dimensional laminate preform for a structure member of fibre composite material by means of RTM is known from EP 0 415 870 A2, wherein a dry fabric preform comprises a plurality of fabric cuts, which are cut into the desired two-dimensional shapes and stapled on top of each other into a desired preform thickness. This dry fabric preform is shaped into the desired three-dimensional shape in a manner not described in detail, before it is brought between an upper cover layer and a lower cover layer provided with connections for the RTM infusion.

A method for continuous manufacturing of fibre composite materials is known from DE 41 15 831 A1, wherein a staple of reinforcement fibre parts and thermoplastic material are continuously supplied into a press in an evacuated foil tube.

Therefore, it is an object of the invention to provide an improved technology for manufacturing of three-dimensional preforms for structure members of fibre composite materials.

This object is achieved by a method according to claim 1.

Further developments of the invention are given in the dependent claims.

Further features and useful characteristics follow from the description of embodiments referring to the figures. The figures show:

Fig.1 a perspective view of a workpiece carrier and of a robot with a laying head according to the first embodiment of the invention;

Fig. 2 in (a) a view of a workpiece carrier, and in (b), (c) and (d) with laid fibre layers;

Fig. 3 in (a) a workpiece carrier with fibres laid thereon without intermediate-fixing and in (b), and (c) a workpiece carrier with fibres laid thereon with intermediate-fixing areas according to embodiments of the invention;

Fig. 4 embodiments of workpiece carriers with intermediate-fixing areas in cross-sectional views, in (a) with suction intermediate-fixing areas and in (b) with needle intermediate-fixing area;

Fig. 5 a partial, cross-sectional view of an embodiment of a workpiece carrier with an icing edge-fixing area;

Fig. 6 embodiments of edge-fixing areas of a workpiece carrier, in a) as edge-fixing area with mechanical clamps (kinematic system of the clamping device not shown) and in b) as hook edge-fixing area;

Fig. 7 embodiments of edge-fixing areas of a workpiece carrier, in a) as needle edge-fixing area and b) as hook edge-fixing area;

Fig. 8 cross-sectional views of laying, edge-fixing and cutting of fibres, in a) with an adhesive application integrated in the laying head and in b) with external adhesive application for the edge-fixing;

Fig. 9 embodiments of fibre cutting mechanisms;

Fig. 10 schematic views of different embodiments for realizing the relative movement of laying head and workpiece carrier;

Fig. 11 a schematic view for explaining the fibre supply;

Fig. 12 a first embodiment of a modified energy chain (drag chain) for the fibre guiding in a) in a cross-sectional view and in b) in a partially cut-open perspective view;

Fig. 13 a second embodiment of a modified energy chain (drag chain) for the fibre guiding, in a) in a cross-sectional view and in b) in a partially cut-open perspective view;

Fig. 14 schematic representations in cross-sectional views of an embodiment of a transfer device, which shows in a) to c) the taking off of the preform from a workpiece carrier by means of the transfer device;

Fig. 15 schematic representations in cross-sectional views of a second embodiment of a transfer device, which shows in a) to d) the taking off of the perform from the workpiece carrier by means of the transfer device;

Fig. 16 schematic representations in cross-sectional views of a third embodiment of a transfer device which shows in a) to d) the sequence of the taking off the preform from the workpiece carrier by means of the transfer device;

Fig. 17 a schematic representation of a vacuum stabilisation of a preform and the introduction of resin films according to an embodiment of the invention;

Fig. 18 a flow-chart of a method of manufacturing according to an embodiment of the invention; and

Fig. 19 a schematic representation of an embodiment of a technology for introducing gaps into rovings/fibres of a fibre share.

At first, some general explanations are given with respect to the taught devices and methods, before specific embodiments are described.

It is possible with the taught devices and methods, to lay dry fibres (rovings) in a fibre share (a group of fibres) onto a workpiece carrier. The dry fibres are fixed in an edge area of the workpiece carrier allotted to this purpose (edge-fixing) and, depending on the three-dimensional geometry of the preform to be produced, are eventually intermediately fixed in predetermined intermediate-fixing areas.

This results in that dry fibres, which are significantly cheaper, can be used for producing the three-dimensional preform on the one hand and high supply speeds can be achieved on the other hand, because of laying of dry fibres.

Different devices are taught in the method for edge-fixing and for intermediate-fixing, which can be selected depending on the three-dimensional shape of the preform to be produced.

In order to enable to use the advantages of laying dry fibres in an advantageous way, plural additional teachings for supplying, conveying, cutting of fibres are given, which develop their combinatorial effects in connection with the laying of dry fibres and/or the edge-fixing and/or the partial intermediate-fixing. It is possible in this respect, to reduce the tension on the dry laid fibres during the process of laying with a comparatively low mechanical or control effort, for example. It is explicitly emphasized, that the single disclosed components, units, method steps are taught in combination as well as independent of each other, and that this teaching is made for the purpose of disclosing the same as well as for the purpose of disclosing inventions which can be claimed independent of each other. That means, for example, that the disclosure relating to the wearless cutting of fibres can be claimed in combination as well as separately and/or independently of the other teachings such as the fibre guiding via modified energy chains or the dry-laying of fibres.

Fig. 1 shows a robot 10, to which laying head 20 is attached. A workpiece carrier 40 is held in a support 15 for the workpiece carrier. It is shown schematically in Fig. 1, that the laying head 20 is adapted to lay a fibre share 30 onto the workpiece carrier 40. In Fig. 1, merely four fibres of the fibre share 30 are shown, which are simultaneously laid. The fibre share 30 can comprise a plurality n of fibres, where n = 2, 3…., where n = 8 or n = 16 or n = 32 are presently preferred.

The arrangement serves the purpose of producing a three-dimensional preform for a structure member of fibre composite material with a multi-axial fibre architecture with plural layers (MAFA) similar to a multi-axial layer (MAG).

As shown in Fig. 2a), the workpiece carrier 40 comprises a workpiece forming area 41 and an edge-fixing area for this purpose. The workpiece forming area 41 corresponds to the desired three-dimensional shape of the preform. The edge-fixing area 42 serves for fixing the dry-laid fibres 33 in the edge area of the workpiece carrier 40, as explained in further detail below.

In Fig. 2b), the workpiece carrier is shown with a first fibre layer 31a, which has been laid (deposited) onto the workpiece carrier 40 in a first orientation (= axial alignment). As indicated in Fig. 2b), the fibre layer 31a consists of fibres (rovings) 33, which have been laid in this axial direction. In Fig. 2c), the same workpiece carrier 40 is shown, onto which a second fibre layer 32b has been laid onto the first fibre layer 31a. The fibres of the second fibre layer 31b have an orientation of -45° relative to the orientation of the first fibre layer 31a. It is shown in Fig. 2d), how a third fibre layer 31c has been laid over the second fibre layer 31b, whereby this has been laid only over a part of the workpiece carrier 40. The third layer 31c has an orientation of +45° relative to the first layer 31a and thus of 90° relative to the second layer 31b. The three layers 31a to 31c form a multi-axial fibre architecture having plural layers (MAFA) 31.

As it has already been explained, the fibres 33 are laid dry onto the workpiece carrier 40. With the workpiece carrier shown in Fig. 2, it follows that this could lead to difficulties at the protruding curved portion. Something similar could happen in a situation shown in Fig. 3a). There, a workpiece carrier 40 is shown, whose shape essentially corresponds to a circular cylinder centrally cut in the axial direction. In case of laying dry fibres, which are merely fixed in the edge area of the workpiece carrier 40, a sliding of the fibres could occur, as it is shown in Fig. 3a).

For this reason, an intermediate-fixing of the dry laid fibres is made at such critical locations. An example for such an intermediate-fixing is schematically shown in Fig. 3b). In Fig. 3c), a plan view of a workpiece carrier is shown, which is shaped like the workpiece carrier shown in 3a), which, however, comprises a protrusion protruding at its upper side, around which the fibres 33 are to be laid. As it immediately follows from Fig. 3c), an intermediate-fixing of the dry laid fibres should be made in this area.

First embodiments for providing such intermediate-fixing areas are shown in Fig. 4. In Fig. 4, a cross-sectional view of a workpiece carrier 40 is schematically shown, which comprises a hollow inner space 40h. The hollow inner space 40h can be connected to a pump via a pump connector 40p. Through holes 401 are formed in the wall 40w on which the fibres 33 are to be laid. The inner space 40h is held at a pressure pi which is lower than the ambient pressure pu by connecting a corresponding pump. As a result, an underpressure and a suction effect, respectively, are generated at the outer side of the wall 40w such that the laid fibres 33 are intermediately fixed in this edge-fixing area, which has been formed as an underpressure/suction area 43c. Another embodiment of an intermediate-fixing area 43 is shown in Fig. 4b), which is formed as a needle area 43d). In this needle area, needles 43n protrude at the outer side of the wall 40w, by means of which the fibres are intermediately fixed.

Other designs of intermediate-fixing areas, for example as areas for applying adhesive or for providing hooks or for freezing the fibres, are also possible.

Corresponding fixing possibilities are also provided for the edge-fixing area 42. In Fig. 5, a partial cross-sectional view of a wall 40w of a workpiece carrier 40 is shown. Consecutive to the workpiece forming area 41, an edge-fixing area 42 is formed. This one is held at a temperature, which is significantly lower than the freezing point of a fixing medium (for example water). Significantly lower means a temperature difference of 10K or more, in case of water approximately 30K. The cooling of the fixing area can be achieved, for example, by flowing a cold, liquid cooling medium through cooling channels in the fixing area. In this respect, the usual cooling means used in cooling arrangements can be used.

By means of a spray nozzle 48, the liquid fixing medium having a low viscosity is sprayed to the location, where the fibres 33 are to be fixed in the edge-fixing area 42. Due to the large temperature difference, the fixing medium immediately freezes and thereby the fibre 33 to be fixed is immediately frozen onto the freezing area 43b. This fixing method is, of course, as it has already been described, also applicable for the intermediate-fixing. Fixing media, which do not

have a low viscosity at room temperature, need to be supplied to the spraying nozzle in a hot state.

In Fig. 6a), an edge-fixing of fibres 33 by means of mechanical clamping is shown. Holding elements 42h are provided in the edge-fixing area 42 for this purpose, which produce a clamping force perpendicular to the edge-fixing area and thus clamp the fibres 33. The clamping force can be generated by a kinematic system driven pneumatically or electrically or hydraulically, or, for example, also by means of magnetic clamping elements, which are attracted to the edge-fixing area 42.

In case of using magnetic clamp elements, these are removed by a manipulator provided at either the laying head or at the workpiece carrier or by another manipulator (e.g., a robot) before the deposition of the fibre share, and they are again attached after the fibre share has been placed in the clamping area. Alternatively, for example, controllable electromagnets, could be provided in the edge area.

In the mechanical clamping system shown in Fig. 6a), two rows of holding elements 42h extending in a distance and essentially parallel to each other along the edge-fixing area 42, are used.

An alternative embodiment of a mechanical clamping system for the edge-fixing area is shown in Fig. 6b). There, two rows of clamping hooks 42k are used. The clamping hooks could, which is not shown, be moved upwards out of the plane of the edge-fixing area and turned at this time, such that the fibres 33 could be laid in a dry state and could be clamped thereafter by turning and pulling down the hooks 32k. The clamped state is shown in Fig. 6d).

In Fig. 7a), an embodiment of the edge-fixing area 42 is shown, in which needles 42n protrude from the edge-fixing area 42. In Fig. 7b), again, an embodiment is shown, in which hooks 42k are used for the edge-fixing.

In Fig. 6, the use of the edge-fixing area such that the fibres 33 are cut after the edge-fixing is shown. In Fig. 7, on the other hand, the use of the embodiments of

the edge-fixing areas such that the fibres are not cut after the edge-fixing but that the fibre share laying pattern is continued without cutting the fibres at this location is shown.

It is schematically shown in Fig. 8, how an edge-fixing by means of adhesive KS is obtained in the edge-fixing area 42 using the workpiece carrier 40 and the laying head 20. In Fig. 8a), the process flow is shown from the top to the bottom with a laying head 20 with integrated adhesive nozzle 22. The fibre share 30 supplied from the right top side into the laying head 20 is laid onto the workpiece carrier 40 via a pressing/directing roller 22. Thereby, the dry fibres 33 of the fibre share 33 are first laid onto the workpiece form area 41. The laying head 20 comprises an integrated cutting mechanism 21, by means of which the fibres 33 of the fibre share 30 can be cut. Details of such cutting mechanisms are explained further below.

In the second view in Fig. 8a), a position is schematically shown, in which the lengths of the fibre from the actual point of deposition on the workpiece carrier 40 to the cutting mechanism corresponds to the remaining deposition length to the end of the edge-fixing area 42. In this position, the fibres 33 of the fibre share 30 are cut by operating the cutting mechanism 21, as schematically indicated by the arrow. Adhesive KS is applied to the corresponding end of the fibre by the integrated adhesive nozzle 22 in corresponding lengths such that, after a further movement of the laying head 20 into the position, which is shown in Fig. 8a) below, the cut-off fibres 33 of the fibre share 30 are fixed in the edge-fixing area 42 by the adhesive KS applied only to portions of the fibres.

In Fig. 8b), essentially the same process flow is shown for an embodiment, in which the adhesive nozzle is provided as an external adhesive nozzle 49 instead of the internal adhesive nozzle 22. Thereby, the adhesive is not applied to the fibres 33 of the fibre share 30 but onto the corresponding portion of the edge-fixing area 42.

In Fig. 9, a first embodiment of cutting mechanism 21 for the laying head 20 is shown in a). The cutting mechanism 21 comprises a pusher 210 and a counter bearing 220. In a passing position, the pusher 210 and the counter bearing 220

have a distance from each other. In this position, a fibre channel or a fibre passage 250 is formed between the pusher 210 and the counter bearing 220. The fibres 33 can be conveyed in a fibre supply direction V through this fibre passage 250 during the laying process (see Fig. 8). The pusher 210 is moveable in a direction perpendicular to the fibre supply direction and relative to the counter bearing 220, as follows from a comparison of the views a1) and a2). At the sides limiting the fibre passage 250, the pusher 210 and the counter bearing 220 comprise clamping jaws 211, 221. A cutting blade 230 is provided in the pusher 210 such that it is moveable in a direction perpendicular to the fibre supply direction V. The cutting blade 230 is biased by a spring 233 in a direction away from the fibres 33. For cutting a fibre 33, the pusher 210 is moved towards the counter bearing 220 by means of an actuator (not shown) and pushed against the counter bearing with a clamping force F_K and the fibre to be cut is clamped between the clamping jaws 211, 221 with this clamping force. This state is shown in view a2). Then, the cutting blade 230 is pushed against the biasing force of spring 233 by means of an actuator against the fibre to be cut with a cutting force Fs and the fibre clamped between the clamping jaws 211. 221 is cut or broken, respectively. In the embodiment shown, the cutting blade 230 comprises cutting edge flanks 231, 233, which have an angle of approximately 90° relative to each other. That means, the cutting edge angle amounts to 90° (the preferred value from a range of 45° to 120°).

The cutting operation with fibre 30 and such a "blunt" cutting edge is called stretch-breaking. Thereby, the fibre is bent over an edge, that means the cutting edge, under high tension. The combination of tension stress and bending stress and the brittleness of the material of the fibre lead to a breaking of the fibre. This cutting method is only suitable for brittle fibres such as carbon fibres or glass fibres. The advantage of the large cutting edge angle results in that the cutting edge/breaking edge is very robust due to the same and that the wearing is very low. A relative movement between cutting edge and fibre is not required. A counterface for cutting which could harm the breaking edge is not required.

The actual process of stretch-breaking is shown in view a4) in an enlarged view, as indicated by the hatched frame in view a3).

It is obvious that the clamping of the fibre between the clamping jaws 211, 221 allows stretch-breaking as well as prevents transmission of tension stress to the fibres 33 of a fibre share.

The principle of the cutting mechanism 21 for stretch-breaking schematically shown in Fig. 9a) can be implemented in different embodiments. There have been already described separate drives for the pusher 210 and the cutting edge 230, which can be mechanical or hydraulical or pneumatical drives or combinations of pneumatical, mechanical or hydraulical drives for the two elements. Alternatively, the pusher 210 could be stationary and the counter bearing 220 could be moved towards the pusher 210. Alternatively, it is also possible to only accelerate the pusher 210 or the cutting edge 230 for movement and to support the other element in a spring-biased manner at the same. For example, the pusher 210 can be accelerated pneumatically, and the cutting edge 230 is supported in a spring-biased manner in the pusher 210. With a corresponding adjustment of the mass of the cutting edge 230 and the spring force of the spring 233, the cutting edge is accelerated against the spring force of spring 233 due to its inertia when the pusher 210 hits the counter bearing 220. Using this principle, it is also possible to move the cutting edge 230 and to provide a correspondingly strong spring 233, which leads to a slaving of the pusher 210. In this case, when the pusher 210 has come into contact with the counter bearing 220, the cutting edge 230 is moved further against the force of spring 233 for stretch-breaking.

Another embodiment of the cutting mechanism 21 is shown in Fig. 9b), in which the principle of bend-breaking is implemented. Thereby, the fibre is pushed against an elastic base 222, which is attached on the counter bearing 220 with a sharper cutting edge, that means a significantly smaller cutting angle as in case of the stretch-breaking. Thereby, the base is formed around the cutting edge under the impression of the cutting edge. The fibre present between the cutting edge and the base is bent around the small cutting radius of the cutting edge. Due to the brittleness of the fibres, these already break with small pressing forces of cutting edge to base. The cutting edge and the base do not wear, or only to a low degree, when the cutting force is limited to an amount which is just sufficient, because also in this case no relative movement between cutting edge, base and fibres to be cut occurs, through which an abrasive wearing could be generated.

The cutting edge 240 can again be moved pneumatically, hydraulically, mechanically etc.

Fig. 10 shows different possibilities of generating the relative movement of laying head 20 and workpiece carrier 40. In the embodiment shown in Fig. 10a), the workpiece carrier 40 is held on a stationary support 15 for the workpiece carrier. The robot 10 moves the laying head 20 during the laying of the fibre share.

Vice versa, a manipulator 16 for the workpiece carrier 40 could be provided (Fig. 10b)), which moves the workpiece carrier relative to the laying head 20, which is supported at a laying head support 11. Of course, also a combination of robot 10 and manipulator 16 is possible, as is shown in Fig. 10c).

In Fig. 11, it is schematically shown how the fibres 33 for the fibre share 30 are supplied during the laying process. The fibres (rovings) 33 are wound on bobbins 51 of a fibre supplying mechanism 50 and they are supplied from there via parts of a fibre supplying mechanism 50, which are to be described in more detail, to the laying head 20. During the relative movement R of the laying head 20 and the workpiece carrier 40, different supplying speeds and tension forces can occur within the fibres 30. Due to the arrangement of the redirecting positions of the fibre-supplying mechanism at the joints of the manipulator system, it is possible to keep the distance of the fibre share from the bobbin to the laying head constant. By these means, a loosening and a related sagging of the fibre share during movements of the manipulator system is avoided.

Fig. 12 shows a first embodiment of a fibre guiding mechanism 52 of a fibre supply mechanism 50. The fibre guiding mechanism 52 is implemented in form of a modified energy chain (drag chain), which represents a form of fibre guiding chain. Energy chains (drag chains) are known in mechanical engineering to guide flexible cables or pneumatic or hydraulic lines, which are connected to a moving machine part.

For the fibre-guidance of the fibre share, a fibre guiding chain which consists of plural segments which are pivotable relative to each other, is used which can be manufactured, for example, by modification of an energy chain. The energy chain

is modified in a manner, that rotatably supported shafts guide the fibres, as it is shown in Fig. 12.

Such a fibre guiding chain 52 comprises chain segments 52s. Adjacent chain segments 52s can move relative to each other rotating around an axis 52a. That means, that the distance of two adjacent axes 52a is kept constant. In the modified energy chain, rotatably supported shafts 52w are put on each axis 52a. That means, the rotatably supported shafts 52w extend along the axial direction of the axes 52a. In a side view, as it is shown in Fig. 12a), the fibres 33 pass the shafts 52w in the fibre supply direction V, alternating left and right of the shafts 52w. That means, in a plan view onto the fibre share 33 that the fibre share 33 is guided in the fibre supply direction V, alternating below and above the shafts 52w.

As a result, the distance of adjacent shafts 52w is constant in case of bending the fibre guiding chain 52 such that essentially no tension force is applied to the guided fibres 33 and the fibre share 30, respectively, due to a movement of the fibre guiding chain. Due to the guiding via rotatably supported shafts, the friction forces occurring in case of, for example, guidance through hoses/pipes do not apply. As a result, a lower force for drawing the roving share is necessary and the fibres are guided without damage.

By using fibre guiding chains, which also allow a torsion around the longitudinal axis of the chain, the fibres can be three-dimensionally guided in the space. Besides the guiding of single or of a plurality of fibres, this embodiment of fibre guiding chains also allows the guiding of band-like textile reinforcements such as small band textiles and web bands.

Fig. 13 shows a second embodiment of a fibre guiding chain. The second embodiment differs from the first embodiment in that separately rotatably supported rollers 53r for the fibres (rovings) 33 are provided on the shafts 52w. Due to this arrangement, it is possible to convey each fibre with individual speed through the fibre guiding chain.

The laying head 20 comprises a not shown fibre conveying device. The fibre conveying can be implemented, for example, with a conveying unit as described in US 2009/0229760 A1.

Basically, a fibre conveying according to the Eytelwein principle is known. In sewing and embroidery machines for fibre-composite materials, this Eytelwein principle has been used for a long time. The fibre conveying mechanism serves to compensate the fibre forces generated due to friction in the fibre guidance and the fibre supply, respectively. In such a conveying mechanism according to the Eytelwein principle, the fibres run over two rows of rollers, which are arranged parallel to each other and offset. As long as the rovings are essentially free of tensions, the rollers rotate under the rovings without conveying the same, that means with slippage. When tension forces are applied to the rovings, which are generated, for example, at the redirection rollers and the like, the fibres are conveyed by the rotating rollers.

A device for the treatment of the fibres (rovings) can be provided optionally in the laying head. In this fibre treatment device (not shown), the fibres can be brought to a defined width by spreading/widening (treatment). Furthermore, all fibres can be brought together to a unitary homogenous band of defined width (homogenization). The goal is, in this case, that no gaps between the fibres of a fibre share and also no overlaps between the fibres of the fibre share occur. Of course, it is also possible to intentionally generate gaps or overlaps in case of the opposite goal. By means of the fibre treatment device, the width of the fibre share at the outlet of the laying head can be varied and a variation of the mass per unit area (grammage) becomes possible.

The fibre treatment can be made by rollers, rolls, pins and the like. That means, a fibre treatment device is provided, which can bring the fibres of the fibre share to a defined width and/or can vary the distances of the fibres of the fibre share.

In Fig. 14, the process of the transfer of a built-up preform from the workpiece carrier to the subsequent process step is schematically shown. The workpiece carrier 40 is, in the shown embodiment, formed with a hollow inner space 40h, and the inner space 40h can be connected to a pump or a pressure source via a

connector 40p. The preform 31 in form of a MAFA has been built up by laying plural fibre shares according to a fibre laying pattern.

In the embodiment shown in Fig. 14, there are, for example, intermediate-fixing areas 43, which operate using underpressure p2.

The transfer device 60, the shape of which at the lower side corresponds to the outer shape of the preform 31, is lowered in direction of the arrow A onto the workpiece carrier 40. In the lowered state, which is shown in Fig. 14b), a pressure p1 is applied to the connector 40p of the workpiece carrier 40, which is equal to or larger than the ambient pressure pu, while an underpressure p2, which is lower than the ambient pressure pu, is applied to a pressure connector 60p of the transfer unit 60. Thereby, the preform 31 is sucked to the transfer device 60, while the suction effect at the workpiece carrier 40, which served for the intermediate-fixing and/or the edge-fixing, has been relieved. The preform can then be lifted off the workpiece carrier under maintenance of the underpressure p2, as it is shown in Fig. 14c) (movement of the transfer device 60 in the direction of arrow B).

As can be seen in Fig. 14, the transfer device 60 takes the readily laid preform 31 from the workpiece carrier 40 and transfers the same, for example, into a mould for injection of resin and for curing. Alternatively, the preform can also be brought to an intermediate storage or to another processing station.

The "gripping" of the readily laid preform 31 can not only be made using underpressure but also mechanically, for example, by clamping, needles, electrostatic or magnetic holders etc. or by freezing or adhering as it has been described before.

The transfer device also gives the possibility for draping the preform as it is described hereinafter. The transfer device also gives the possibility to pack the readily laid preform between two layers of resin films or foils and/or to do a form fixing.

In Figs. 15 and 16, possibilities for reshaping (draping) the readily laid preform 31 by means of the transform device 60 are shown. In Fig. 15, an embodiment is shown by means of which the edge region of the preform 31 can be draped. For this purpose, the workpiece carrier 40 comprises edge-draping areas 45 which are moveable in direction of the arrows C (see Fig. 15b)). As can be seen from the sequence of Fig. 15a) to c), the transfer device is lowered onto the workpiece carrier 40 with the readily laid preform 31, then, the draping end areas 45 for draping the edge of the readily laid preform 31 are moved and then the preform 31 draped in the edge region is taken off the workpiece carrier by means of the transfer device 60.

In Fig. 16, an embodiment for draping another region is shown. An insert 61 is inserted into a recess 47 in the workpiece carrier 40. The preform 31 is readily laid onto the workpiece carrier 40 (Fig. 16a)), before the transfer unit 16 is lowered onto the workpiece carrier 40. Before the lowering of the transfer device 60, the insert 46 is removed, such that the recess 47 below the readily laid preform 31 is present. The transfer device 60 comprises a draping protrusion 62 complementary to the recess 47.

As can easily be seen in Fig. 16c), the corresponding region of the readily laid preform 31 is reshaped (draped) by the cooperation of the draping protrusion 62 and the recess 47 and then lifted off the workpiece carrier 40 in the draped form (see Fig. 16d)).

That means, cooperating draping means 45, 46, 47, 62 are provided for draping the readily laid preform 31 at the transfer device 60 and the workpiece carrier 40.

Fig. 17 shows how a packing or a form fixing of the preform 31 is possible using foils 70 or resin films 71. For this purpose, for example, a foil 70 or a resin film 71 is deposited on the workpiece carrier before the fibre layers 30/33 are laid. Optionally, resin films 71 can also be deposited between some resin layers. After the laying/deposition of the last fibre layer, a foil 70 or a resin layer 71 is deposited on top. The outer foils 70 or the outer resin films 71 are connected to each other in an air-tight manner and then the air between the films is evacuated via an outlet 72.

An advantage with the packing between two resin layers 71 and, eventually, the provision of resin layers 71 between some fibre layers, results in that the resin is already present as the resin films within the structure member preform and that the injection step can be omitted, although dry fibres have been laid and the fibres have not been provided with resin or adhesive during the laying.

Thereby, the foils and the resin layers can be premanufactured, sheet-like, two- or three-dimensionally shaped, thermoplastic or thermoset resin layers or thermoplastic and/or thermoset foils. They can also be created by means of pulling a sheet-like resin layer or foil over the fibre layers similar to a deep-drawing process or, for example, by spraying of resin or of a suitable polymer onto the fibre layers. As an alternative to the introduction of resin layers, hybrid fibres can be used, which comprise, besides the reinforcement fibres, thermoplastic and/or thermoset fibres. The outermost foil or the outermost foils can also be functional foils which, for example, serve for realizing high surface qualities equivalent to varnish. In another embodiment of the aspect, a preform can also be placed without resin films inside a pre-manufactured foil bag and/or tube foil portion, the open ends of which are subsequently closed.

Furthermore, this "packing" is advantageous because the shape of the preform can be stabilized by application of underpressure for an intermediate storage or for transporting the same. Fibres, resin films and foils form a unit which is stable during transport and is good for storing, which allows curing in a simple hot pressing device. Due to the shorter flow paths of the resin, the impregnation of the preform is shortened and, thus, also the time of occupying a tool. Furthermore, the fibre warping due to flowing processes during filling the form cavity occurring in resin injection processes is avoided. A further advantage results in the simple handling of dry preforms of fibre layers and/or semi-finished product layers packed in this way because the same can be, for example, automatically handled with simple underpressure manipulators.

Furthermore, this "packing" of the preform facilitates a subsequent reshaping, because the draping capability of the preform can be selectively influenced, for

example, by the strength of the enclosed vacuum and/or the fixing of edges or of edge portions of the packing.

The "packing" or the form fixing respectively, is equally advantageous for sheet-like preforms, whether they are two-dimensional sheet-like or three-dimensional sheet-like, because a form stable (= form fixed) transfer or storage is enabled. The term sheet-like means similar to a sheet or like a sheet in the sense that structure members essentially forming a surface are meant, whose extension perpendicular to its surface is small in comparison to its extension along its surface, that means, for example, at least 1:4 or 1:5 or 1:6 or 1:7 or 1:8 or 1:9 or 1:10 or …….. or 1:100 or 1:101 or ……... 1:200 or ……. etc. In case of combination with resin layers, specific advantages result due to an additional reduction of the impregnating time. The outer layers (foils and resin films, respectively) are advantageously formed in an air-tight manner for this purpose such that the application of the underpressure, that means the evacuation of the intermediate space is possible.

For this purpose, the preform to be packed does not need to be manufactured by means of the described device, as it has already been described with respect to the packing or the form fixing of the preform 31 by means of the foils 70 or resin films 71, referring to Fig. 17. The use of multi-axial-layers, fabric etc. for forming the preform, which is going to be packed and form fixed, resp., as described above with respect to Fig. 17, is equally possible.

After the device and the components of the device and the components of the device for manufacturing fibre layers and structure member preforms of fibres have been described, a method for manufacturing of such fibre layers and structure member preforms is described in the following.

As shown in Fig. 18, at first the apparatus is equipped with the workpiece carriers and the fibres (step S1). In step S1a, a resin layer or a foil can be deposited/laid on the workpiece carrier, as it has been described examplarily referring to Fig. 17. This step S1a is optional.

Then, in step S2, the fibres of the fibre share are fixed at the beginning of a laying path. Usually, this will be done in the edge-fixing area of the workpiece carrier. The edge area can, in this respect, also designate a fixing area at the inner edge of a structure member or of a workpiece carrier, resp., if the structure member comprises a larger section not to be covered with fibres, such as, for example, a window or a manhole. The laying path to be followed in step S3 is predefined in a fibre laying pattern. In the optional step S3a, the fibres are intermediately fixed. At the end of the laying path, the fibres of the fibre share are fixed in the edge-fixing area (S4).

The fibres of the fibre share are cut optionally behind the edge-fixing step (S4a). Such a process has been exemplarily shown in Fig. 8.

It is checked in step S5, whether the layer corresponding to the laying pattern is complete or not. If the layer has not yet been completely laid, a jump is made to step S2, in which the fibre share is fixed at the beginning of the laying path now to be followed for the layer. In case the laying path has to be continued at the same position (see, for example, Fig. 7, this fixing has already been performed by performing the previous step S4).

In case the evaluation in step S5 results in that the layer has been completely laid, it is checked in step S6 whether the preform has been completely laid or not. If not, a resin layer is optionally deposited/laid onto the laid layer in step 6a (see, for example, Fig. 17) and in step S6b, local reinforcements are optionally deposited, and then the process continues with step S2. The steps S2 to S6b are repeated in the described manner until the preform has been completely laid. In such a case, the evaluation in step S6 results in YES, such that the process continues to step S7. In step S7 it is evaluated whether resin layers or foils have been underlaid beforehand. The laying/depositing of one or more local inserts (e.g. cuts of fabric or layers, preformed embroideries, bands) onto the preform or inbetween the layers of the preform in step S6b, is made for formation of local reinforcements.

If the evaluation in step S7 results in NO, then the portions of the fibres in the edge-fixing area are separated from the preform, for example, by cutting (step

S8). Thereby, the preform obtains its desired form. The cutting of the fixing area is optional. It may also be advantageous to maintain the fixing area at the preform (better preform stability). The fixing area can, for example, serve as a pinching edge in a resin injection tool.

Thereafter, the preform is taken off the workpiece carrier in step S9. This can be performed, for example, as it is shown in Figs. 14 to 16. After the taking off in step S9, the taken-off preform is transferred to a curing mould or to an intermediate storage or to another processing step (S14). Between steps S6 and S8, optional draping steps can be provided.

If it is determined in step S7, that a resin layer or a foil has been underlaid, the method continues to step S10. In step S10, a resin film or a foil are deposited on the preform, which is present on the workpiece carrier. Then, the upper and lower resin film/foils are sealed against each other in step S11 and an underpressure for stabilizing the preform is applied in step S12. Then, in step S13, the stabilized preform is taken off the workpiece carrier and the method preceeds to the already described step S14.

The described devices and methods can provide, besides others, the following significant advantages:

A) Adhesive application

The adhesive application is optional in general, that means that also other fixings of the fibre share at the edge or for intermediate-fixing are possible.

Previously known resin and/or application systems mainly serve to impregnate the fibres with resin, in order to avoid the otherwise necessary and subsequent resin injection. With the invention, in particular adhesives with a high viscosity can be used, which allow a fixing of the fibre share in the range of a second.

When an adhesive is used for fixing the fibre share, the same is used preferably only in the fixing area at the beginning and at the end of a

laying path. This results in that no further matters potentially relevant for regulatory admission are introduced into the preform, and that the impregnation with resin is not hindered by the adhesive.

The device and the method allow an adhesive application onto the workpiece carrier as well as onto fibres already lying on the workpiece carrier as well as an application onto fibres which are still in the laying head and yet to be deposited.

When fixing the fibre share by means of adhesive, an adhesive bead KS is applied to the fibre share 30 to be laid at the beginning and at the end of a laying path. Low viscosity adhesives completely impregnate the fibre (roving), which consists of a plurality of filaments such that all filaments are securely fixed. Higher viscosity adhesives (viscosity ≥ 1500mPas), however, do not completely impregnate the fibre but essentially adhere to the side of the fibre, onto which the adhesive bead KS has been applied. Due to the filaments not fixed with the adhesive, a separating layer is formed. In this case it can happen that, when fixing another fibre share onto a share already laid and during occurence of the tension force along the fibre share occurring during the laying of the share, the fixation rips open at the separating layer. The lower fibre share is divided, so to speak. In order to solve this problem, gaps 301 are introduced into the fibre share in the area of the fixation. Thereby, the higher viscosity adhesive can better impregnate the fibres and a separating layer is avoided.

This process is shown in Fig. 19. Fig. 19a) shows the undisturbed fibre share. A plurality of bodies are pushed through the share as shown in Fig. 19b). These bodies can be, e.g., needles 42z of a needle bar. When the fibre share is pulled a little bit in the laying direction (see the arrows in Fig. 19c)), the gaps (301 in 19c)) are created through which also the higher viscosity adhesive of the adhesive bead KS (Fig. 19d)) reaches the back side of the fibre share and thus prevents potential separating points. The arrangement of the bodies 42z, which create the gaps 301 in the share, can be freely selected. A uniform distribution over the width of the roving share is advantageous.

B) Use of different fibre types

In particular due to the fact that the fibres are laid in a dry state, the use of different fibre types in one process step is possible, that means, for example, mixed in one layer or the like. For example, glass fibres and carbon fibres could be mixed with one head and be subsequently laid/deposited. In case they should be laid/deposited subsequently, two fibre shares, for example, a glass fibre share and a carbon fibre share, could be transported separately in two supply devices 52 to the laying head which then eventually comprises two conveying mechanisms.

C) Variation of the laying width of the fibre share

It is (made) possible to vary the width of the laid fibre share, wherein the width of the single fibres (rovings) of the share can be set, for example, by spreading or constricting, waisting, narrowing. This happens in the laying head, and it is done, e.g., by varying the redirection radii or the degree of redirection.

By varying the laying widths, the mass per unit area (grammage) of the fibre share can be set.

D) Possibility for combination with other preforms

Due to the use of dry fibres for manufacturing the preform, there is the possibility to supplement the preform manufactured with the described method with other preforms to a more complex structure, wherein the other preforms may be manufactured with other preforming methods, such as braiding, embroidery or fibre moulding. Furthermore, there is the possibility to reinforce a preform manufactured with the method described herein, for example, by sewing.

It is explicitly stated that all features disclosed in the description and/or the claims are intended to be disclosed separately and independently from each other for the

purpose of original disclosure as well as for the purpose of restricting the claimed invention independent of the composition of the features in the embodiments and/or the claims. It is explicitly stated that all value ranges or indications of groups of entities disclose every possible intermediate value or intermediate entity for the purpose of original disclosure as well as for the purpose of restricting the claimed invention, in particular as limits of value ranges.

Patentkrav

1. Fremgangsmåde til opbygning af en tredimensionel flad præform til en strukturdel af et fiberkompositmateriale, omfattende følgende trin:

danne en præform ved at lægge (S3) et fibersæt (30) af tørre fibre på en tredimensionel arbejdsstykkebærer (40) til dannelse af fiberlag til den tredimensionelle præform, og

lufttæt pakning af præformen mellem et første lag (70, 71) ved en side af den flade præform og et andet lag (70, 71) ved en anden side af den flade præform modstående den første side og tømme mellemrummet mellem lagene, hvor fiberlagene form-fikseres ved pakningen,

hvor, under dannelsen af præformen, ét eller flere tredje lag (70, 71) lægges mellem ét eller flere af fiberlagene (30, 33), og

hvor det første lag (70, 71) og det andet lag (70, 71) og det/de tredje lag er termoplastiske og/eller termohærdende resinfilm eller termoplastiske og/eller termohærdende folier.

2. Fremgangsmåde ifølge krav 1, hvor folierne og/eller resinfilmene er præformet flade, todimensionel eller tredimensionel dannet termoplastiske og/eller termohærdende resinfilm eller termoplastiske og/eller termohærdende folier eller dannet henholdsvis ved hjælp af overtrækning af en plan resinfilm eller folie, over fiberlagene magen til en dybtrækningsproces eller ved påsprøjtning af resin eller af en egnet polymer på fiberlagene.

3. Fremgangsmåde ifølge krav 1 eller 2, hvor det første lag og/eller det andet lag er dannet af en funktionel folie med en overfladekvalitet svarende til en lak/fernis.

4. Fremgangsmåde ifølge et hvilket som helst af kravene 1 til 3, hvor hybridfibre, der omfatter termoplastiske og/eller termohærdende polymerfibre foruden forstærkningsfibrene, anvendt som fibre (33) i stedet for én eller flere af de tredje lag.

5. Fremgangsmåde ifølge et hvilket som helst af kravene 1 til 4, hvor præformen hærdes i en varm-presseindretning efter pakningen.

DRAWINGS

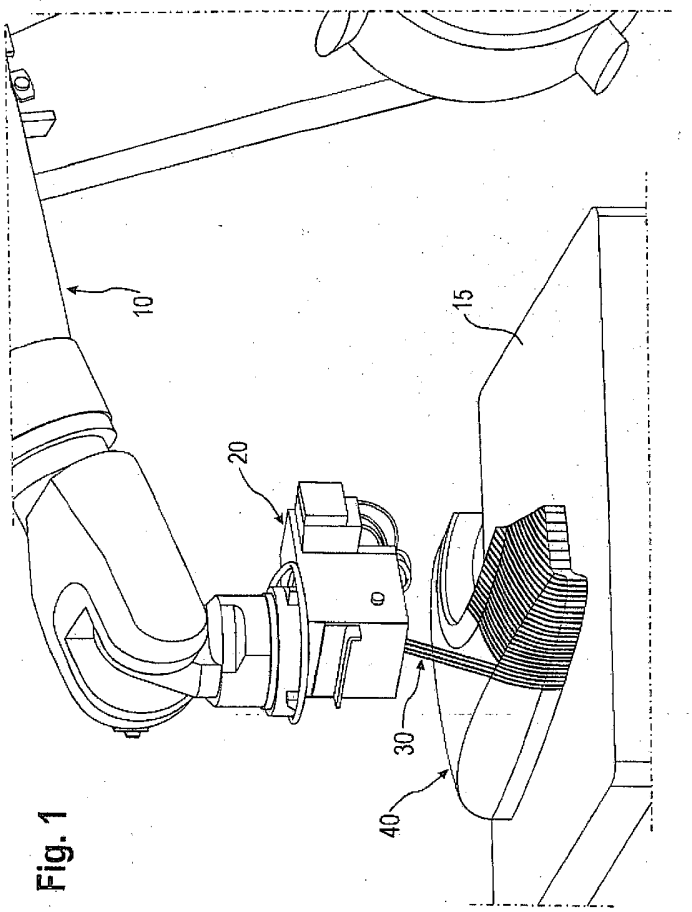

Fig. 1

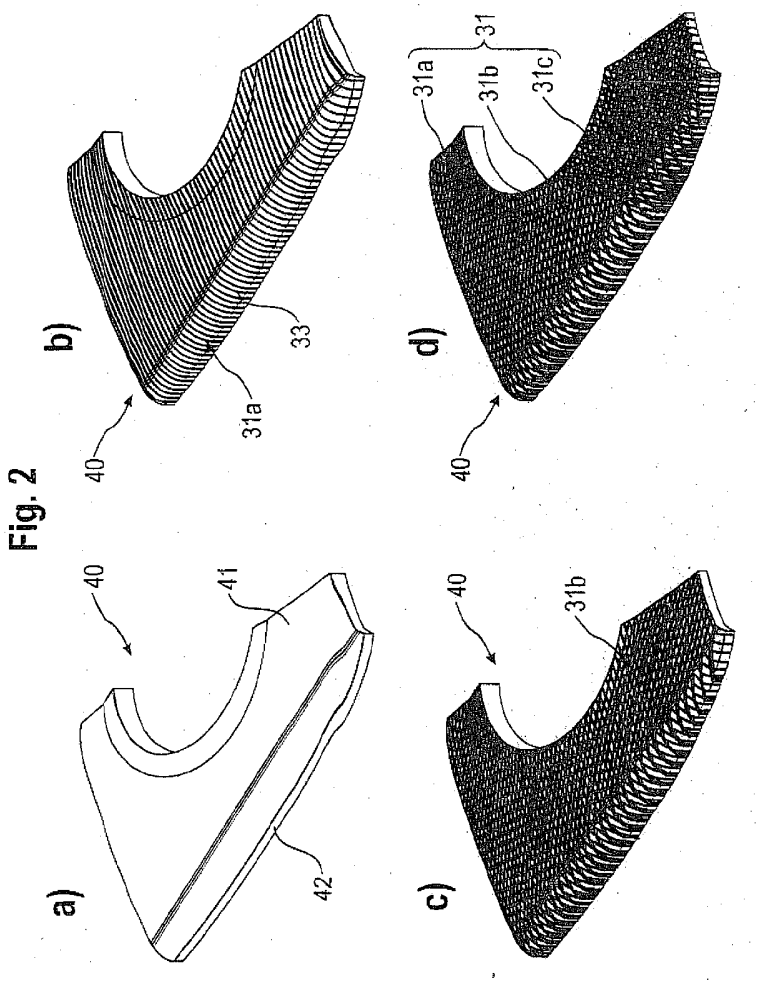

Fig. 2

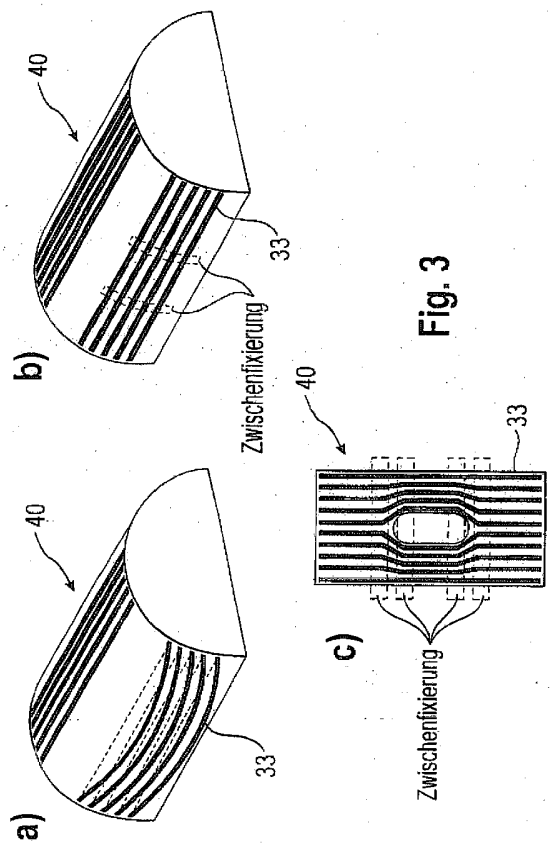

Fig. 3

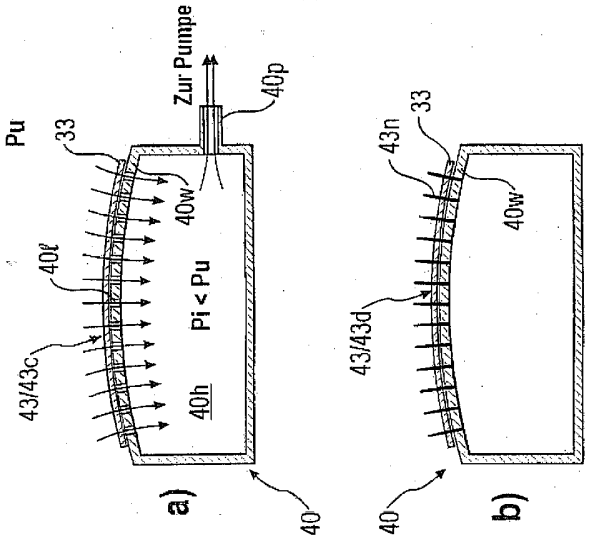
Pu
33
Zur Pumpe
40p
40w
40ℓ
Pi < Pu
43/43c
40h
a)
40
43n
33
40w
43/43d
40
b)

Fig. 4

Fig. 5

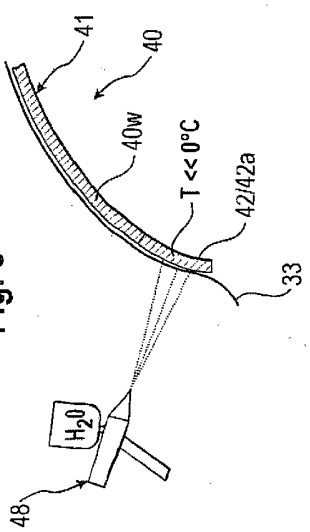

Fig. 6

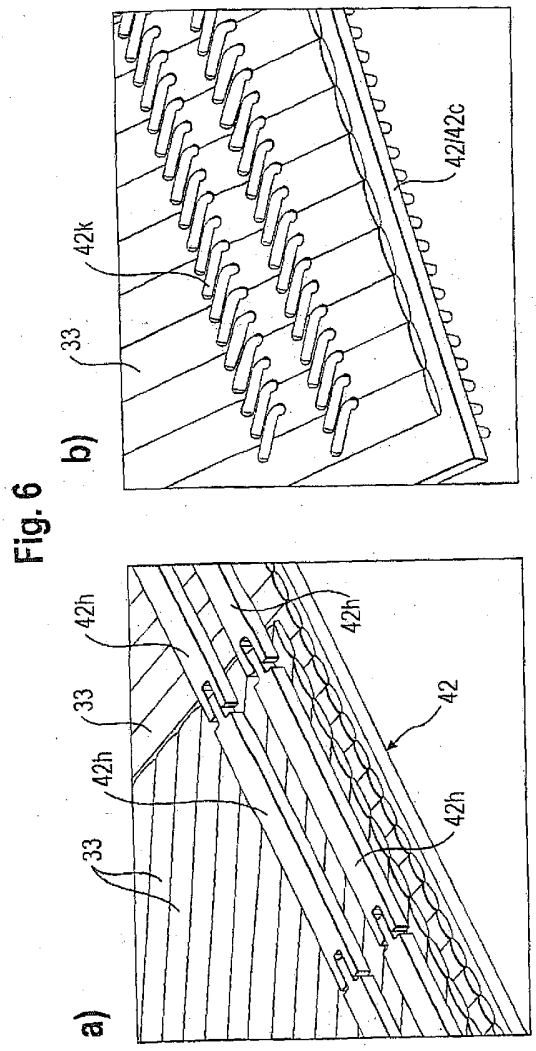

Fig. 7

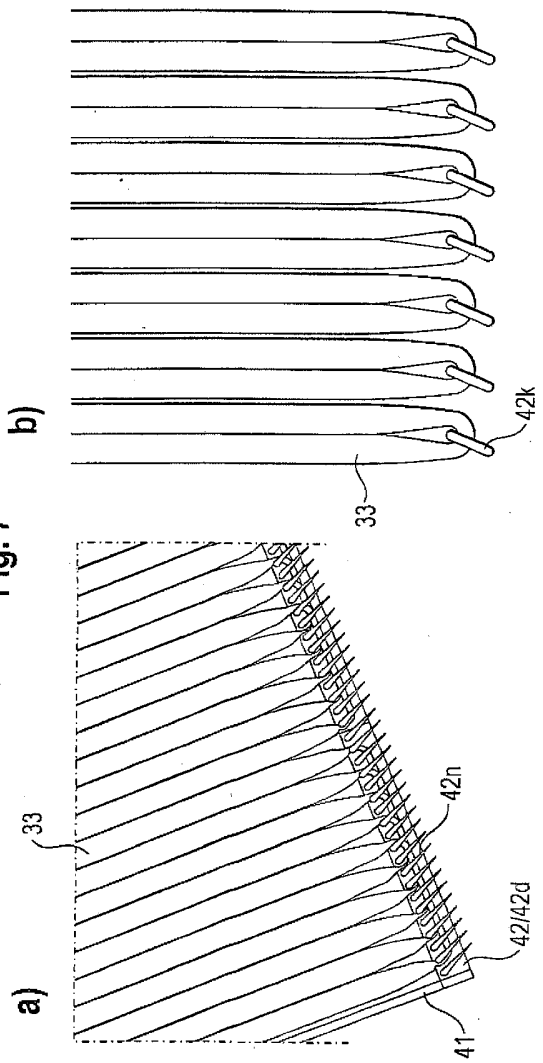

Fig. 8

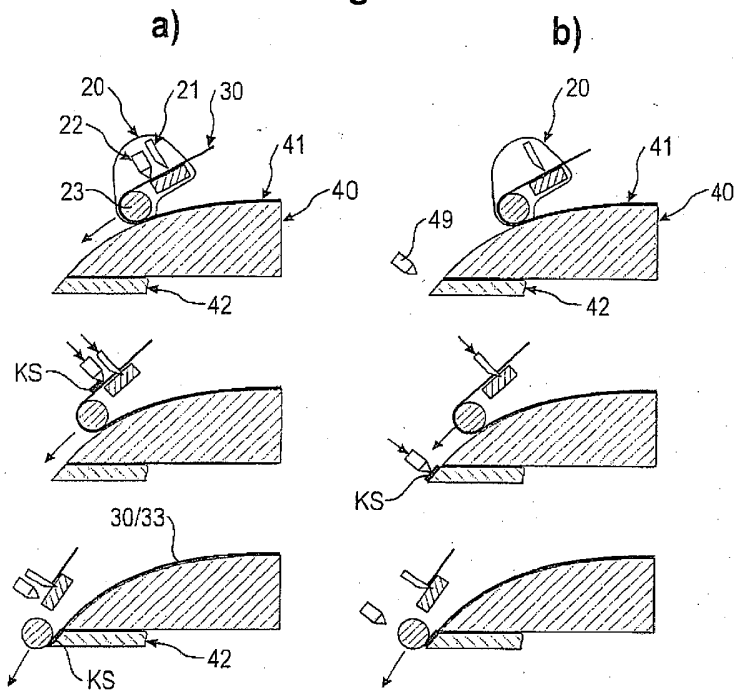

Fig. 9

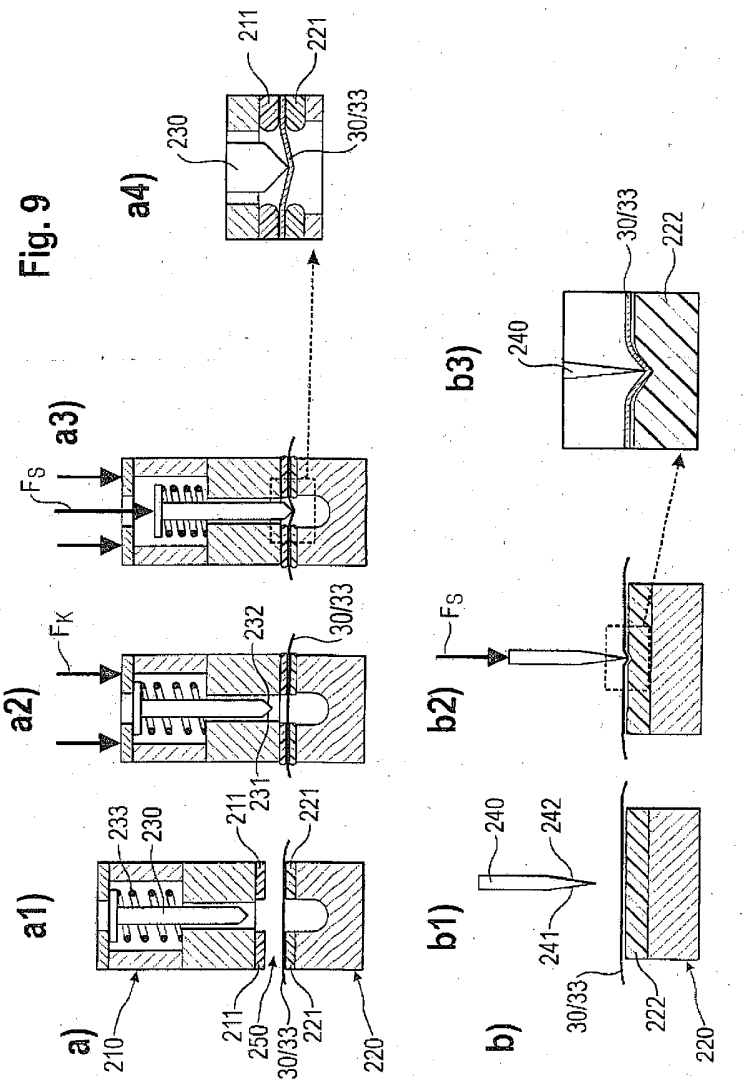
a)
a1)
a2)
a3)
a4)
b)
b1)
b2)
b3)
210
211
220
221
230
231
232
233
240
241
242
250
30/33
222
F_K
F_S

Fig. 10

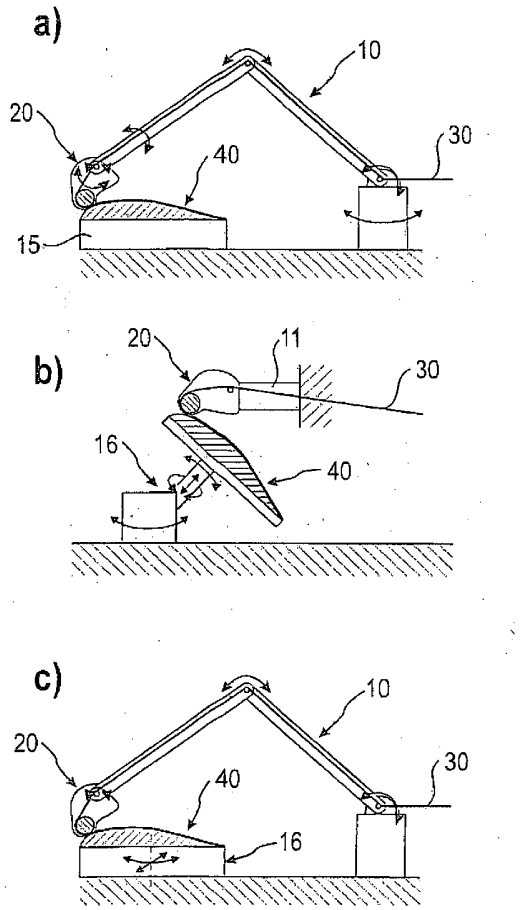

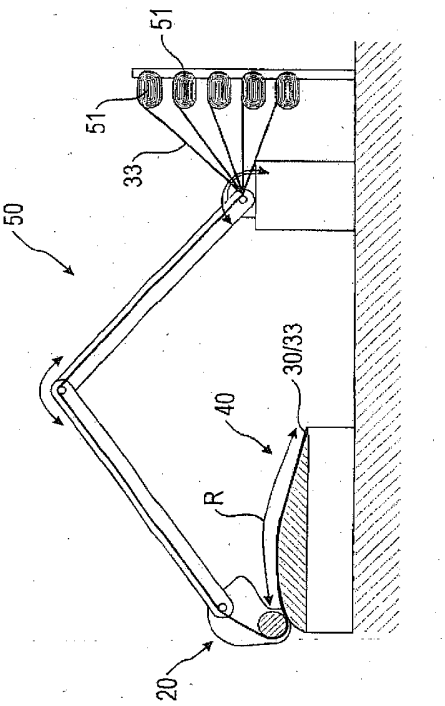

Fig. 11

Fig.12

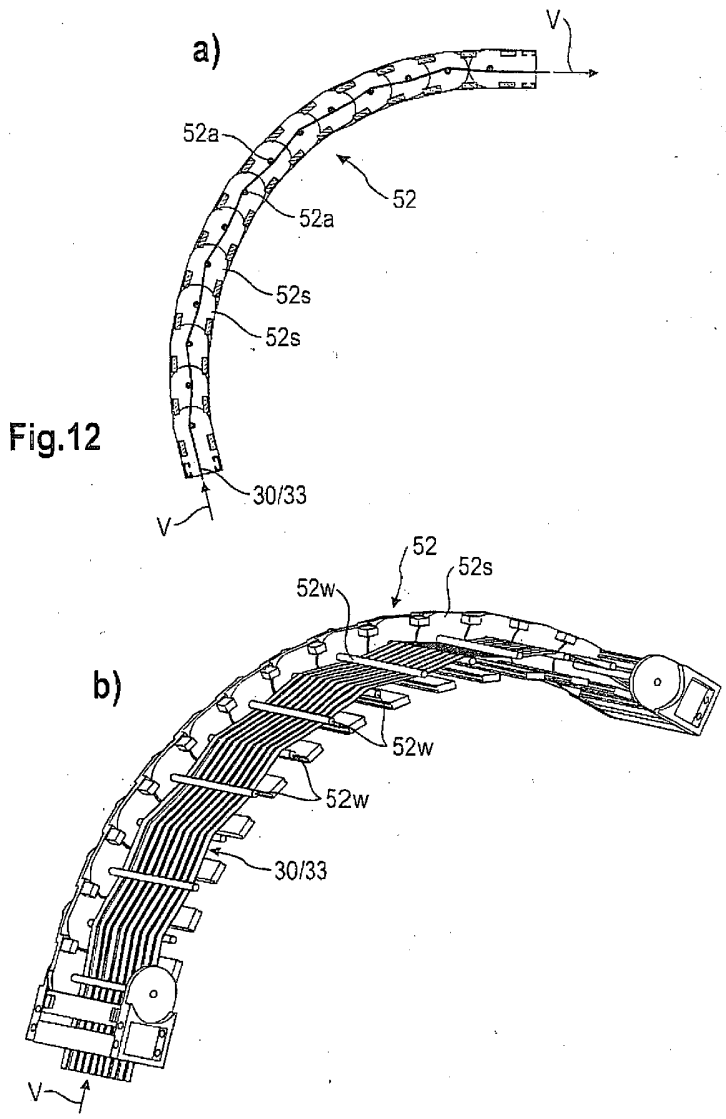

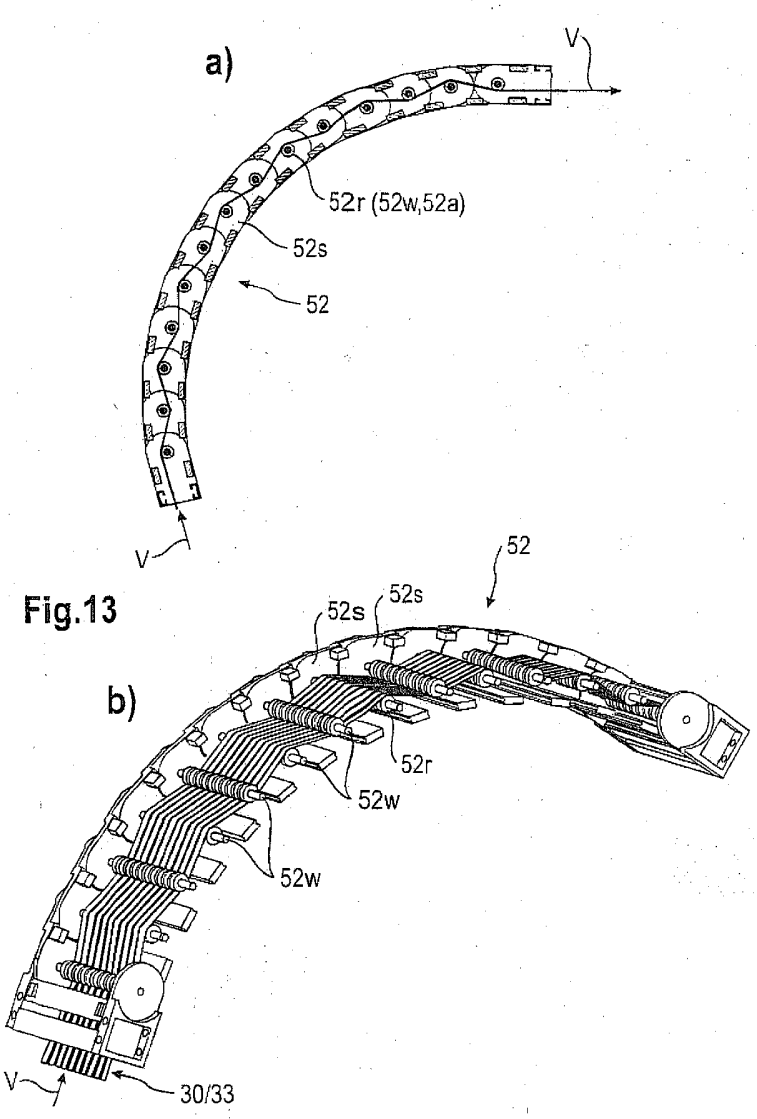

Fig.13

Fig. 14

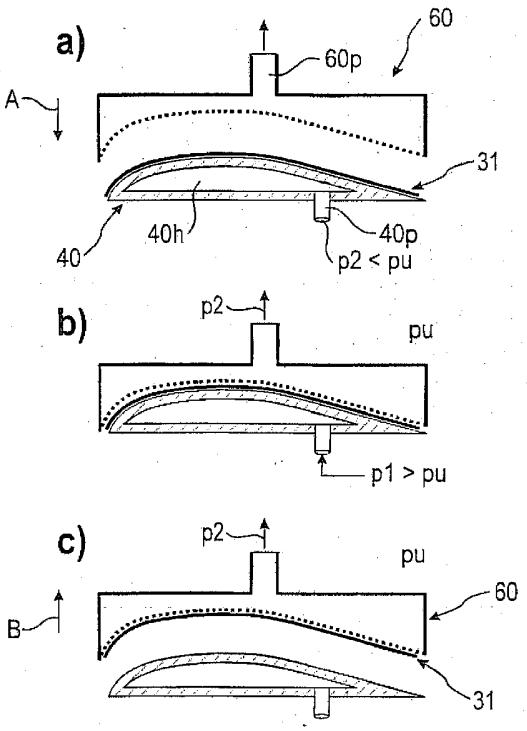

Fig. 15

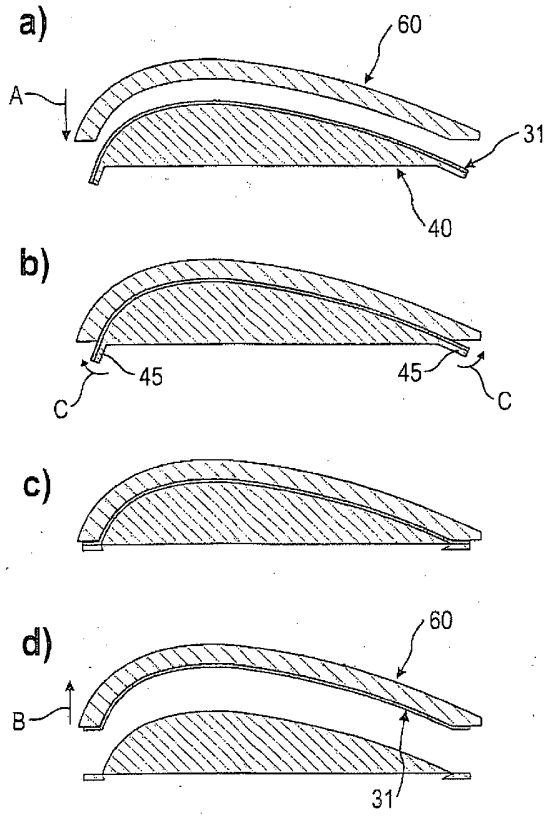

Fig. 16

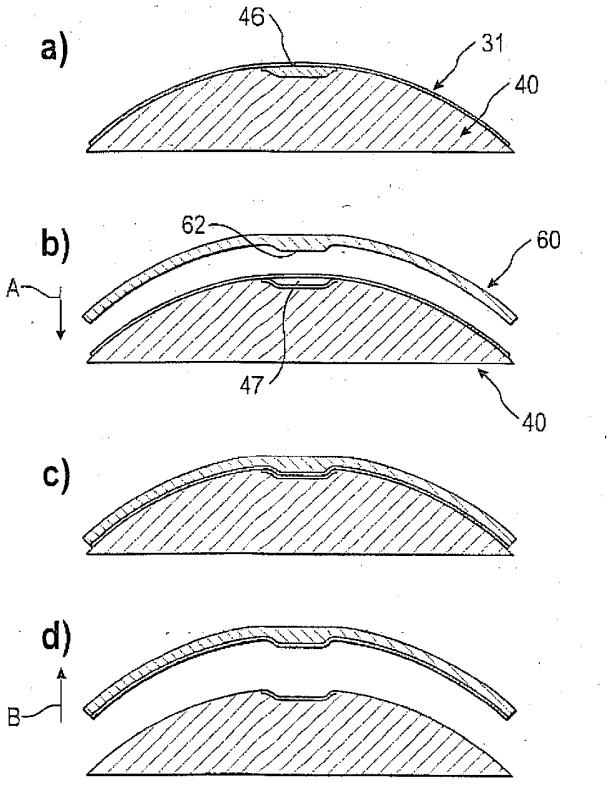

Fig. 17

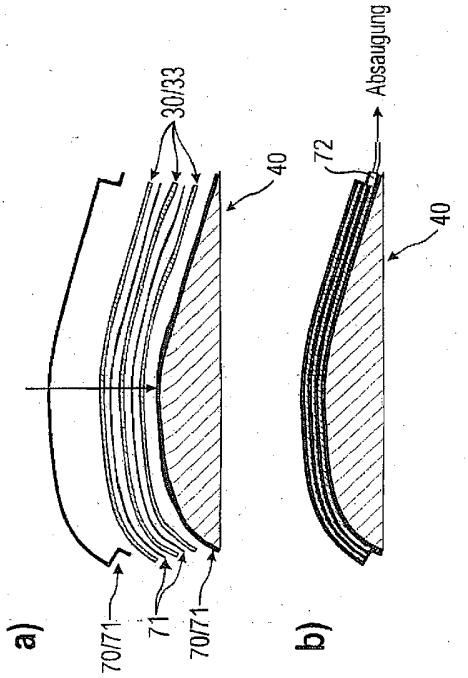

Fig. 18

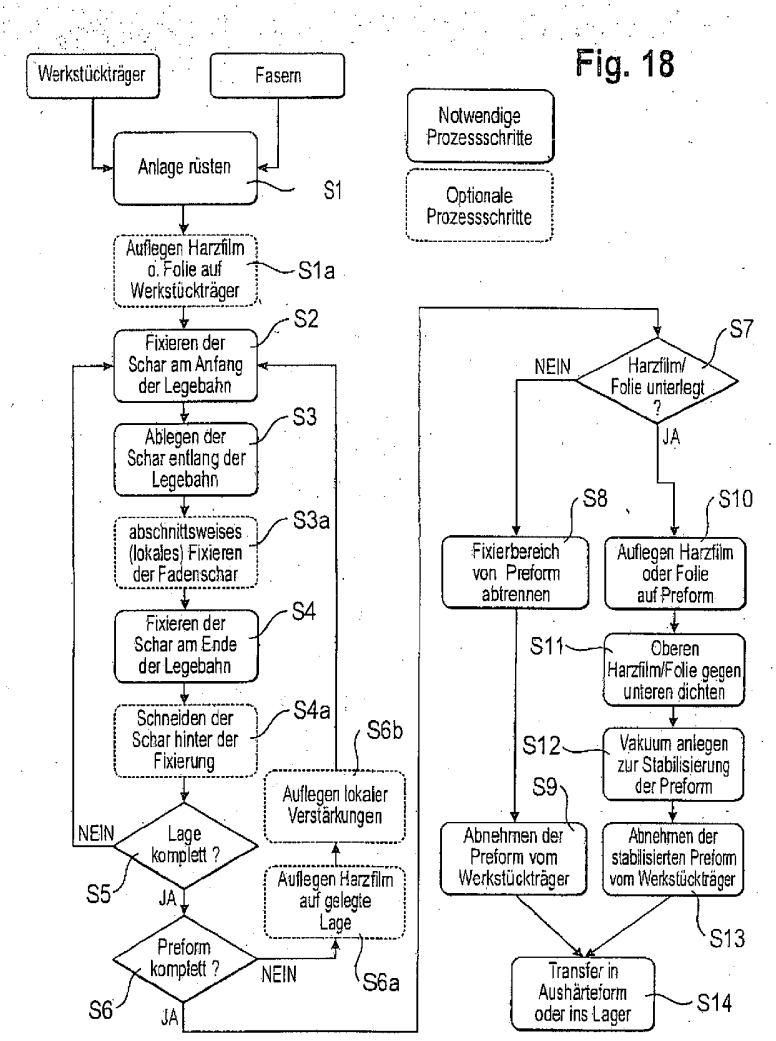
Werkstückträger
Fasern
Anlage rüsten
S1
Auflegen Harzfilm o. Folie auf Werkstückträger
S1a
Fixieren der Schar am Anfang der Legebahn
S2
Ablegen der Schar entlang der Legebahn
S3
abschnittsweises (lokales) Fixieren der Fadenschar
S3a
Fixieren der Schar am Ende der Legebahn
S4
Schneiden der Schar hinter der Fixierung
S4a
Auflegen lokaler Verstärkungen
S6b
NEIN
Lage komplett ?
S5
JA
Auflegen Harzfilm auf gelegte Lage
Preform komplett ?
NEIN
S6a
S6
JA
Notwendige Prozessschritte
Optionale Prozessschritte
NEIN
Harzfilm/ Folie unterlegt ?
S7
JA
S8
S10
Fixierbereich von Preform abtrennen
Auflegen Harzfilm oder Folie auf Preform
S11
Oberen Harzfilm/Folie gegen unteren dichten
S12
Vakuum anlegen zur Stabilisierung der Preform
S9
Abnehmen der Preform vom Werkstückträger
Abnehmen der stabilisierten Preform vom Werkstückträger
S13
Transfer in Aushärteform oder ins Lager
S14

Fig. 19

