July 29, 1958 O. ASSMANN 2,844,858

CERAMIC PRESS

Filed July 13, 1955 7 Sheets-Sheet 1

Fig. 1

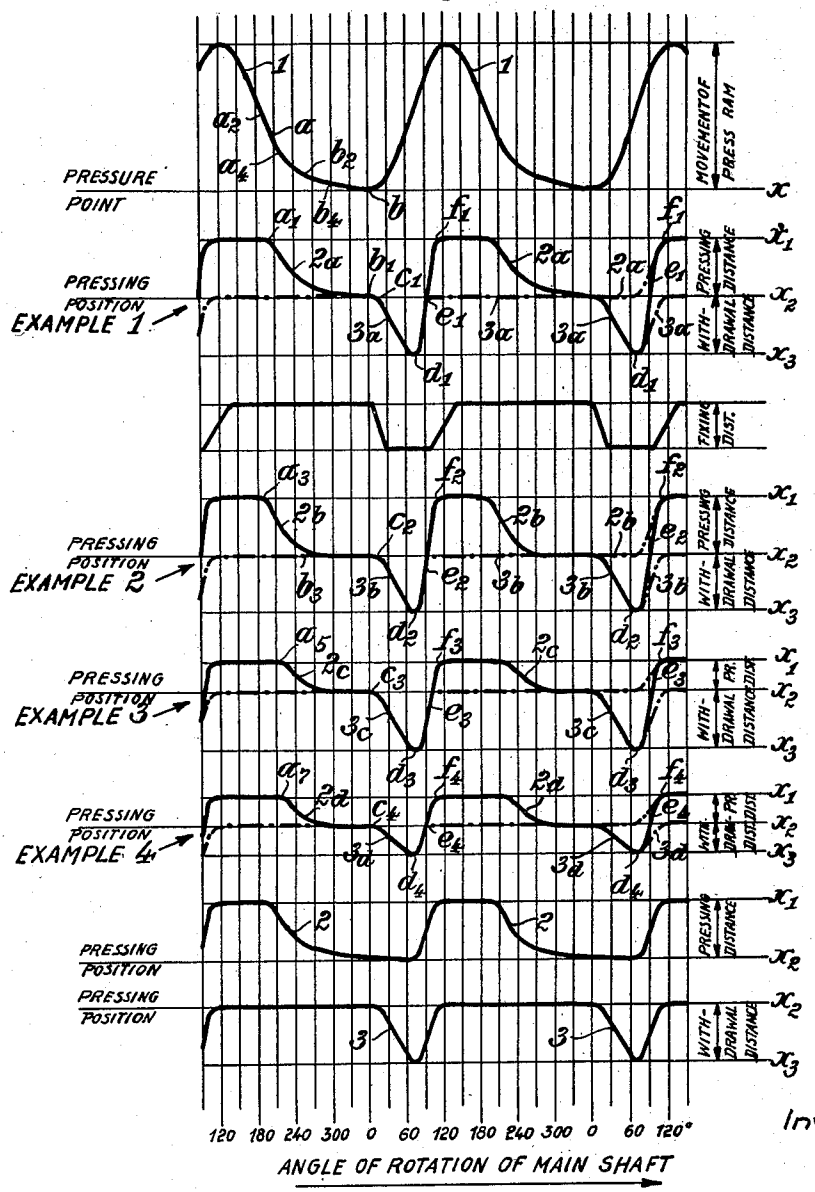

Inventor

O. Assmann

By Glascock Downing Seibold

Attys.

July 29, 1958 O. ASSMANN 2,844,858

CERAMIC PRESS

Filed July 13, 1955 7 Sheets-Sheet 2

Fig. 2

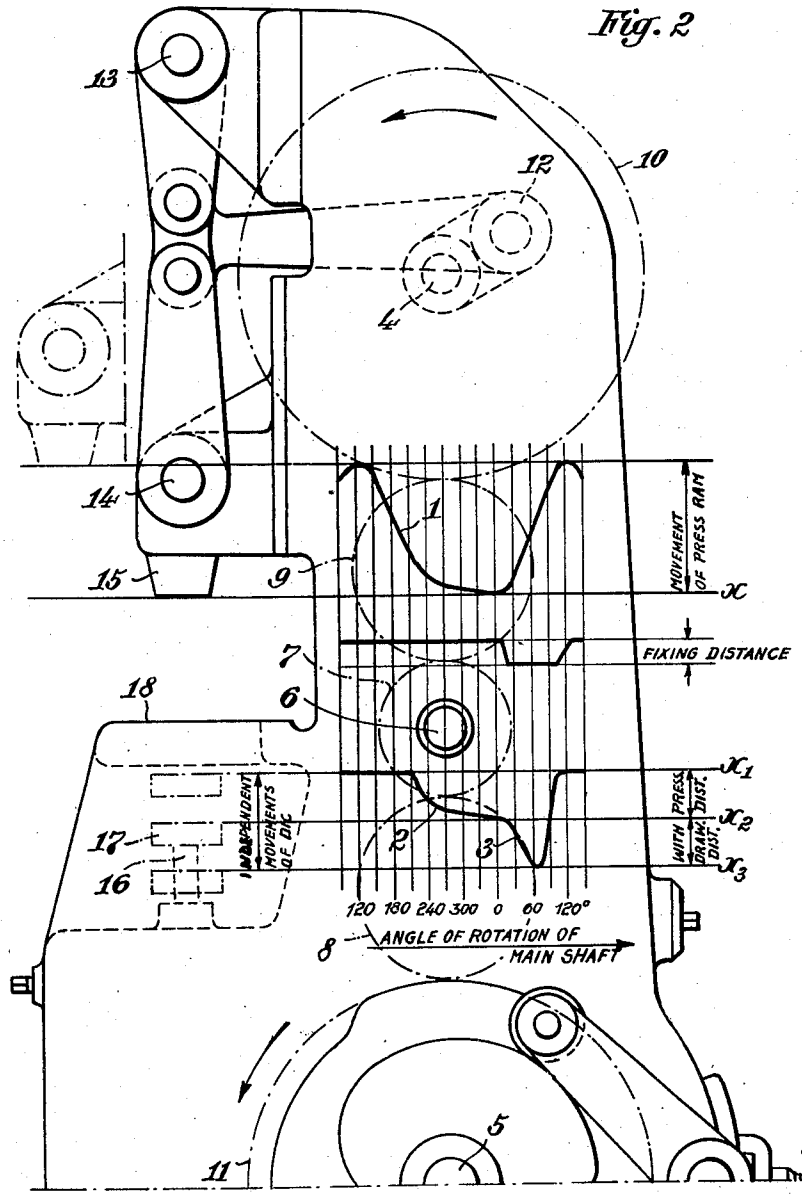

Inventor

O. Assmann

By Glascock Downing & Seibold

Attys.

July 29, 1958 O. ASSMANN 2,844,858

CERAMIC PRESS

Filed July 13, 1955 7 Sheets-Sheet 3

Fig. 4

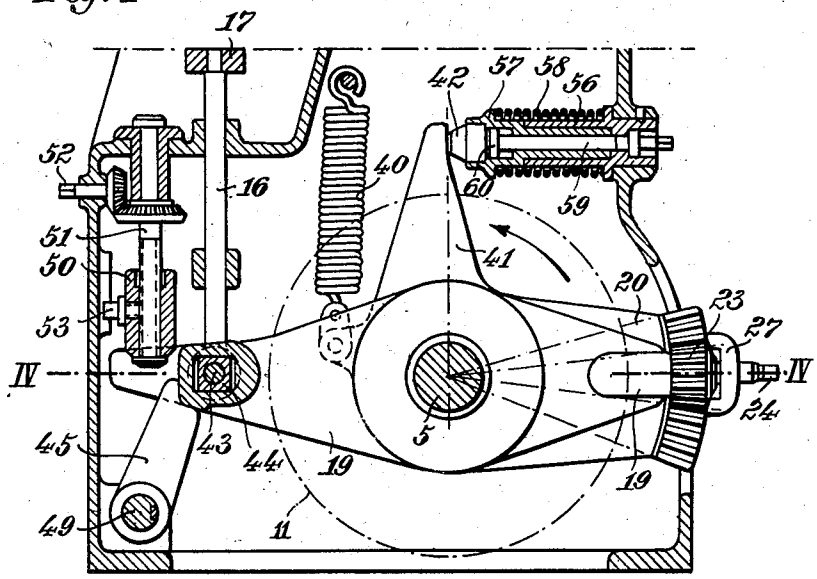

Fig. 3

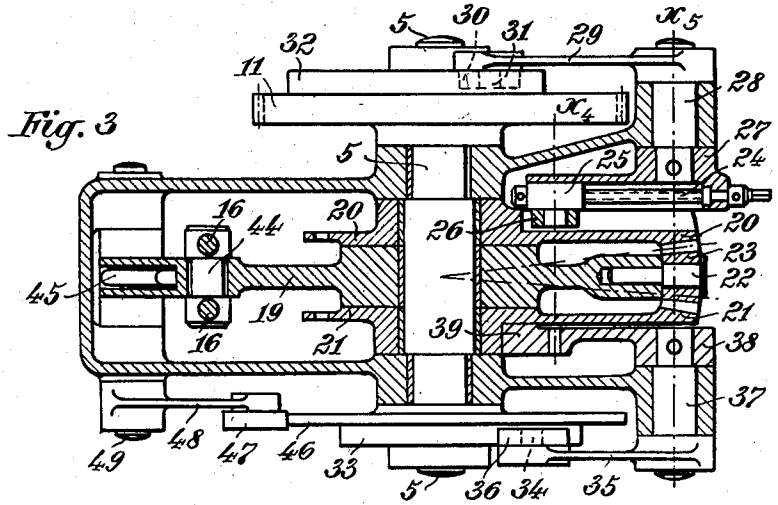

Inventor

O. Assmann

By Glascock Downing Seebold

Attys.

July 29, 1958 O. ASSMANN 2,844,858

CERAMIC PRESS

Filed July 13, 1955 7 Sheets-Sheet 4

Fig. 6

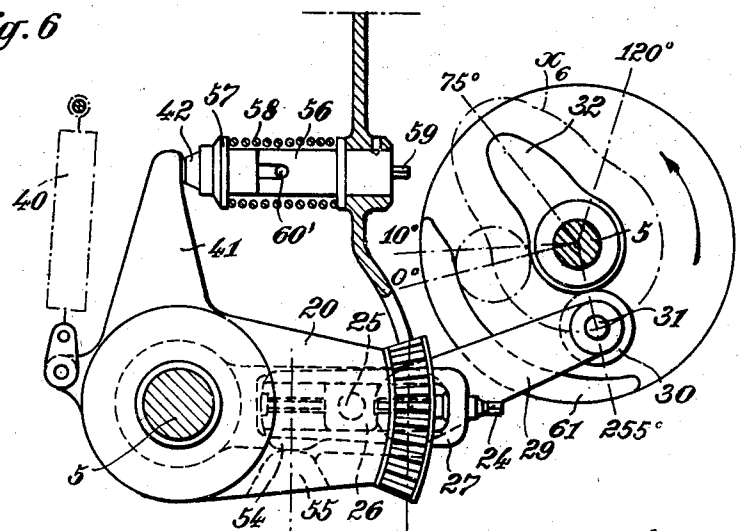

Fig. 5

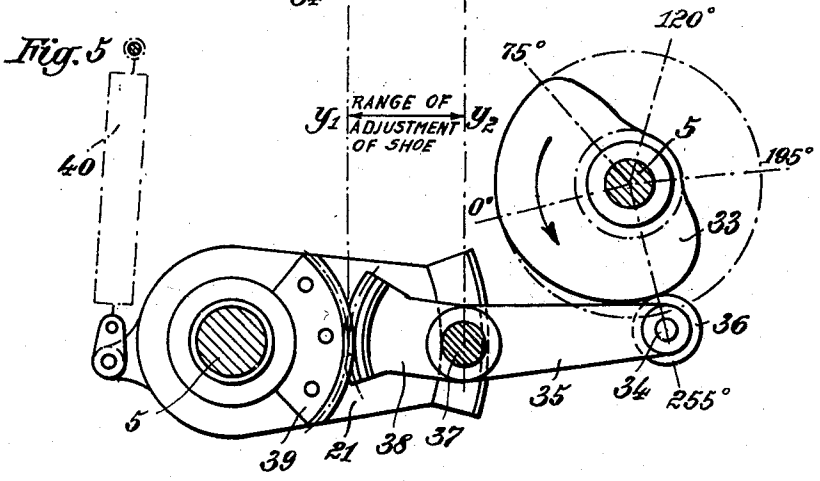

Inventor

O. Assmann

By Glascock Downing & Seibold

Attys.

July 29, 1958 O. ASSMANN 2,844,858

CERAMIC PRESS

Filed July 13, 1955 7 Sheets-Sheet 5

Fig. 8

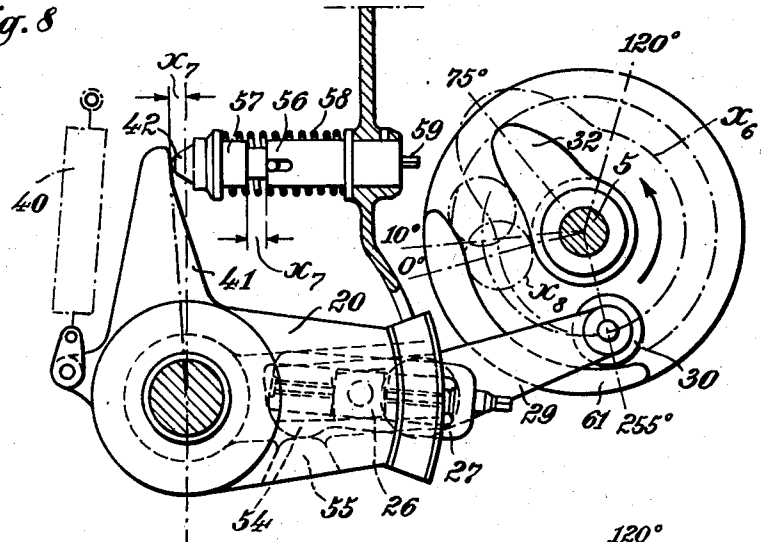

Fig. 7

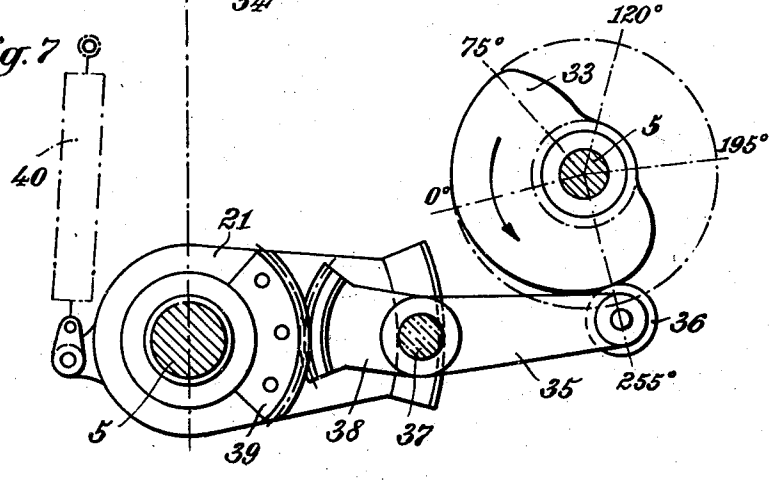

Inventor

O. Assmann

By Glascock Downing & Seibold

Attys.

July 29, 1958 O. ASSMANN 2,844,858

CERAMIC PRESS

Filed July 13, 1955 7 Sheets-Sheet 6

Fig. 9

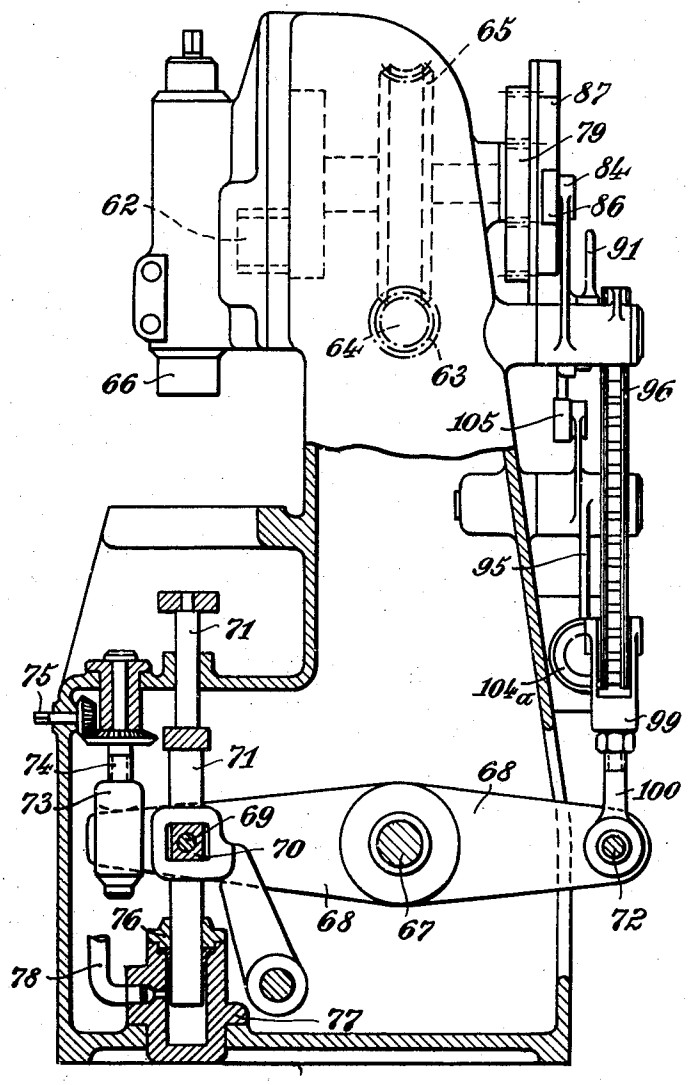

Inventor

O. Assmann

By Prescott Downing & Penfield

Attys.

July 29, 1958 O. ASSMANN 2,844,858
CERAMIC PRESS
Filed July 13, 1955 7 Sheets-Sheet 7

Fig. 10

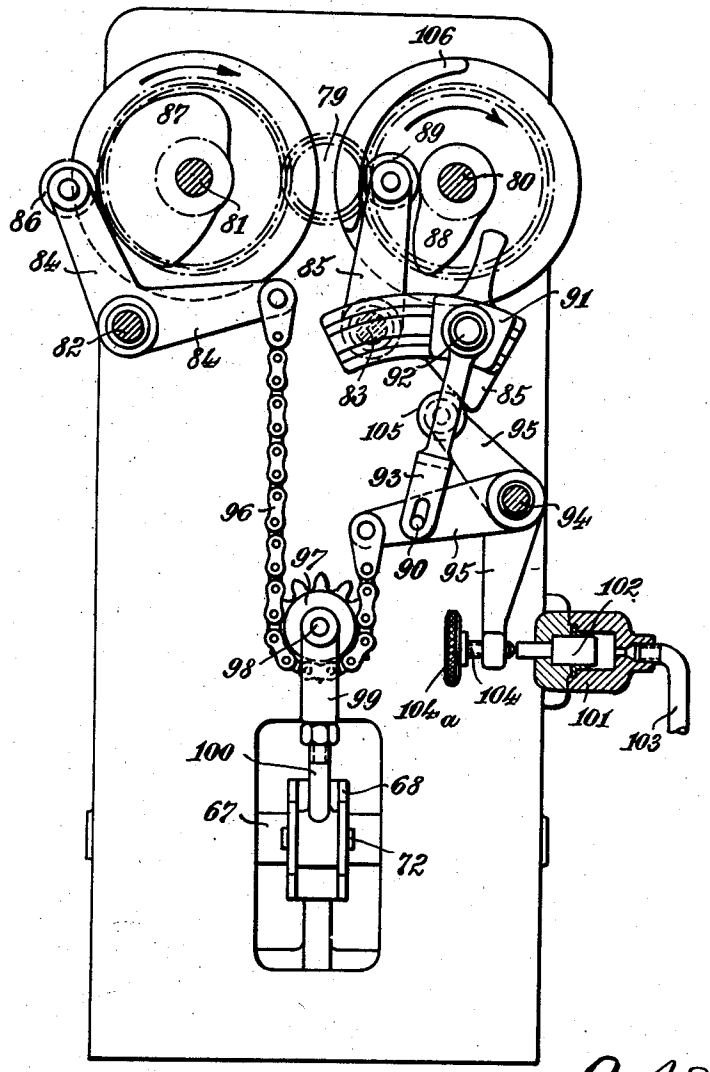

Inventor
O. Assmann
By Glascock Downing & Seebold
Attys.

United States Patent Office

2,844,858

Patented July 29, 1958

2,844,858

CERAMIC PRESS

Otto Assmann, Selb, Bavaria, Germany, assignor to Dorst-Keramikmaschinen-Bau, Kochel, Upper Bavaria, Germany, a partnership

Application July 13, 1955, Serial No. 521,862

Claims priority, application Germany July 13, 1954

5 Claims. (Cl. 25—93)

The present invention relates to a press which is adapted for continuous operation for producing molded objects, for example, insulators and other parts of ceramic materials in a dry, pulverized state.

Although a variety of automatic presses are known for this purpose, most of them have the serious disadvantage that the pressing tools or dies thereof only permit the molding of objects of only one shape, and require a considerable length of time for exchanging the respective tools if an object of a different shape is to be molded, since the operating parts of the machine also have to be exchanged, adjusted, or modified so as to comply with the requirements of the new tools.

It is obvious that such operations decrease the efficiency of the machine considerably and in many different respects, particularly also because they require very experienced workers to be done properly.

Other automatic presses have already been proposed which do not require the operating parts of the machine to be exchanged when switching over from the production of one object to another, since the necessary changes in motion may be carried out by an adjustment of the periods of engagement of the machine parts which move the tools, and since the respective stroke length of the tools may be infinitely varied by a lever mechanism. Although such a machine has proved successful, its applicability is quite limited since the control of the tools which is thus obtained does, in many cases, not permit the production of articles which have been molded so as to comply with the highest standards.

These types of machines also have the disadvantage that the adjustments of the pressing tools or dies have to be carried out by a person of considerable experience and aptitude, since usually several adjustments have to be tried out before the individual tools and operating parts will be in the proper position so as to move correctly relative to each other. The difficulties encountered in such adjustment will be subsequently described, with reference to Fig. 1 which also illustrates the basic requirements which have to be fulfilled by an automatic dry-molding press which is universally adjustable.

The pressing tool consists of an upper die and a lower die. The upper die is mounted on the press ram of the machine, while the lower die is clamped on the stationary machine table and vertically below the upper die. The jacket of the lower die is vertically below the upper die. The jacket of the lower die is vertically adjustable and, since it is connected to the withdrawal bar of the machine, it carries out its own independent movements during the pressing operation.

Curve **1** in Fig. 1 illustrates the course of movement of the press ram together with the upper die during the operation of the machine. This is a positive movement which is produced by a double jointed bell crank. Curves **2***a* and **3***a* show the course of the independent movements of the lower die during a pressing operation without finishing compression of the molded object, i. e.

without any so-called "precompression." This movement of the jacket of the lower die is produced by machine parts which are connected in a special manner and is composed of the two movements which are produced independently of each other according to curves **2** and **3** relative to curves **2***a* and **3***a*.

According to Example 1, the lower die which is filled with molding material is disposed in the filling position at the level x, where it remains until the press ram has been lowered according to curve **1** to the point a which corresponds to the position a_1 of the lower die. After the upper die has then penetrated into the lower die, both parts carry out the same movement until they reach the position b, i. e. the compression point of the upper die according to curve **1** at the level x, or the position b_1 of the lower die according to curve 2_a at the level x_2, respectively, at which position they come to a short stop. At the beginning of the return movement of the press ram, the jacket of the lower die remains in the pressing position at the level x_2 until the molded object has been relieved of the pressure to such an extent that it is able to swell sufficiently. At the point c_1, a further downward movement of the jacket of the lower die will start according to curve 3_a. This movement releases the molded object from the mold of the lower die. Such lowering movement terminates at the point d_1 at the level x_3. The molded object may then be removed from the lower die either by hand or mechanically before the jacket of the lower die begins its return movements. Thereafter, the lower die returns from the position d_1 to the position f, i. e. to the filling position, where the mold is again filled mechanically with molding material, whereupon the entire molding process is repeated.

The course of the molding movements according to Example 1 is, however, suitable only for molding operations without precompression, i. e. for molding of objects of simple shape and low height. Generally, however, and especially for high molded objects, a precompression or premolding will be required since the object can be given a uniform density only in such a manner. In such premolding, the pressing operations are controlled in such a manner that the independent movement of the lower die jacket to the level x_2 does not proceed together with the press ram, but already prior to the time when the latter reaches its lowest position. The last compressing operation is thus carried out only by the press ram alone with the jacket of the lower die stopping at the level x_2. The length of stroke of the premolding operation differs with each tool and must therefore be infinitely variable on the machine from a maximum of about 10 mm. to zero.

Example 2 illustrates the course of the independent movement of the jacket of the lower die at the largest possible premolding operation. The jacket already leaves the filling position at the position a_3 which corresponds to the position a_2 of the press ram, wherein the distance a_2 of the press ram is equal to the distance of the lower die from such position plus the largest possible premolding movement. When the upper die reaches the position b_2, at the jacket of the lower die will already be in the pressing position b_3, where it remains until the position c_2 is reached, so that the press ram carried out the supplementary or finishing compression of the molded object during its movement from the position b_2 to the position b according to curve **1**.

In view of the many different shapes of the objects to be molded, not only the premolding but also the independent movements of the jacket of the lower die must be infinitely variable separately of each other according to curve **2** and curve **3** between their maximum stroke and zero.

Examples 3 and 4 illustrate the independent movement of the jacket of the lower die with an arbitrary premolding and shortened pressing or withdrawal movements. The filling level of the lower die or the extent of the pressing movement thereof are shortened in accordance with a smaller height of the molded object to be formed. The curve shows that, independently of the extent of the pressing movement of the jacket of the lower die, it is necessary that the movements of the press ram and the jacket of the lower die be in absolute synchronism with each other up to the beginning of an arbitrary premolding operation.

Example 4 illustrates the shortening of the withdrawal movement of the jacket of the lower die according to curve 3_d. In this connection it is important that the pressing position of the jacket, i. e. the height x_2, is always the same at any adjustment of the premolding operation, the pressing movement, and the withdrawal movement of any kind of dies. The distances of both the height x, as well as of the height x_3 from the pressing position at the height x_2 are therefore variable. If the extent of the pressing movement and of the withdrawal movement is zero, the height x, and x_3 coincide with the pressing position x_2, which means that the jacket of the lower die does not move, so that it will be considerably easier to mount the die. Also, both the upper and lower dies may then be accurately aligned, without danger to the tools while the machine is running.

The present invention permits any of the adjustment to be carried out as indicated, for instance, in Examples 1 to 4, and thus completely fulfills all the requirements to be made upon an automatic dry-molding press which is universally applicable. The machine permits the adjustment of any kind of premolding operations or of the pressing and withdrawal movements to any length of stroke without requiring any exchange, adjustment or modification of the operating parts of the machine. It also permits the tools to be set up within the shortest possible time, without any appreciable interruption of the production, and by workers which have only been trained on the job and only possess a minor education. Corrections in movement because of a change in the molding material or for any other reason may be carried out without interruption of the pressing or molding operation while the machine continues to run. The molding movements which are always accurate for any course of movement of any type of molds not only assure a perfect quality of the molded object but also permit a quicker succession of the operations so that in connection with the relatively short setup times of the tools which may be obtained, it will be possible to increase the rate of production considerably.

The above-mentioned objects of the invention are principally attained by an infinitely variable adjustment of the premolding, molding, and withdrawal movements without change of the molding position of the respective jacket of the lower die relative to the machine itself.

Further objects, features, and advantages of the invention will be apparent from the following detailed description thereof which is to be read with particular reference to Fig. 1 as already described in principle and to the other accompanying drawings, wherein—

Fig. 1 shows a graphic illustration of the operating steps of an automatic dry-molding press according to the invention with four different working examples;

Fig. 2 shows diagrammatically one embodiment of the invention with a press ram and a withdrawal rod, and graphically illustrates the course of the movements of the upper die and the jacket of the lower die in accordance with Example 1 in Fig. 1;

Fig. 3 shows a horizontal cross section taken along line IV—IV of Fig. 4 through the withdrawal rod mounted in the machine housing and the mechanism for producing and coupling the independent movements of the pressing tools according to Example 1 in Fig. 1;

Fig. 4 shows a vertical cross section through the mechanism as shown in Fig. 3;

Fig. 5 shows the design of the compensating bevel gear sector for carrying out the pressing or molding movement of the molding tool, with the pressing cam shown in displaced position, and in the position corresponding to the angle of rotation of the withdrawal cam shown in Fig. 6;

Fig. 6 shows the design and the position of the compensating bevel gear sector for carrying out the withdrawal movement of the molding tool by means of the withdrawal cam shown in displaced position without consideration of a premolding operation;

Fig. 7 shows the unchanged molding position of the operating parts as shown in Fig. 5 when the largest possible premolding movement has been set up;

Fig. 8 shows the operating parts shown in Fig. 6 when the largest possible premolding movement has been set up;

Fig. 9 shows partly in a side view and partly in a vertical cross section, the design and arrangement of the press ram and the withdrawal rod, as well as parts of the mechanism for producing and coupling the independent movements of the molding tool according to a modification of the invention; while

Fig. 10 shows a rear view of the machine according to Fig. 9 with the molding and withdrawal cams which are driven in synchronism, and with the members for compensating the course of the independent movements of the molding tool.

Referring to the drawings, and first particularly to Fig. 2, the crankshaft **4** and the main shaft **5** are driven in synchronism in the direction shown by the arrows by means of the shaft **6** through a pinion **7** and the intermediate gears **8** and **9**, as well as the gears **10** and **11**. Crank **12** operates the double-jointed bell crank which is suspended on a pivot **13** and thus drives the upper die **15** which is pivotally mounted on the double-jointed bell crank by a pin **14** and slidable in a vertical direction in a slide track of the upright of the machine so as to carry out a continuous reciprocating movement similar to operating curve **1** as graphically illustrated. The course of movement of the upper die **15** does not vary. The lower housing of the machine contains the elements necessary for producing the independent movements of the die. These movements are produced by cams which are laterally keyed on the main shaft **5**, and are transmitted to the withdrawal rod **16** by means of a variable compensating gear. The lower die which is clamped on the table **18** is provided with a vertically slidable jacket which is bolted by means of a connecting rod to the mounting bridge **17** of the withdrawal rod **16** and carries out the movements as graphically illustrated by curves **2** and **3**. These independent movements of the die are of varying size and must be infinitely variable between their maximum size and zero without change of the pressing position of the die, i. e. of the height x_2, when the extent of movement is shortened and an arbitrary premolding operation is set up.

Figs. 3 and 4, respectively show horizontal and vertical cross sections through the machine housing and illustrate the design and arrangement of the parts which produce and couple the necessary independent movements of the die.

The compensating lever **19**, the bevel gear sector **20**, and the bevel gear sector **21** are rotatably mounted on the main shaft **5** of the machine. A bevel gear **23** which is rotatably mounted on the journal **22** of the compensating lever **19** is in mesh with the bevel gear sectors **20** and **21**. A shoe **26** which is mounted on a projecting pin of a slide **25**, which is adjustable by a spindle **24** engages in aradially extending track on the bevel gear sector **20**. Slide **25** is movable in a slide track in lever **27**. Both parts thus form an adjustable crank, which has a radius of zero when the axis x_4 of the slide pin coincides with the axis x_5 of the journal **28**. This journal **28** is mounted on a stationary part of the machine housing and is rigidly

secured to a crank arm **29** which transmits a pivotal movement of constant angle and uniform motion to lever **27** which is produced by means of a roller **30** which is mounted on a pin **31** and rolls along a withdrawal cam **32**. By changing the radius of the crank arm formed of the slide **25** and lever **27** it is possible arbitrarily to adjust the angle of the pivotal movement transmitted by shoe **26** to the bevel gear sector **20**.

The stroke produced by the pressing or molding cam **33** which is likewise keyed on main shaft **5** is transmitted by the roller **36** which is mounted on a pin **34** on the crank arm **35**, through a journal **37** to the spur gear sector **38** which transmits an invariable pivotal movement to a spur gear sector **39** and thus to the bevel gear sector **21** which is bolted thereto. The bevel gear sectors **20** and **21** are held under tension by springs **40** so that the rollers **30** and **36** are held in constant engagement with the withdrawal cam **32** and the pressing cam **33**, respectively. In the pressing position of the machine, as shown in Figs. 3 and 4, compensating lever **19** is disposed horizontally and thus likewise the bevel gear sector **20**. In this position it is possible to shift the shoe **26** of slide **25** in its slide track by turning spindle **24** wthout thereby pivoting the bevel gear sector **20**. The slide track of shoe **26** and that of lever **27** are therefore parallel to each other. In the pressing position, cam **41** which is rigidly secured to bevel gear sector **20** is disposed in a vertical position, as shown in Fig. 4, and rests against a pin **42** of the mechanism for adjusting the pre-molding operation in such a manner that the operating parts for producing the independent movements of the die will not be affected by such adjustments. As shown in Fig. 3, withdrawal rod **16** is pivotally mounted on compensating lever **19** by means of a pin **43** and a shoe **44** so that the pivotal movement of the compensating lever is freely converted into a vertical movement of the withdrawal rod **16**. If the main shaft **5** which is driven by gear **11** turns in the direction indicated by the arrow, roller **30** rolls along the withdrawal cam **32**, as shown particularly in Fig. 6, whereby such motion is transmitted through crank arm **29** to the bevel gear sector **20** to pivot the same in accordance with the radius to which the crank has been adjusted by means of the shoe **26**. If the bevel gear sector **21** is at rest at this phase of the operation, bevel gear **23** rotates between the two gear sectors and pivots the compensating lever **19** about half of the pivotal angle of bevel gear segment **20** and in the same direction. After supporting lever **45** has been mechanically disengaged, compensating lever **19** then transmits a lowering or withdrawal movement to rod **16** in accordance with the graphical illustration of curve **3** in Fig. 1, the returning movement then being carried out by the tension springs **40**. The movement of supporting lever **45** is controlled by a cam **46** through the roller **47**, the arm **48**, and the shaft **49** which is mounted on the housing of the machine. When in its locking position, supporting lever **45** protects the compensating gear from excessive loads from the pressure of the upper die in the event that the two parts of the die are not properly aligned with each other.

As shown in Fig. 4, compensating lever **19** is maintained in the pressing position by the threaded socket **50**. If the withdrawal rod **16** with the die thereon is to be moved into the filling position, this is done by turning a crank on the bevel gear shaft **52** and thus turning spindle **51**. An accurate adjustment from zero to the maximum filling level may be obtained by means of a vernier scale, the socket **50** being supported by a guide bolt **53**. Compensating lever **19** may thus pivot, the pivotal movement thereof being produced by spring **40** acting on the bevel gear sector **20**, so that the latter will roll along the bevel gear **23**. The arrangement of the bevel gear thus adjusts itself in accordance with the adjustment of the filling level. When the main shaft **5** of the machine turns, the press ram which is driven in synchronism with the compensating gear is lowered until the upper die enters into the mold of the lower die. In such angular position of main shaft **5**, roller **36** will roll along the pressing cam **33** to move the withdrawal rod **16** positively and against the action of springs **40** into the pressing position in accordance with curve **2** of Fig. 1.

Fig. 5 shows the bevel gear sector **21** which is acted upon by spring **40**, in an angular position of main shaft **5** of approximately 255° corresponding to the abscissa shown in Fig. 1, while Fig. 6 shows the position of bevel gear sector **20** with cam **41** in the same angular position of main shaft **5**. Shoe **26** in the slide track of bevel gear sector **20** is shown as being set to half of its full stroke. Through the action of springs **40**, rollers **36** and **30** engage the withdrawal cam **33** and the pressing cam **32**, respectively. In this angular position of main shaft **5**, the press ram and withdrawal rod **16** will move uniformly and in the same direction. After a further rotary movement of main shaft **5**, the compressing operation will be completed when it arrives in the position 0°. The pressing cam **33** rotates up to the angular position 75° without exerting a stroke. Within the range of 255° to 0°, withdrawal rod **16** remains without movement in the pressing position and does not begin the withdrawal movement until cam **32** is in the angular position of 10°. The withdrawal height x_3 according to the curves shown in Fig. 1 will be attained when cam **33** has reached the angular position of 75°. The distance between the pressing position and withdrawal end position is dependent upon the respective adjustment of the radius of the crank arm formed of the slide **25** and the lever **27**. The descending parts of the cam up to the angular position of 120° return the withdrawal bar to the filling position of the die at the level x, according to the curves shown in Fig. 1. Between the angular positions of 120° and 195°, roller **36** abuts against cam **33** only if the maximum pressing stroke according to curve **2** in Fig. 1 has been set up. In all other cases, roller **36** will be clear of cam **33** and remain in a position corresponding to the respective pressure stroke level as adjusted.

Fig. 6 clearly illustrates the gate mechanism in bevel gear sector **20**. The shoe **26** only rests with its upper surface on the slide track. Tension springs **40** and roller **30** which engages with cam **32** maintain the gate mechanism in a horizontal position so that shoe **26** may be shifted within the distance of y_1 to y_2 without pivoting of the bevel gear sector **20**. The lower surface of shoe **26** does not engage the gate which means that bevel gear sector **20** may be pivoted upwardly to a certain extent without hindrance. Lever **27** is provided at the end position of shoe **26** on the line y, with a cam **54** which in the pressing position shown in Fig. 6 rests on an anvil **55** forming a part of sector **20**. Cams **54** and anvil **55** serve in connection with other elements for setting up an arbitrary premolding operation.

As may be seen from the above description it is therefore possible to vary the pressing and withdrawal movements uniformly and in the same direction as the movements of the press ram.

For adjusting the premolding operation, a special set-up device and a further auxiliary cam, the so-called premolding cam, are provided on the main withdrawal cam **32**. Fig. 4 illustrates the set-up device for the premolding operation in a cross section. A main socket **56** is secured by a pin in an aperture of the machine housing. A threaded socket **57** with the stop pin **42** thereon is slidably mounted in the main socket **56** and acted upon by a compression spring **58**. By turning a threaded spindle **59**, socket **57** may be shifted axially up to a stop **60** on spindle **59**. Spring **58** is of a strength so that if sufficiently tensioned it will overcome the strength of tension springs **40**.

Fig. 6 shows the threaded socket **57** as being set back to its end position by means of spindle **59**. A pin **60'** which is slidable in a slot in main socket **56** prevents socket **57** from being turned when spindle **59** is turned.

In the end position, stop pin **42** rests without pressure against cam **41** of the bevel gear sector **20**. The compressing operation of the machine is in such a case carried out without premolding. If a premolding operation is required, spindle **59** is turned by means of a crank until the desired degree of premolding is indicated on a vernier scale or any other suitable indicating device. The premolding operation may be set up during any phase of the operation of the machine without interrupting its continuous movement.

Fig. 8 shows the setup of the machine for a maximum premolding operation. After the force of tension spring **40** has been overcome by means of socket **57** together with the force of compression spring **58**, cam **41** has been pivoted about an angle x_7, whereby the bevel gear sector **20** has been turned likewise. Since cam **54** rests on anvil **55** of bevel gear sector **20**, such pivotal movement will also be transmitted to lever **27** and arm **29**. Thus, roller **30** will no longer engage the path of the withdrawal cam **32** but remain at a distance therefrom corresponding to the pivotal angle x_7 until it contacts the track of the premolding cam **61**, for example, in the angular position of 255° as illustrated in Fig. 8. Because of the pivoting of bevel gear sector **20**, bevel gear **23** rolls along the two bevel gear sectors which, in turn, changes the position of the operating parts. Since the compensating lever **19** is temporarily locked in the pressing position by the threaded socket **50** and the action of springs **40**, as shown in Fig. 4, bevel gear sector **21** will carry out a pivotal movement in the opposite direction so that, as shown in Fig. 7, rollers **36** on the arm **35** will assume a different position relative to the path of movement of pressing cam **33**. During this time, as shown in Fig. 8, shoe **26** is unsupported in the gate. The adjustment of the premolding does not affect the pressure path of curve **2** in Fig. 1 since this is only dependent upon the adjustment of the threaded socket **50**. As shown in Figs. 7 and 8, the premolding step is carried out during the operating phase between the angular positions of 195° and 255° of main shaft **5** of the machine and with uniform and unidirectional movements of the press ram and the withdrawal rod. Until this time, roller **30** remained along the cam path x_6 without exerting any stroke. In the angular position of 255°, however, it engages with the premolding cam **61** and forces the bevel gear sector **20** against the action of spring **58** to carry out a reverse pivotal movement corresponding to the positive movement of bevel gear sector **21**. In the pressing position, i. e. in the angular position of 0° of main shaft **5** of the machine, the two pivotal movements of the bevel gear sectors which compensate each other are terminated. The roller **30** engages at point x_8 again with the basic circular path of cam **32**, which means that the die is in the pressing position at the level x_2 of Fig. 1. During the reverse pivotal movement of the bevel gear sectors, bevel gear **23** rolls along the teeth of the sectors without thereby pivoting the compensating lever which in the angular position of 255° of the main shaft is already disposed in the position of rest, i. e. in the pressing position, since because of the premolding step it had already assumed a lower starting point in accordance with the adjustment of the premolding. Between the angular positions of 0° and 10°, roller **30** will be moved positively without stroke along withdrawal cam **32** and premolding cam **61**. The withdrawal movement does not begin until roller **30** has passed beyond the 10° position, and it continues up to the angular position of 75° of main shaft **5**. Then follows the reversal of the die to the filling position, i. e. the angular position of 75° of main shaft **5**. Then follows the reversal of the die to the filling position, i. e. the angular position of 120° of main shaft **5**. By shifting the threaded socket **57** from the end position x_7 to the stop at the front end of main socket **56**, any premolding distances from a maximum premolding to zero may be adjusted infinitely. The infinite variation of the pressing, withdrawing, and premolding movements without requiring any exchange or modification of the operating parts of the machine, as obtained according to the present invention, is not dependent upon the particular elements of the embodiment as above-described and may be carried out by other means, for example, by those of a second preferred embodiment of the invention which will now be described.

The press ram **66** of the machine shown in Fig. 9 is driven by a crank **62**. A worm **63** on the countershaft **64** drives a worm wheel **65** and a pinion **79**, and thus also the cams for producing the pressing and withdrawing movements of the machine. The movements of the press ram and the independent movements of the die are thus coupled positively and in synchronism with each other. Press ram **66** is designed as a slide and is vertically movable in the slide track of the upright of the machine. A shaft **67** which is mounted on a stationary part of the machine housing pivotally supports a beam **68** which is connected through a shaft **69** and a shoe **70** thereon with the withdrawal rod **71** of the machine, thus carrying the same. The other end of beam **68** carries a compensating rod which is pivotally mounted thereon by means of a shaft **72**. The adjustment of the filling level of the die corresponds to that described relative to the first embodiment of the invention, for which purpose the threaded socket **73** may be adjusted through a spindle **74** by means of a set of bevel gears which may be turned at **75** by means of a crank. The lower end of the withdrawal rod **71** forms a piston which passes through a cover **76** into a cylinder **77** which is supplied with a suitable pressure medium through a pipe **78** so as to force the withdrawal rod **71** in an upward direction. This modification of the invention illustrates that the draw spring **40** may be replaced by other means which produce the same effect, for example, by a hydraulic lift. Such hydraulic operation has the advantage that the entire withdrawal operation may be carried out with adjustable and constant pressure.

The rear of the machine, as shown in Fig. 10, carries the elements for producing, coupling and varying the independent movements of the die. The cams which are jointly driven in a clockwise direction by a pinion **79** are rotatably mounted on shafts **80** and **31**. Two further shafts **82** and **83** carry the bell cranks **84** and **85**, respectively. A roller **86** on bell crank **84** rolls along the pressing cams **87**. Bell crank **85** with a roller **89** engaging the withdrawal cam **88** is provided with a sector-shaped arm, the center of which, in the position as shown in Fig. 10, is disposed within the longitudinal axis of a pin **90**. The angular sector **85** is designed as a circular slide track along which a block **91** may be moved in a circular direction about pin **90**. Block **91** is provided with a handle end may be secured in a fixed position on the sector **85**. Block **91** carries a shaft **92** on which a draw bar **93** is pivotally mounted, the bifurcated end of which is connected through pin **90** with a three-armed lever **95** which is mounted on a shaft **94**. The oblong hole in draw bar **93** permits the premolding to be set up, and thus carries out the function of the gate on the bevel gear sector **20** according to the first embodiment. The bell cranks **84** and **85** are connected with each other by a chain **96** which extends over a chain gear **97** which is mounted on beam **68** by means of an axle pin **98**, a bifurcated member **99** and a draw bar **100**.

In place of the premolding adjustment by means of a compression spring, as shown in the first embodiment of the invention, the present modification thereof provides hydraulic adjusting means. For this purpose, a cylinder **101** with a piston **102** therein is mounted on the machine housing. A pressure medium may be supplied to cylinder **101** through a pipe **103**. Cylinder **101** is generally held under pressure, with piston **102** being in the position as shown in Fig. **10**. In such a case, the ma-

chine operates without premolding. The premolding operation is set by hand by means of a hand wheel **104***a* and by unscrewing of setscrew **104**. The action of hydraulic piston **102** is such that, through the leverage of the mechanism, a turning of hand wheel **104***a* will not adjust the position of piston **102**, but of the piston-shaped withdrawal rod **71** in cylinder **77**. Such adjustment raises the three-armed lever **95** which is connected to chain **96**, thereby pulling the same to rotate chain gear **97** and to draw bar **100** upwardly. Such movement is then transmitted to beam **68** and thus to withdrawal rod **71**. At the same time, roller **105** which engages with the cam on the bell crank **85** moves the roller **89** away from the path of the withdrawal cam **88** by an amount corresponding to the respective premolding adjustment. Similar to the premolding operation of the machine between the angular positions of 255° and 0° of main shaft **5**, according to the first embodiment of the invention, setscrew **104** will then force back the piston **102** along the distance of the premolding movement when roller **89** is positively moved back against the withdrawal cam **88** by the premolding cam **106**. The individual movements of the die are the same as those in the first embodiment and therefore do not need to be discussed again.

For adjusting the withdrawal movements it is necessary to shift block **91** along the sector of bell crank **85**. If the axis of shaft **92** coincides with the axis of shaft **83**, the withdrawal movement will be equal to zero. In this position it is likewise possible to set up any desired premolding movement.

Although my invention has been illustrated and described with reference to the preferred embodiments thereof, I wish to have it understood that it is in no way limited to the details of such embodiments or to the specific examples as described, but is capable of numerous modifications within the scope of the appended claims and depending primarily upon the respective demands to be made upon the various operating elements of the machine.

Having thus fully disclosed my invention, what I claim is:

1. A press having exchangeable dies for molding objects of dry pulverized ceramic materials which comprises in combination a press ram, means to drive said press ram, a shaft connected to be driven by said driving means, two cams shaped to cause separate movements for producing the motions of the die and driven by said shaft, a withdrawal rod, means for adjusting said movements independently of each other and a continuously adjustable differential gear to transmit the cam motions to the said withdrawal rod, the said last recited gear comprising a compensating lever rotatably mounted on the main shaft of the machine, a bevel gear mounted at one end of said compensating lever, a pair of bevel gear sectors mounted so as to be pivotable about said main shaft and in mesh with said bevel gear, the other end of said compensating lever carrying said withdrawal rod, and means for adjusting the amplitude of the pivotal movements of said two bevel gear sectors from zero to a maximum value.

2. A press as defined in claim 1, wherein the infinitely variable adjustment of the pressing distances is obtained by an adjustment of the length of a crank which is adapted to pivot said compensating lever.

3. A press as defined in claim 1, wherein the infinitely variable adjustment of the withdrawl movements of said withdrawal rod is produced by varying the position of said compensating lever under spring action and by adjusting the vertical position of a threaded member pressing upon the free end of said compensating lever through a threaded spindle by turning a bevel gear pinion connected to said member.

4. A press as defined in claim 1, wherein the infinitely variable adjustment of the premolding movements is produced by varying the position of said compensating lever and the withdrawal rod thereon by pivoting a cam on one of said bevel gear sectors, whereby, through the engagement of a cam with an anvil on said bevel gear sector, the lever engaging the withdrawal cam pivots downwardly a distance in accordance with the distance of the premolding movement as adjusted, and lifts the roller on said lever from engagement with said withdrawal cam.

5. A press as defined in claim 4, wherein a premolding cam is provided on the cam shaft and extending on said withdrawal cam along a certain distance of the rotary movement of said main shaft, said premolding cam because of the engagement of the cam on said anvil being adapted to pivot the bevel gear sector with the cam thereon downwardly against the action of a compression spring of the adjusting means for the premolding operation, and thus carrying out a movement opposed to the movement of the bevel gear sector thereof, whereby the bevel gear pinion rolls along between these bevel gear sectors without affecting the compensating lever which is already in the angular position of 255° because of the premolding as adjusted, to carry out any further movement.

References Cited in the file of this patent

UNITED STATES PATENTS

298,646	Whittaker	May 13, 1884
312,066	Balson	Feb. 10, 1885
389,334	Smith et al.	Sept. 11, 1888
685,536	Stanley	Oct. 29, 1901
2,449,515	Seelig	Sept. 14, 1948
2,499,980	Stokes	Mar. 7, 1950
2,682,080	Saalfrank	June 29, 1954

FOREIGN PATENTS

324,259	Great Britain	Jan. 23, 1930