J. T. RYDBERG.

ENGINE CONSTRUCTION.

APPLICATION FILED OCT. 9, 1911.

1,038,970. Patented Sept. 17, 1912.

2 SHEETS—SHEET 1.

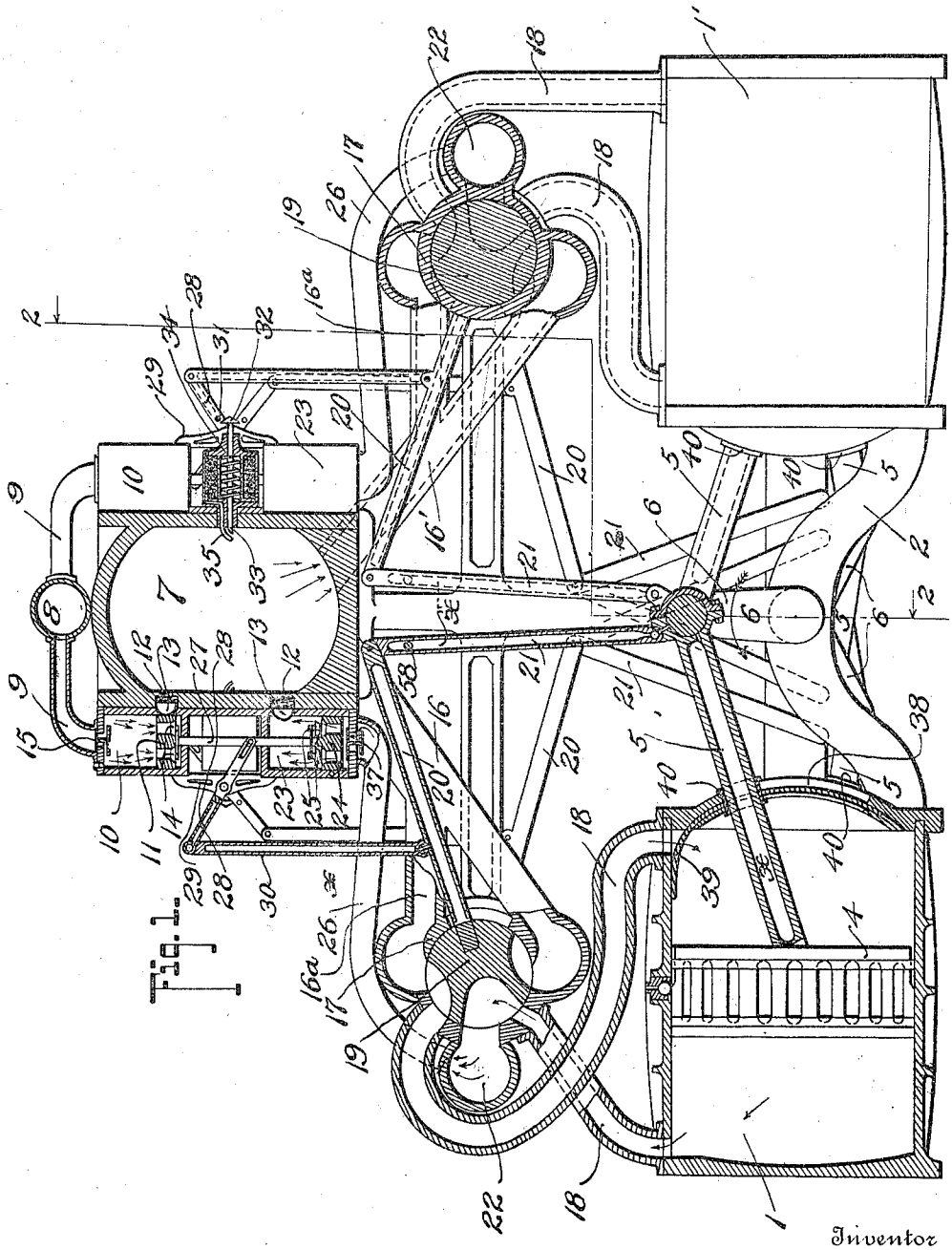

Fig. 1.

Inventor

John. T. Rydberg

Witnesses

C. H. Wagner.

E. Larson

By Beeler & Robb

J. H. Robb

Attorneys.

J. T. RYDBERG.

ENGINE CONSTRUCTION.

APPLICATION FILED OCT. 9, 191

1,038,970.

Patented Sept. 17, 1912.

2 SHEETS—SHEET 2.

Fig. 2.

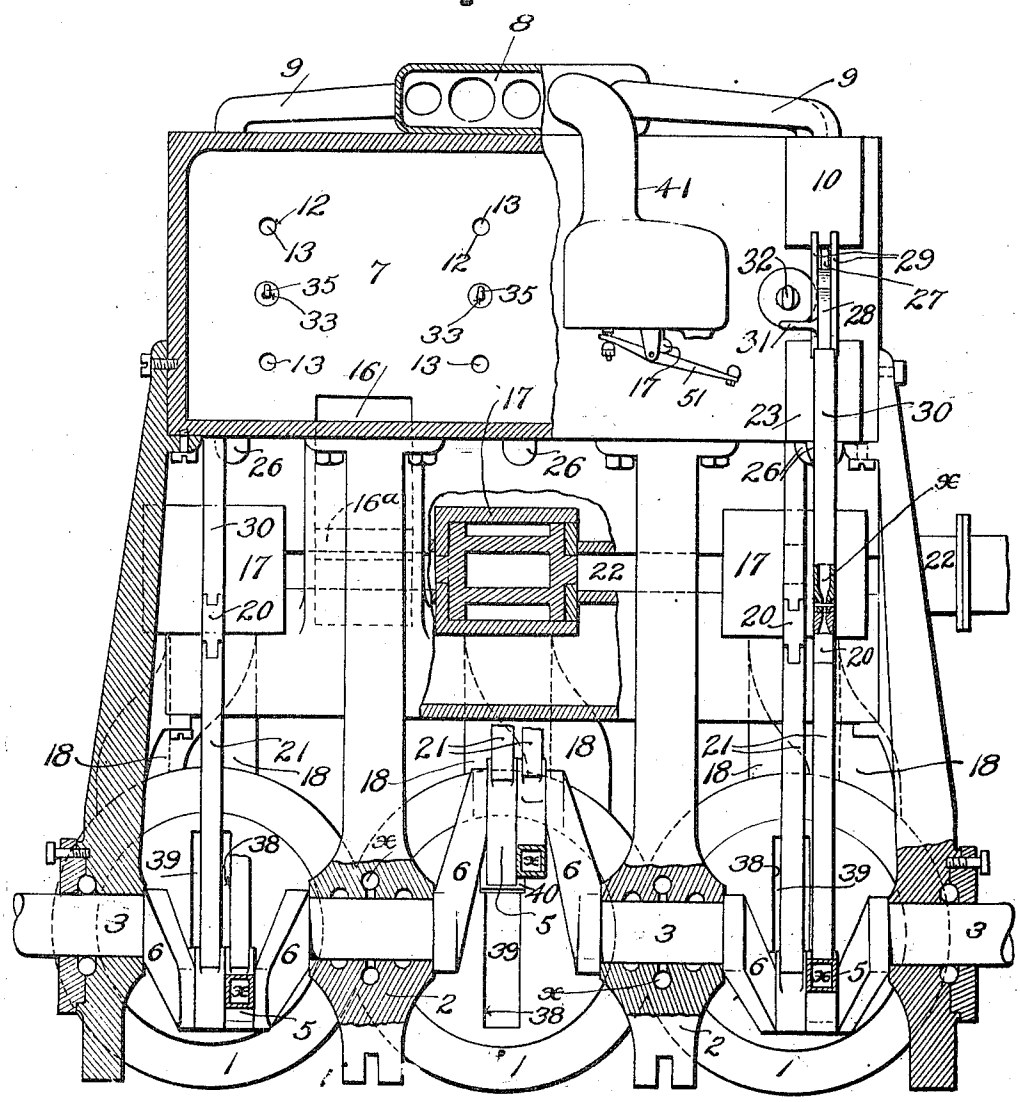

Witnesses

E. H. Wagner.

E. Larson.

Inventor

John T. Rydberg

By Richard Robb

Attorneys.

UNITED STATES PATENT OFFICE.

JOHN T. RYDBERG, OF GARWOOD, NEW JERSEY.

ENGINE CONSTRUCTION.

1,038,970. Specification of Letters Patent. Patented Sept. 17, 1912.

Application filed October 9, 1911. Serial No. 653,647.

To all whom it may concern:

Be it known that I, JOHN T. RYDBERG, citizen of the United States, residing at Garwood, in the county of Union and State of New Jersey, have invented certain new and useful Improvements in Engine Construction, of which the following is a specification.

The present invention comprises an engine or motor designed particularly with a view of obtaining a maximum amount of power at the expense of a minimum amount of motive fluid.

A further object of the invention has been to construct an engine adapted especially for use in operating vehicles, or the like, and which may be started without preliminary manual effort such as cranking, the expedient usually resorted to for engines of this type.

More specifically, an engine comprising the improvements of this invention embodies a crank shaft having at least three cranks, though five, seven, or more may be employed, said cranks being so arranged as not to arrive at a dead-center when the motor stops, and being connected with pistons mounted in cylinders on opposite sides of each crank. A fuel chamber is provided in which the fuel, as an explosive mixture, may be exploded, or which may receive a motive fluid such as compressed air, steam, or the like, suitable connections leading from the fuel chamber to the various cylinders to supply the motive fluid to the latter at opposite sides of their pistons. The pistons furthermore, are directly connected with the cranks of the crank shafts by pitman rods which are adapted for oscillatory movement though passing through adjacent ends of the cylinders, the latter having peculiar automatically operating closures for the openings through which the pitman rods pass into the cylinders.

The invention resides further in the provision of peculiar means controlling the admission of the fuel to the fuel chamber, said means being adapted to control also a passage leading to exhaust compartments, whereby when the motive fluid used in the engine is of an explosive nature, a portion, or all of the exhaust products passing to the exhaust compartments may be forced back into the fuel channels in their heated condition for admixture with the fresh fuel introduced in said chamber, thereby raising the temperature of the latter and assisting in thorough combustion when exploded.

The invention involves in addition to the foregoing a special formation of the connecting rods, levers, etc., between the moving parts of the machine, whereby said parts are rendered self-oiling or constitute conduits through which a lubricant may pass to desired points of distribution. Included also in the invention is a sparking mechanism for exploding the fuel admitted to the fuel chamber when the same is of an explosive nature, said sparking mechanism being associated peculiarly in a coöperative manner with valve means controlling the admission and exhaust of the fuel with respect to the cylinders.

For a full understanding of the present invention, reference is to be had to the following description and to the accompanying drawings, in which—

Figure 1 is a vertical sectional view of an engine embodying the essential features of the present invention, certain portions of the construction being shown in side elevation. Fig. 2 is an end view of the engine showing the fuel chamber broken away to bring out the interior arrangement of parts and other portions being shown in section or broken away to more fully illustrate the details of construction.

Throughout the following detail description and on the several figures of the drawings, similar parts are referred to by like reference characters.

The preferred form of the invention is illustrated in the drawings but it is to be understood that the exact arrangement and construction of the parts may be modified considerably without departing from the principle of operation incidental to the machine as shown.

1 denotes a series of cylinders which are arranged in spaced relation to a second series 1′, the latter being opposed in their arrangement with respect to the first mentioned cylinders. Preferably, the cylinders 1 and 1′ are connected by brackets or yokes 2 which are supplied with suitable bearings supporting the crank shaft 3. Pistons 4 are mounted in the respective cylinders 1 and 1′, and are connected by pitman rods 5 with

the cranks 6 of the shaft 3. It is to be noted that the cranks 6 are so arranged with respect to their relative angular disposition, as to prevent the engine from stopping at a dead-center, this being essential in order that the motor may be started merely by the admission of the motive fluid to the cylinders, the necessity of manual starting being thus obviated with resultant advantages.

A fuel chamber 7 is provided and fuel is supplied thereto through the manifold 8, the branch pipes 9 of which are connected to a series of supply chambers or cylinders 10 located on opposite sides of the chamber 7. In the supply cylinders 10 are arranged pistons 11, which form a part of the pumping mechanisms by which fuel is forcibly introduced into the chamber 7 through inlet openings 12 controlled by the inwardly opening valves 13. The pistons 11 are provided with the downwardly opening valves 14 and other valves 15 are located at the points of connection of the pipes 9 with the cylinders 10 for operation in a manner readily apparent.

Leading from the fuel chamber 7 are the supply pipes 16 for the cylinders 1 and the similar supply pipes 16′ for the cylinders 1′. The pipes 16 and 16′ are in communication with valve chambers 17, one of which is provided for each cylinder and the valve chambers 17 of each set of cylinders are connected by the combined inlet and exhaust pipes 18 with the opposite ends of adjacent cylinders 1 and 1′. That is to say, two of the pipes 18 extend from each valve chamber 17 and lead to the opposite ends of the cylinder, the admission and exhaust of which are to be controlled by the valve in said chamber. The valves in the chambers 17 are shown at 19 and are preferably of the rotary three-way type. Arms 20 extend from the valves 19, preferably inwardly, to points beneath the chamber 7, and each arm 20 is connected by a rod 21 with the adjacent crank located below said arm. The exhaust passage 22 connects the several valve chambers 17 and consists of a pipe which may have an opening communicating with the exterior atmosphere. One of the passages 22 is provided for each set of chambers 17 at each end of the motor. On opposite sides of the fuel chamber 7, and located preferably beneath the cylinders 10, are other cylinders 23 which form auxiliary exhaust supply chambers and are in communication with the chamber 7 by means of inlet openings 12 and valves 13 similar to those hereinbefore described. Furthermore, pistons 24, similar to the pistons 11, operate in the cylinders 23 and have upwardly opening valves 25 controlling the openings through said pistons.

The set of cylinders 23 corresponds to the arrangement of the cylinders 10, and each cylinder 23 is connected by a pipe or equivalent passage 26 with the exhaust pipe 22 at the adjacent end of the motor. Connecting the adjacent pistons 11 and 24 are the rods 27 by which said pistons are adapted to be simultaneously operated. Levers 28 are connected at their inner ends with the rods 27 and are pivoted intermediate their ends to brackets 29. Each lever 28 has its outer end pivotally connected by a rod 30 to the arm 20 of the adjacent valve 19 so that the various controlling parts of the engine are connected together for a proper correspondence of movement, whereby the working of said parts is timed to insure the efficient operation of the motor.

Extending laterally from the levers 28 are projections or pins 31 adapted to engage with anvils 32 carried by the outer ends of the movable electrode 33 which is employed for coöperation with the stationary spark point 35, and during the movement of the lever 28, it will be apparent that the projection, by engagement with the anvil 32, will so actuate the electrode 33 as to cause a spark at the point 35 when the circuit including the spark plug is closed. A spring 36, which is housed in a tubular portion or core of the spark plug normally tends to force the electrode 33 outwardly and hold the same at its outer limit of movement.

The main working parts of the engine have now been described, and the operation of said parts briefly, is as follows: Fuel passing from the carbureter to the manifold 8 is conducted by the branch pipes 9 to the cylinders 10 and the pumping means comprising the pistons 11 and 24 controls the introduction of said fuel into the chamber 7. Obviously, on the up-stroke of the pistons 11 and 24, the valves 14 are opened, the valve 15 is closed, and the valves 25 are closed so that in the cylinder 10, the fuel passes through the openings in the piston 14 to the opposite side of said piston, while the piston 24 is drawing a portion of the exhaust products from the pipe 22 into the lower portion of the cylinder 23. Said piston 24 is also forcing a charge of said exhaust products previously passing through the openings in said piston, from the cylinder 23 into the chamber 7. A valve 37 controls the passage of the exhaust products from each pipe 26 into its adjacent cylinder 23 and opens upwardly as the piston 24 moves upward. On the down-stroke of the pistons 11 and 24, the fresh fuel below the piston 11 is forced into the chamber 7 through the opening 12 and mixes with the heated exhaust products and any remaining portion of an exploded mixture already in said chamber. Of course, as the piston 24 moves downwardly, the exhaust products previously drawn into the lower portion of

the cylinder 23 pass by the valves 25 into the upper portion of said cylinder.

From the foregoing, the operation of the pumping means controlling the introduction into the chamber 7 of the fresh fuel and heated exhaust products, will be understood and circuits including the spark plugs 34 are so timed that a spark or sparks will be produced at the points 35 at predetermined intervals to explode the mixture in the chamber 7. The fuel, when exploded in the chamber 7 is, of course, expanded and it is conducted to the cylinders 1 and 1′ by the supply pipes 16 and the combined inlet and exhaust pipes 18, such passage being, of course, controlled by the valves 19. For instance, as each crank arm 6 moves upwardly, it raises the rods 21 connected thereto and imparts corresponding movement to the arms 20, rotating the valves 19 until the latter connects the outermost pipe 18 with the exhaust and simultaneously connects a branch supply pipe 16^a with the other pipe 18, as shown most clearly in Fig. 1. Thus, when the valve 19 is in the position shown at the left in Fig. 1, the piston 4 is moving outwardly and the motive fluid at the outer side of said piston is exhausting from said cylinder through the outer pipe 18 and the pipes 22 and 26. Meanwhile, the motive fluid is passing into the inner end of the cylinder 1 through the pipes 16, its branch 16^a and the pipe 18 directly connected to said portion of the cylinder.

The arrangement of the levers 28 is such that the projections 31 will strike the anvils 32 with which they coöperate both on the upward and downward movements of said levers, for which reason the anvils 32 have oppositely inclined impingement surfaces.

Since the pitman rods 5 are directly connected with the cranks 6 and the pistons 4, it will be apparent that they have an oscillatory movement, for which reason, it is necessary to provide on the inner ends of the cylinders 1 and 1′ vertical elongated openings or slots 38. Since, however, the motive fluid is introduced into the cylinders 1 and 1′ between the inner ends of the latter and the pistons, it is necessary to provide a closure for the openings 38, normally rendering the cylinders aforesaid air-tight. For the above purpose, sliding closing plates 39 are employed, the same having their opposite edges arranged in grooves in the slotted ends of the cylinders 1 and 1′, said plates 39 normally closing the openings 38. The oscillating pitman rods 5, however, pass through the closing plates 39 either directly, or through bushings 40 carried by said plates, the members 5, of course, being adapted to slide longitudinally through the members 39 as the former oscillate during the rotation of the crank shaft.

The carbureter used in connection with the invention is shown at 41 provided with a throttle lever 51 adapted to be controlled in any suitable manner, and an adjustable screw 47 for regulating the internal mechanism of the carbureter. The specific structure of the latter forms, however, no part of the present invention.

The oiling system hereinbefore referred to is provided primarily by forming the various rods 5, 21 and 13 and the levers 28 and arms 20 with hollow portions, or in other words, by using tubular parts, whereby these parts are strengthened and the tubular portions constitute lubricant passages designated x. It is contemplated that where the members are joined together ball and sockets or similar pivotal connections will be provided, the same having lubricant openings therethrough so as to permit of passage of the lubricant to the part which is to be oiled. Any one or more of the tubular members above referred to may furthermore be provided with filling openings, as shown at 58.

By the provision of the peculiar lubricating parts, as above described, it will be apparent that the necessity of special oiling connections, devices, or the like, is entirely eliminated.

In regard to the general design of the engine or motor above described, it will furthermore be appreciated that the various valve parts and piston operating means are so arranged and connected that their operation may be accurately timed by initial adjustment and there is no necessity of further adjustment, such as incidental to the operation of ordinary explosive engines. Furthermore, there is no possibility, when an explosive fluid medium is employed, of back-firing or inadequate lubrication. The fuel chamber 7 is, of course, always filled with an exploded fuel, or other fluid medium under pressure, which is ready to be supplied to the various cylinders 1 and 1′ as the valves 19 successively operate for this purpose. While the upper pumping pistons 11 are utilized primarily for introducing a fresh supply of fuel into the chamber 7, the lower pistons 24 perform a double function by withdrawing the exhaust products from the cylinders 1 and 1′ and forcing a certain portion of the same into the chamber 7 for the purpose hereinbefore described.

Notwithstanding the advantageous arrangement of parts and details of construction of the present motor as above set forth, in a general way the engine is possessed of extreme simplicity as compared with motors most commonly in use at this time.

Having thus described the invention, what is claimed as new is:

1. In a motor of the class described, a plurality of cylinders and a piston for each cylinder, a crank shaft and connections there-

between and the pistons, valve mechanism for each cylinder, means for operating said valve mechanism actuated by the movement of the respective pistons, a fuel chamber, connections between the valve mechanism and the cylinders and between the valve mechanism and fuel chamber whereby a fluid pressure medium may be alternately supplied to opposite portions of each cylinder and exhaust may be conducted to the fuel chamber from the cylinders, and pumping mechanism for supplying fresh fuel and exhaust to the fuel chamber.

2. In a motor of the class described, a plurality of cylinders and a piston for each cylinder, a crank shaft and connections therebetween and the pistons, valve mechanism for each cylinder, means for operating said valve mechanism actuated by the movement of the respective pistons, a fuel chamber disposed above said cylinders, connections between the valve mechanism and cylinders and between the valve mechanism and the fuel chamber whereby a fluid pressure medium may be alternately supplied to opposite portions of each cylinder and exhaust may be conducted to the fuel chamber from the cylinders, pumping mechanism for supplying fresh fuel and exhaust to the fuel chamber, means for operating said pumping mechanism operable from said valve operating means, and means for igniting a charge of fuel in the fuel chamber also operable from said valve operating means.

3. In a motor of the class described, the combination of a crank shaft, cylinders arranged at opposite sides of said shaft in opposed relation, pistons in said cylinders, connections between the pistons and the crank shaft, valves adjacent to the cylinders and controlling the passage of a pressure medium thereto, rods movable on the movement of the pistons for operating said valves, a fuel chamber, passages connecting said fuel chamber with said cylinders to supply fluid pressure to the same, and means for conducting the exhaust from the cylinders to the fuel chamber.

4. In a motor of the class described, the combination of a crank shaft, cylinders arranged at opposite sides of said shaft in opposed relation, pistons in said cylinders, connections between the pistons and the crank shaft, valves adjacent to the cylinders and controlling the passage of a pressure medium thereto, rods movable on the movement of the pistons for operating said valves, a fuel chamber, passages connecting said fuel chamber with said cylinders to supply fluid pressure to the same, means for conducting the exhaust from the cylinders to the fuel chamber, said means including portions of said last named passages, pumping mechanism adapted to force fresh fuel into the fuel chamber, and rods for operating said pumping mechanism operable from said valve operating rods.

5. In a motor of the class described, the combination of two sets of cylinders spaced apart, a fuel chamber arranged above the space between the cylinders, a crank shaft, a piston in each cylinder and connections between the pistons and crank shaft, combined inlet and exhaust pipes communicating with the cylinders at opposite ends thereof to supply the pressure medium to opposite sides of the pistons therein, valve means controlling the supply and exhaust of the fluid pressure medium through said pipes, rods directly connecting the crank shaft with said valves for controlling the operation of the latter, pumping mechanism for supplying the fluid pressure medium to the fuel chamber, means for operating said pumping mechanism from the crank shaft, and passages connecting said valve means with said fuel chamber to conduct the exhaust to the latter.

6. In a motor of the class described, the combination of a plurality of cylinders, pistons operating therein, a crank shaft, connections between the cranks of the shaft and the pistons, a fuel chamber, valve chambers, combined inlet and exhaust pipes connecting the valve chambers with the cylinders to supply a fresh medium to the latter at opposite sides of their pistons, supply pipes connecting the fuel chamber and valve chambers, an exhaust pipe connected with the valve chambers, pumping mechanism adapted to force fresh fuel and a portion of the exhaust from the cylinders into the fuel chamber, connections between the exhaust pipe and said pumping mechanism, valves in said valve chambers for controlling the inlet and exhaust action of the inlet and exhaust pipes and also for controlling the communication of the supply pipes with the valve chambers, arms extending from said valves, rods connecting said arms with the crank arms, levers for operating the pumping mechanism, and rods connecting said valve arms with said levers.

7. In a motor of the class described, the combination of a plurality of cylinders, pistons operating therein, a crank shaft, connections between the cranks of the shaft and the pistons, a fuel chamber, valve chambers, combined inlet and exhaust pipes connecting the valve chambers with the cylinders to supply a fresh medium to the latter at opposite sides of their pistons, supply pipes connecting the fuel chamber and valve chambers, an exhaust pipe connected with the valve chambers, pumping mechanism adapted to force fresh fuel and a portion of the exhaust from the cylinders into the fuel chamber, connections between the exhaust pipe and said pumping mechanism, valves

in said valve chambers for controlling the inlet and exhaust action of the inlet and exhaust pipes and also for controlling the communication of the supply pipes with the valve chambers, arms extending from said valves, rods connecting said arms with the crank arms, levers for operating the pumping mechanism, and rods connecting said valve arms with said levers, and exploding means coöperating with the fuel chamber and operable by the levers aforesaid.

8. In a motor of the class described, the combination of a plurality of cylinders, pistons operating therein, a crank shaft, connections between the cranks of the shaft and the pistons, a fuel chamber, valve chambers, combined inlet and exhaust pipes connecting the valve chambers with the cylinders to supply a fresh medium to the latter at opposite sides of their pistons, supply pipes connecting the fuel chamber and valve chambers, an exhaust pipe connected with the valve chambers, pumping mechanism adapted to force fresh fuel and a portion of the exhaust from the cylinders into the fuel chamber, connections between the exhaust pipe and said pumping mechanism, valves in said valve chambers for controlling the inlet and exhaust action of the inlet and exhaust pipes and also for controlling the communication of the supply pipes with the valve chambers, arms extending from said valves, rods connecting said arms with the crank arms, levers for operating the pumping mechanism, and rods connecting said valve arms with said levers, and exploding means carried by the fuel chamber and comprising a movable electrode, and a member carried by each lever for engaging and actuating said electrode.

9. In a motor of the class described, the combination of a crank shaft, cylinders arranged at opposite sides of said shaft in opposed relation, pistons in said cylinders, connections between the pistons and the shaft, valves adjacent to the cylinders and controlling the passage of a pressure medium thereto, arms extending from said valves toward each other, and rods connected to the adjacent ends of said arms and to the shaft and operable by the latter in its movement.

10. In a motor of the class described, the combination of a crank shaft, cylinders arranged at opposite sides of said shaft in opposed relation, pistons in said cylinders, connections between the pistons and the shaft, valves adjacent to the cylinders and controlling the passage of a pressure medium thereto, arms extending from said valves toward each other, rods connected to the adjacent ends of said arms and to the shaft and operable by the latter in its movement, a fuel chamber, supply pipes leading therefrom for passage of a fluid pressure medium to the cylinders, exploding devices coöperating with the fuel chamber, and connections between said devices and the valve mechanisms whereby the former are operated from the latter.

11. In a motor of the class described, the combination of a crank shaft, cylinders arranged at opposite sides of said shaft in opposed relation, pistons in said cylinders, connections between the pistons and the shaft, valves adjacent to the cylinders and controlling the passage of a pressure medium thereto, arms extending from said valves toward each other, rods connected to the adjacent ends of said arms and to the shaft and operable by the latter in its movement, exploding devices supported on the sides of the fuel chamber, levers for operating said exploding devices, and connections between said levers and valve arms.

12. In a motor of the class described, the combination of a crank shaft, cylinders arranged at opposite sides of said shaft in opposed relation, pistons in said cylinders, connections between the pistons and the shaft, valves adjacent to the cylinders and controlling the passage of a pressure medium thereto, arms extending from said valves toward each other, rods connected to the adjacent ends of said arms and to the shaft and operable by the latter in its movement, exploding devices supported on the sides of the fuel chambers, levers for operating said exploding devices, connections between said levers and valve arms, and pumping mechanisms carried by the sides of the fuel chamber and also operable by said levers.

13. In an explosive motor, the combination of spaced series of opposed cylinders, a crank shaft therebetween, pistons in the cylinders, pitman rods extending from opposite sides of the shaft and connecting its cranks with the respective pistons, a fuel chamber arranged above the space between the cylinders, valve chambers arranged above the cylinders of each series, pipes connecting said valve chambers with the respective cylinders, other pipes connecting said chambers with the fuel chamber, an exhaust pipe connected with the valve chambers, coöperating with each series of cylinders, valves arranged in the valve chambers, operating arms attached to said valves and extending toward the fuel chamber, connecting rods between the arms and cranks of the shaft whereby as the shaft rotates the valves are actuated, pumping means on opposite sides of the fuel chamber, levers for actuating said pumping means, and connections between the levers of the pumping mechanisms on each side of the fuel chamber and the arms of the adjacent valves, whereby the movement communicated to the latter is transmitted to the pumping mechanisms.

14. In an explosive motor, the combination of spaced series of opposed cylinders, a crank shaft therebetween, pistons in the cylinders, pitman rods extending from opposite sides of the shaft and connecting its cranks with the respective pistons, a fuel chamber arranged above the space between the cylinders, valve chambers arranged above the cylinders of each series, pipes connecting said valve chambers with the respective cylinders, other pipes connecting said chambers with the fuel chamber, an exhaust pipe connected with the valve chambers coöperating with each series of cylinders, valves arranged in the valve chambers, operating arms attached to said valves and extending toward the fuel chamber, connecting rods between the arms and cranks of the shaft whereby as the shaft rotates the valves are actuated, pumping means on opposite sides of the fuel chamber, levers for actuating said pumping means, connections between the levers of the pumping mechanisms on each side of the fuel chamber and the arms of the adjacent valves, whereby the movement communicated to the latter is transmitted to the pumping mechanisms, fuel supply means connected with the pumping mechanisms, and pipes connecting the exhaust pipes to said pumping mechanisms, whereby as the engine operates, the pumping mechanisms are adapted to force fresh fuel and exhaust products into the fuel chamber.

15. In a motor of the class described, the combination of a plurality of cylinders, pistons operating therein, a crank shaft, connections between the cranks of the shaft and the pistons, a fuel chamber, valve chambers, combined inlet and exhaust pipes connecting the valve chambers with the cylinders to supply a fresh medium to the latter at opposite sides of their pistons, supply pipes connecting the fuel chamber and valve chambers, an exhaust pipe connected with the valve chambers, pumping mechanism adapted to force fresh fuel and a portion of the exhaust from the cylinders into the fuel chamber, connections between the exhaust pipe and said pumping mechanism, valves in said valve chambers for controlling the inlet and exhaust action of the inlet and exhaust pipes and also for controlling the communication of the supply pipes with the valve chambers, arms extending from said valves, rods connecting said arms with the crank arms, levers for operating the pumping mechanism, and rods connecting said valve arms with said levers, the aforesaid connecting rods, valve arms and levers being hollow so as to form lubricant chambers.

16. In a motor of the class described, the combination of cylinders, pistons therein, a crank shaft, pitman rods connecting the rods of said shaft and the pistons, valves controlling the inlets and exhaust of the cylinders, arms for said valves, rods connecting the arms and the shaft, said arms connecting rods and pitman rods being hollow to provide lubricant chambers, and the connections between said parts and their adjacent connected parts being so constructed as to permit the flow of lubricant through said connections.

In testimony whereof I affix my signature in presence of two witnesses.

JOHN T. RYDBERG.

Witnesses:
ALFRED NELSON,
FRILIOF ROLF.